ABBREVIATIONS

The following abbreviations are used in this manual.

ABS	=	Anti-Lock Brake System
A/C	=	Air Conditioning
ACIS	=	Acoustic Control Induction System
ACM	=	Active Control Engine Mount
A/T	=	Automatic Transaxle
BA	=	Brake Assist
COMB.	=	Combination
EC	=	Electrochromic
ECU	=	Electronic Control Unit
ESA	=	Electronic Spark Advance
EVAP	=	Evaporative Emission
FL	=	Fusible Link
J/B	=	Junction Block
LH	=	Left-Hand
O/D	=	Overdrive
R/B	=	Relay Block
RH	=	Right-Hand
SFI	=	Sequential Multiport Fuel Injection
SRS	=	Supplemental Restraint System
SW	=	Switch
TEMP.	=	Temperature
TRAC	=	Traction Control
VSC	=	Vehicle Skid Control
VSV	=	Vacuum Switching Valve
VVT	=	Variable Valve Timing
w/	=	With
w/o	=	Without

* The titles given inside the components are the names of the terminals (terminal codes) and are not treated as being abbreviations.

K CONNECTOR LIST

A1
BLACK



A2
GRAY

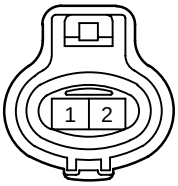

A3
GRAY

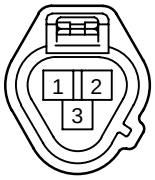

A4
GRAY

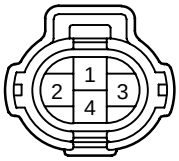

A5
GRAY

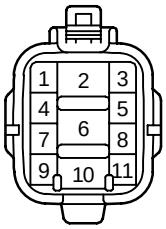

A6
GRAY



A7
BLACK

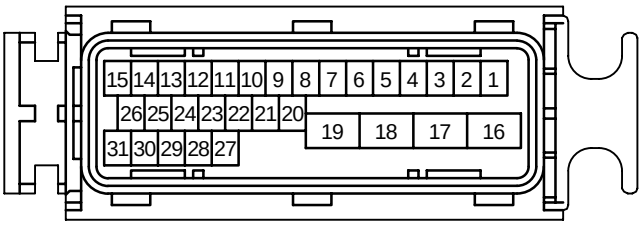

A8
GRAY



A9
GRAY



A10
DARK GRAY



A11
DARK GRAY



A12
YELLOW

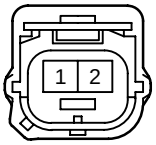

A13
YELLOW

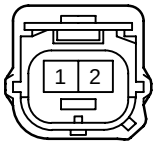

A14
BLACK

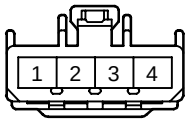

A15

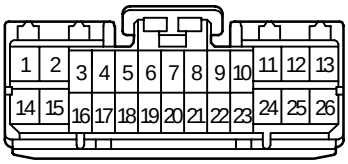

A16

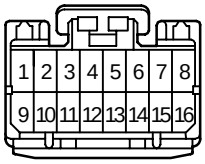

A17
BLACK

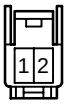

A18
BLACK



A19

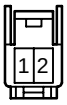

A20

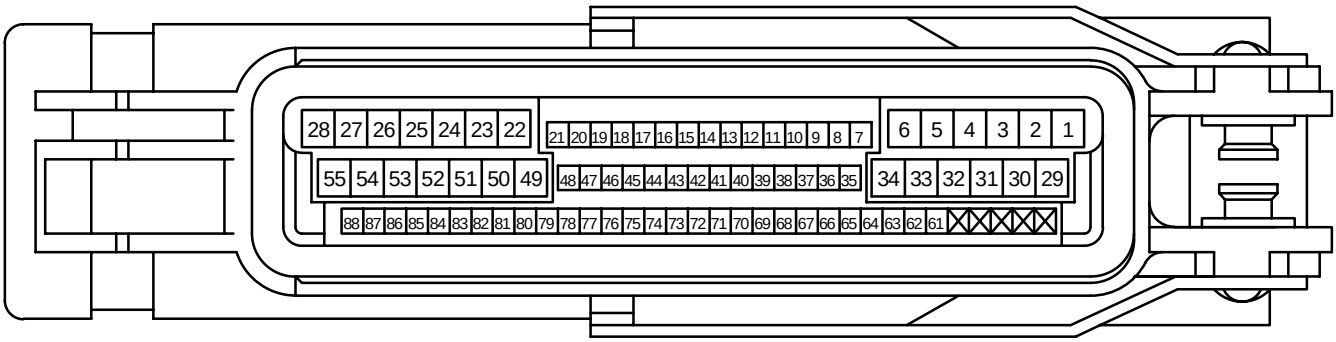

A21

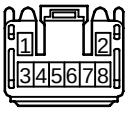

A22

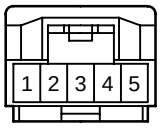

A23

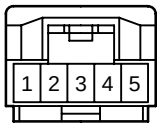

A24

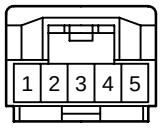

A25
(Automatic A/C)

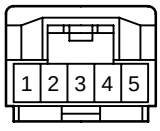

A25
(Manual A/C) BLACK

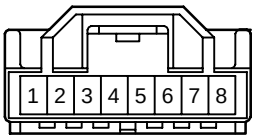

A26
YELLOW

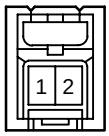

A27
YELLOW

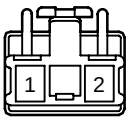

A28
BLACK

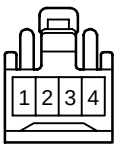

A29



A30



B1
GRAY



B2

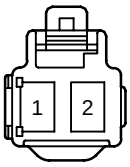

B3
BLACK

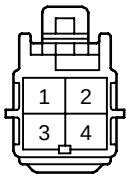

B4

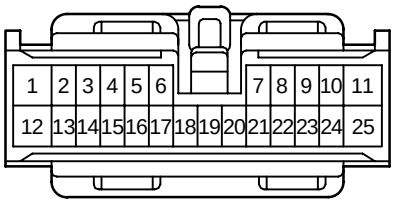

B5

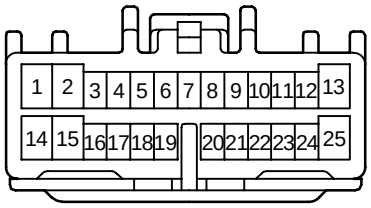

B6

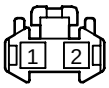

B7

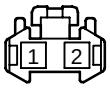

B8

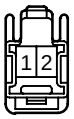

B9

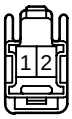

C1
BLACK



C2
BLACK



C3
BLACK



C4
BLACK



C5
YELLOW

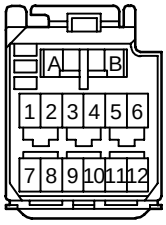

C6
YELLOW

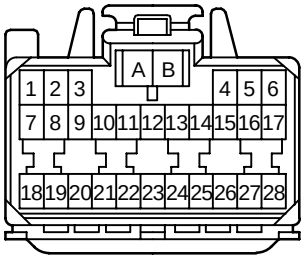

C7
YELLOW

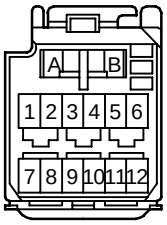

C8

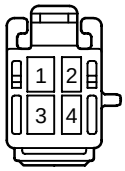

C9

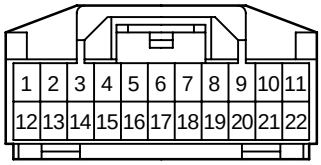

C10

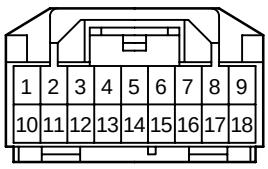

C11

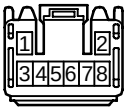

C12
BLACK

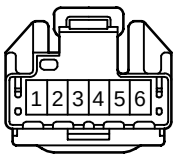

C13

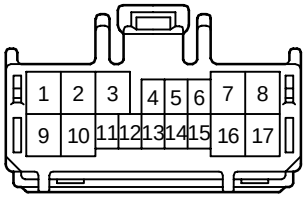

K CONNECTOR LIST

∗ 1 : w/ Driving Position Memory
∗ 2 : w/o Driving Position Memory

C14
BLACK

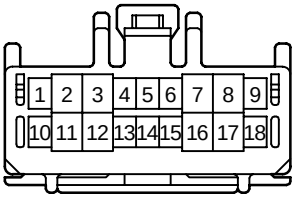

C15

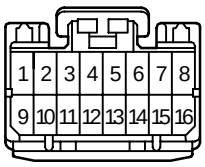

D1
BLACK

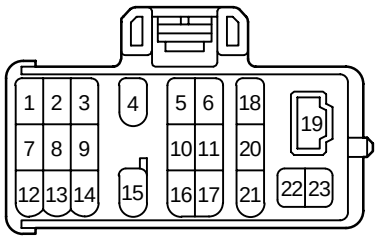

D2
DARK GRAY

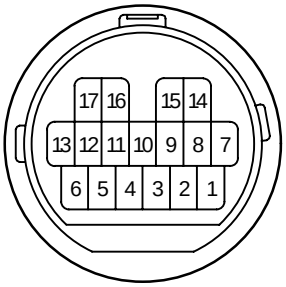

D3

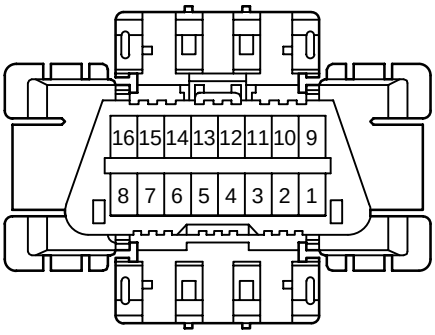

D4
ORANGE

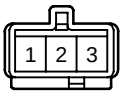

D5
ORANGE

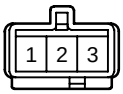

D6
ORANGE

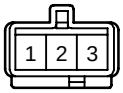

D7
BLACK



D8

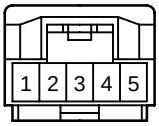

D9
GRAY

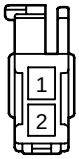

D10
GRAY

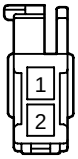

D11



D12



D13



D14



D15
BLACK



D16
BLACK



D17
BLACK

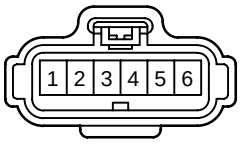

D18
BLACK

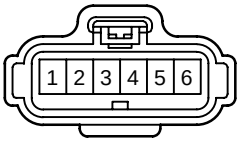

D19
(∗ 1) GRAY

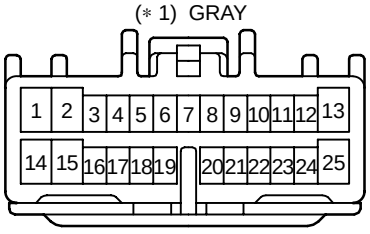

D19
(∗ 2)

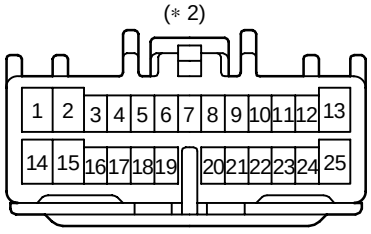

∗ 1 : w/ Driving Position Memory
∗ 2 : w/o Driving Position Memory

E1
GRAY

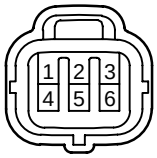

E2
DARK GRAY



E3
BLACK



E4

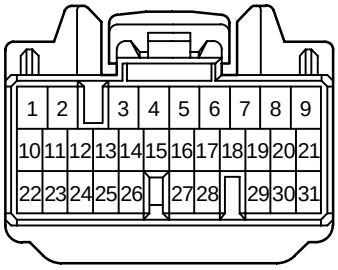

E5

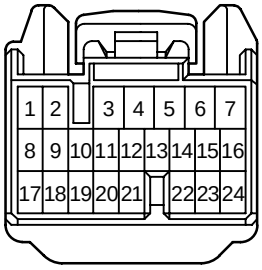

E6

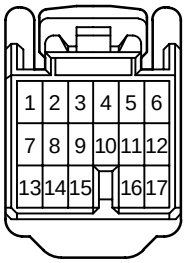

E7

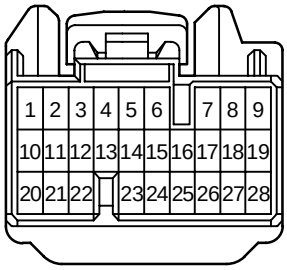

E8

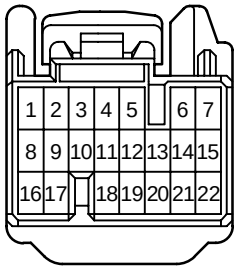

F1
GRAY

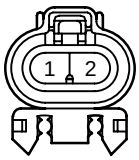

F2
GRAY

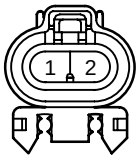

F3
GRAY



F4
GRAY

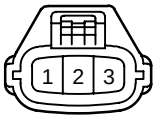

F5
BLACK

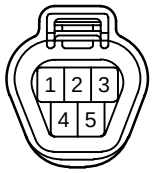

F6

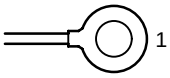

F7

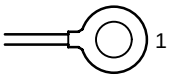

F8

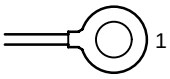

F9

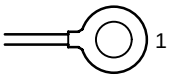

F10

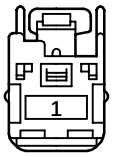

F11

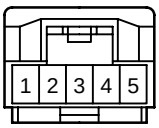

F12



F13

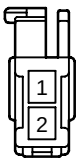

F14
(∗ 1) GRAY

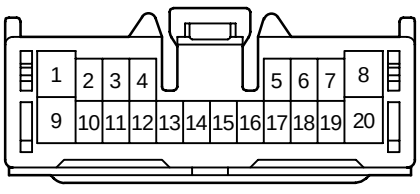

F14
(∗ 2)

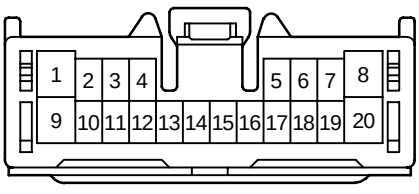

F15



G1
BLACK

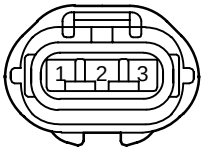

G2

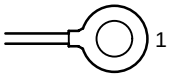

G3
BLACK

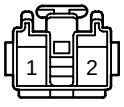

H1
BROWN



K CONNECTOR LIST

H2
BLACK



H3
BROWN

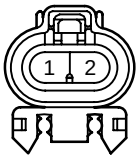

H4
BROWN

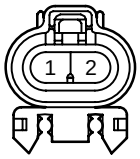

H5
BLACK

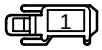

H6
BLACK

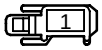

H7
BLACK

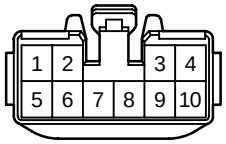

H8
DARK GRAY

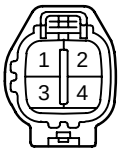

H9

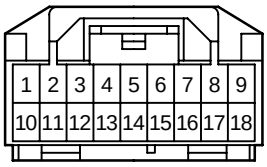

H10

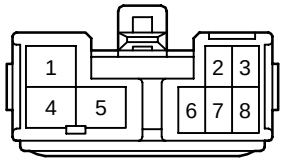

H11



I1
BLACK



I2
BLACK

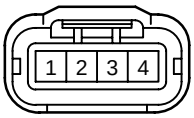

I3
BLACK

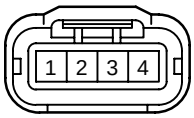

I4
BLACK

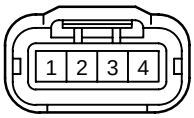

I5
BLACK

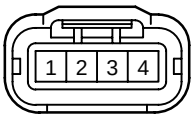

I6
BLACK

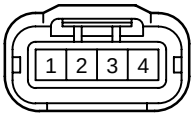

I7
BLACK

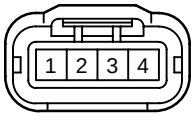

I8
GRAY



I9
GRAY



I10
GRAY



I11
GRAY



I12
GRAY



I13
GRAY



I14

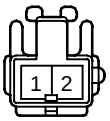

I15

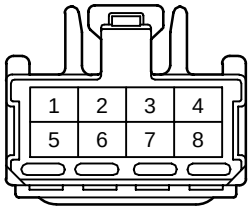

I16
BLACK

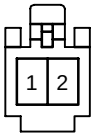

I17

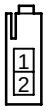

J1
GRAY

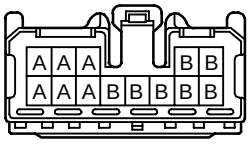

J2
GRAY

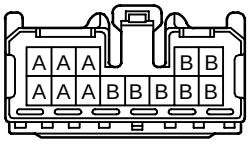

J3
BLUE

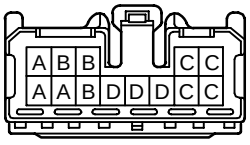

J4
GRAY

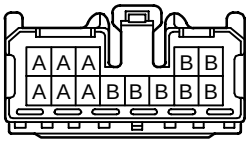

J5

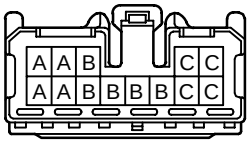

J6

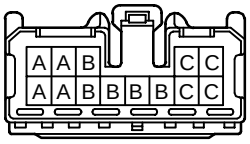

J7
BLACK

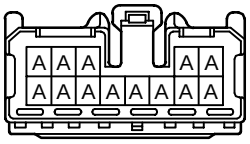

J8
BLUE

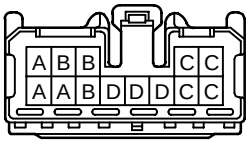

J9

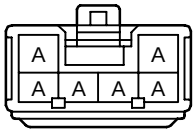

J10

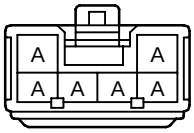

J11

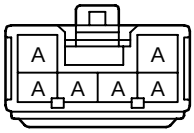

J12

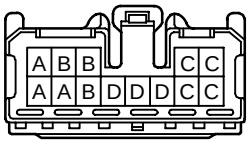

J13



J14

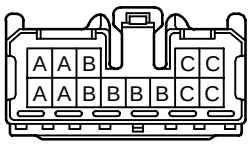

K1
DARK GRAY



K2
DARK GRAY



K3
GRAY

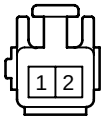

L1
BLACK

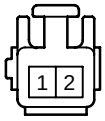

L2
BLACK

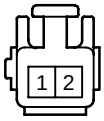

L3

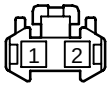

L4

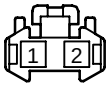

L5

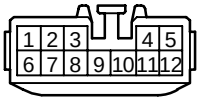

L6

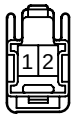

L7
BLACK



L8
GRAY

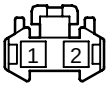

L9
GRAY



L10



L11



M1
BLACK

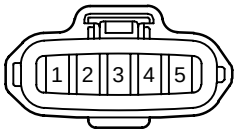

M2
BLACK

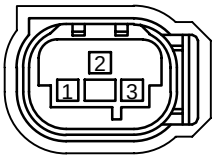

M3

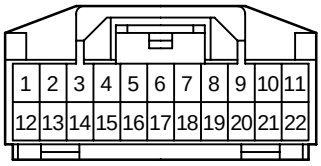

M4

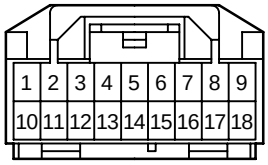

M5
BLACK

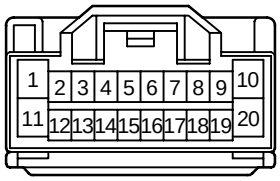

M6
GRAY

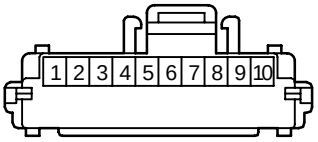

M7

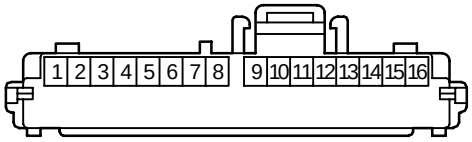

M8

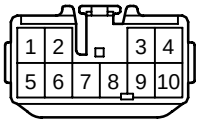

M9
BLUE

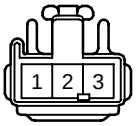

N1
GRAY

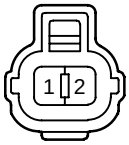

N2

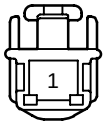

N3

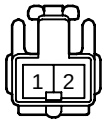

O1
BLACK

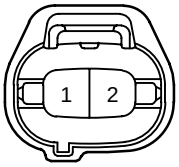

O2
GRAY



O3
(Floor Shift) BLUE

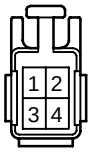

O3
(Columm Shift)

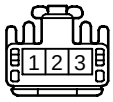

K CONNECTOR LIST

∗ 1 : w/ Driving Position Memory
∗ 2 : w/o Driving Position Memory

P1
GRAY

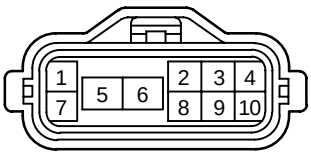

P2
BLACK



P3



P4

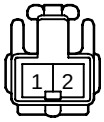

P5



P6



P7



P8

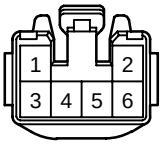

P9

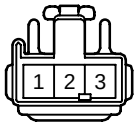

P10

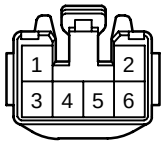

P11

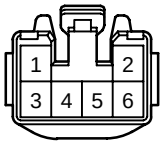

P12

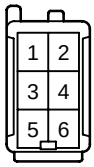

P13

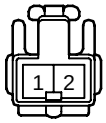

P14

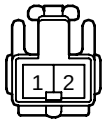

P15

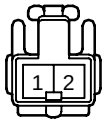

P16
YELLOW

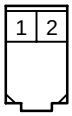

P17
YELLOW

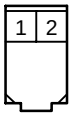

P18
(∗ 1) GRAY

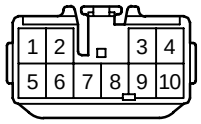

P18
(∗ 2) BLACK

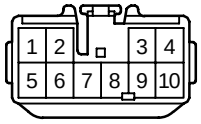

P19

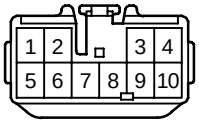

P20

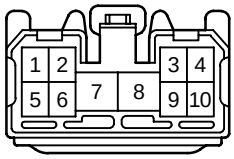

P21

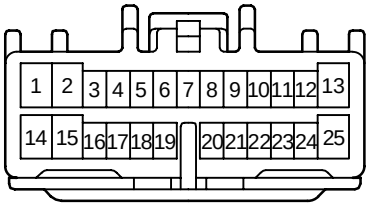

P22
BLUE

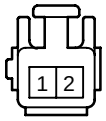

P23
GREEN

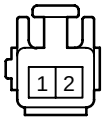

P24

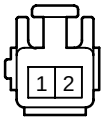

P25
ORANGE

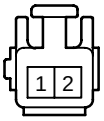

P26
GREEN

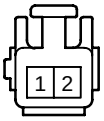

P27

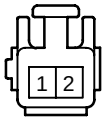

P28
ORANGE

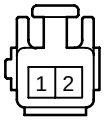

P29
BLUE

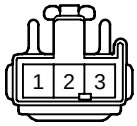

P30
GREEN

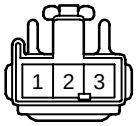

P31

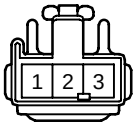

P32
ORANGE

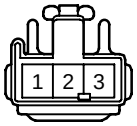

R1
GRAY

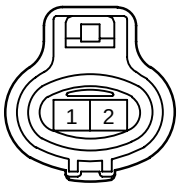

R2

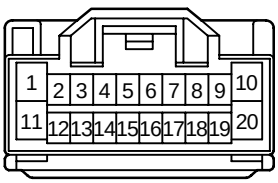

R3

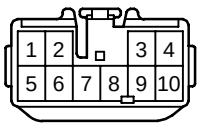

R4



R5
BLACK

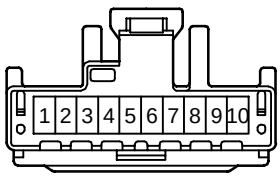

∗ 1 : w/ Driving Position Memory
∗ 3 : w/o Driving Position Memory and w/ Mirror Heater
∗ 4 : w/o Driving Position Memory and w/o Mirror Heater
∗ 5 : Taiwan

R6
BLACK

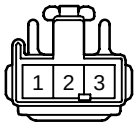

R7

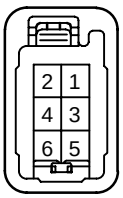

R8

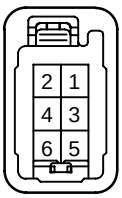

R9



R10



R11

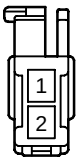

R12

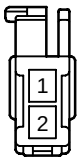

R13
(∗ 1)

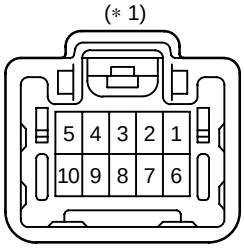

R13
(∗ 3)

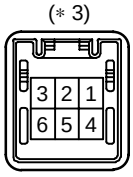

R13
(∗ 4)

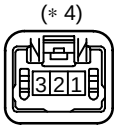

R13
(∗ 5)

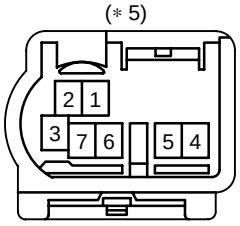

R14
(∗ 1)

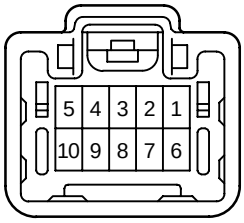

R14
(∗ 3)



R14
(∗ 4)



R14
(∗ 5)

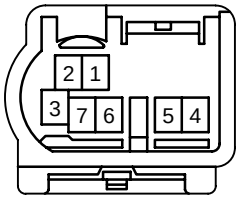

S1
BLACK



S2

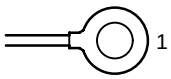

S3
(Floor Shift)

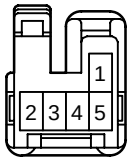

S3
(Column Shift)

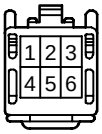

S4
BLUE

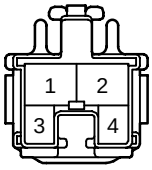

S5
YELLOW

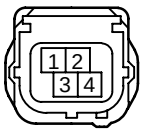

S6
YELLOW

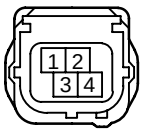

S7
YELLOW



S8
YELLOW



S9
BLACK

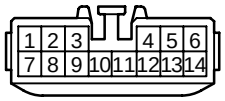

S10
BLACK

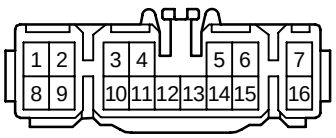

S11
BLACK

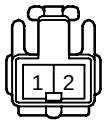

S12

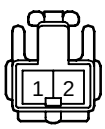

S13

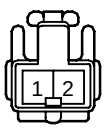

S14

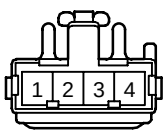

T1
GRAY

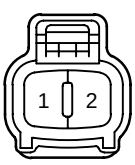

T2
BLACK

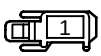

T3
BLACK



K CONNECTOR LIST

T4

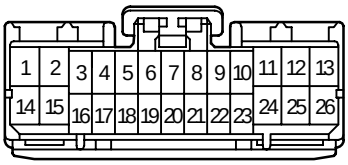

T5

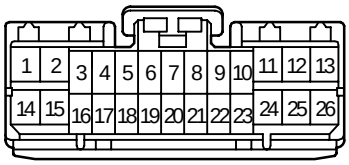

T6

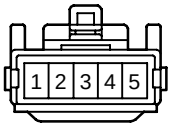

T7

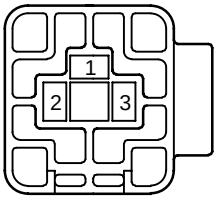

T8

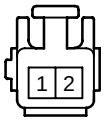

T9

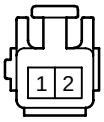

U1

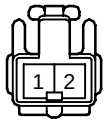

V1
BROWN

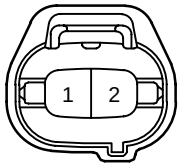

V2
BROWN

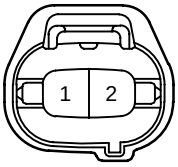

V3
BLUE

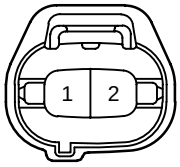

V4
BLACK



V5
BLUE

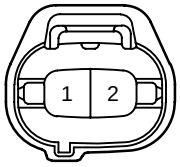

V6
BLACK



V7
GRAY



V8
BLACK

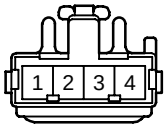

V9
BLACK

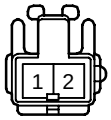

V10



V11



V12
BLACK

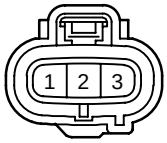

V13
BLUE

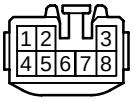

V14
BLUE



W1
BLACK

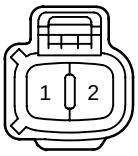

W2
BLACK

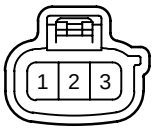

W3
GRAY



W4
GRAY



W5



W6
GRAY

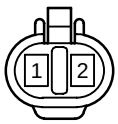

W7



Y1
BLACK

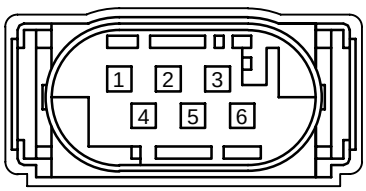

▭ : Location of Connector Joining Wire Harness and Wire Harness

▽ : Location of Ground Points

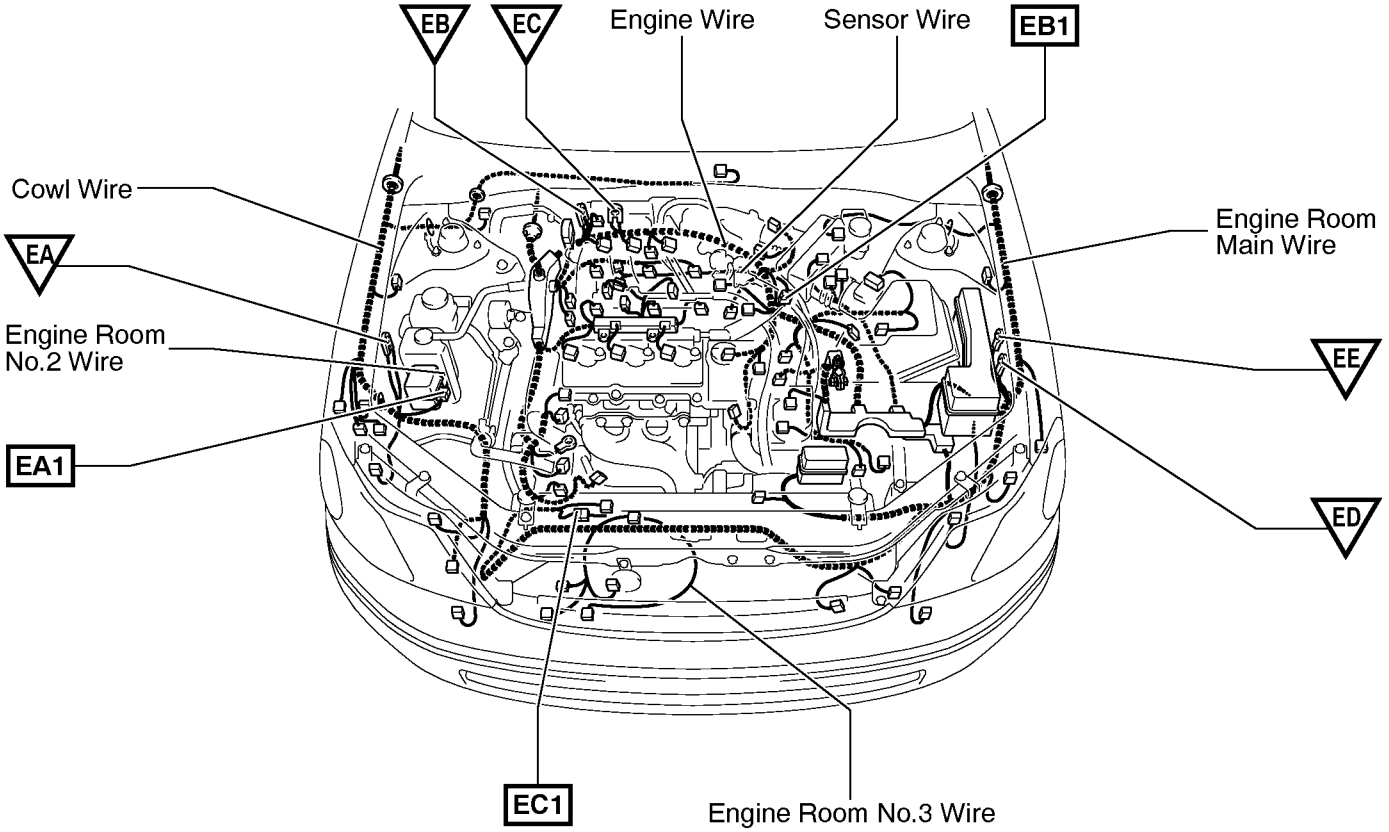

○ : Location of Splice Points

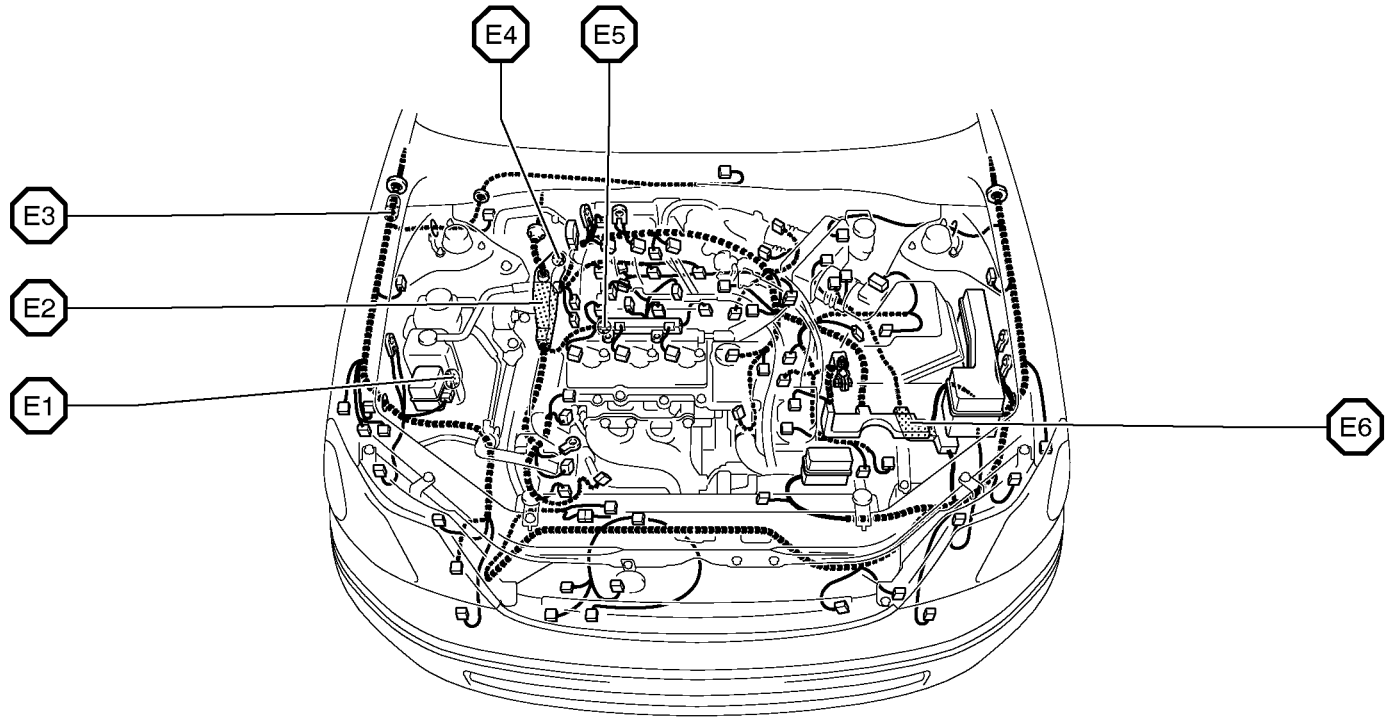

Connector Joining Wire Harness and Wire Harness

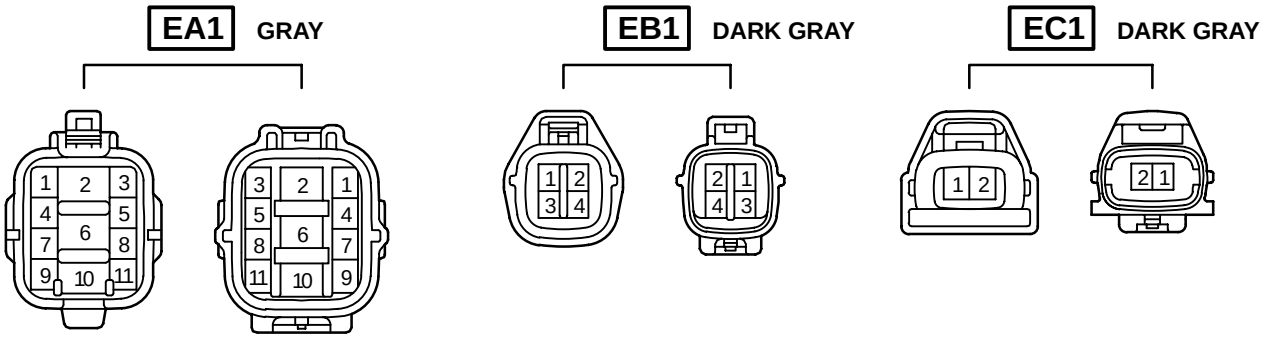

Code	Joining Wire Harness and Wire Harness (Connector Location)
EA1	Cowl Wire and Engine Room No.2 Wire (Near the Engine Room R/B No.2)
EB1	Engine Wire and Sensor Wire (LH Bank of the Cylinder Head)
EC1	Engine Room Main Wire and Engine Room No.3 Wire (Near the Radiator Fan)

▭ : Location of Connector Joining Wire Harness and Wire Harness

[Column Shift]

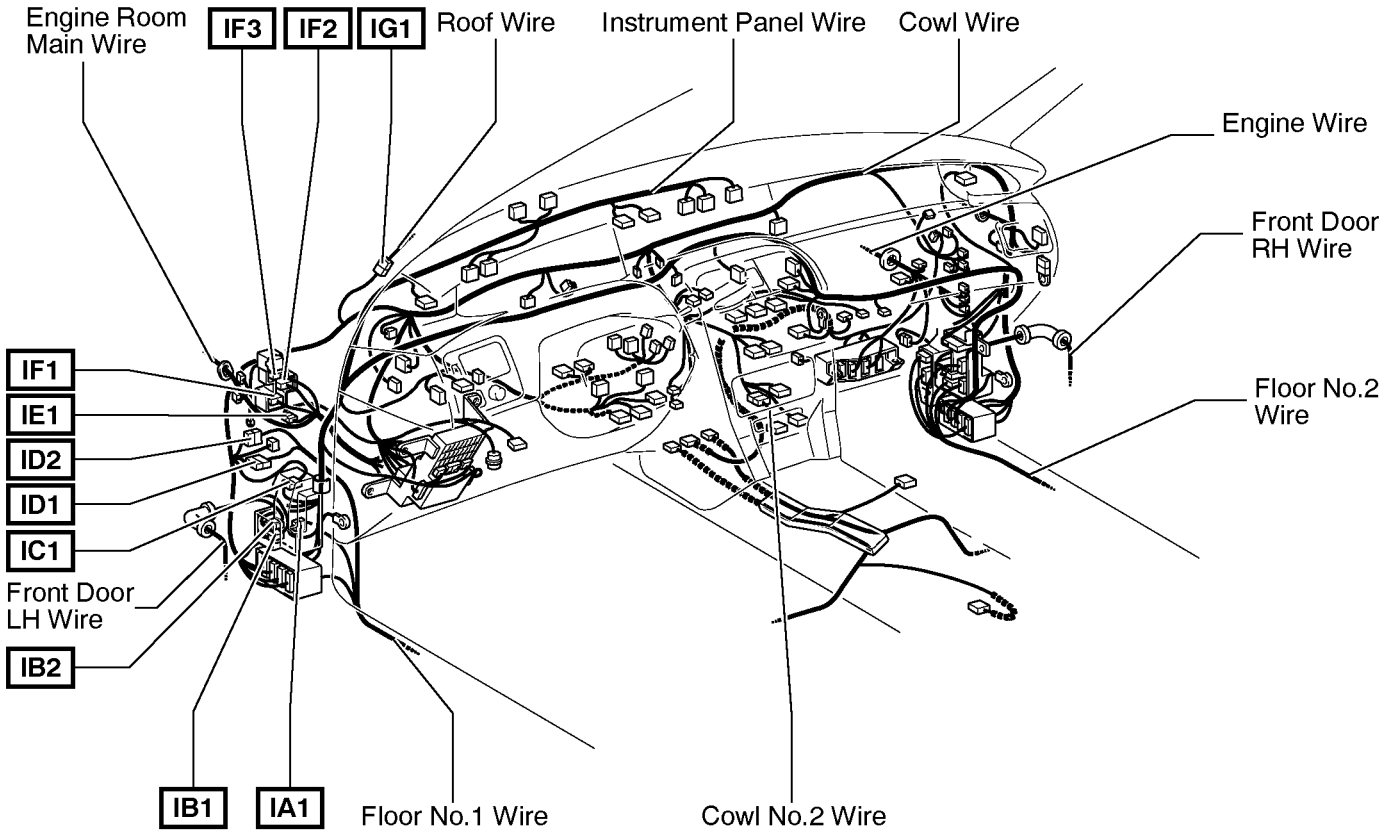

▽ : Location of Ground Points

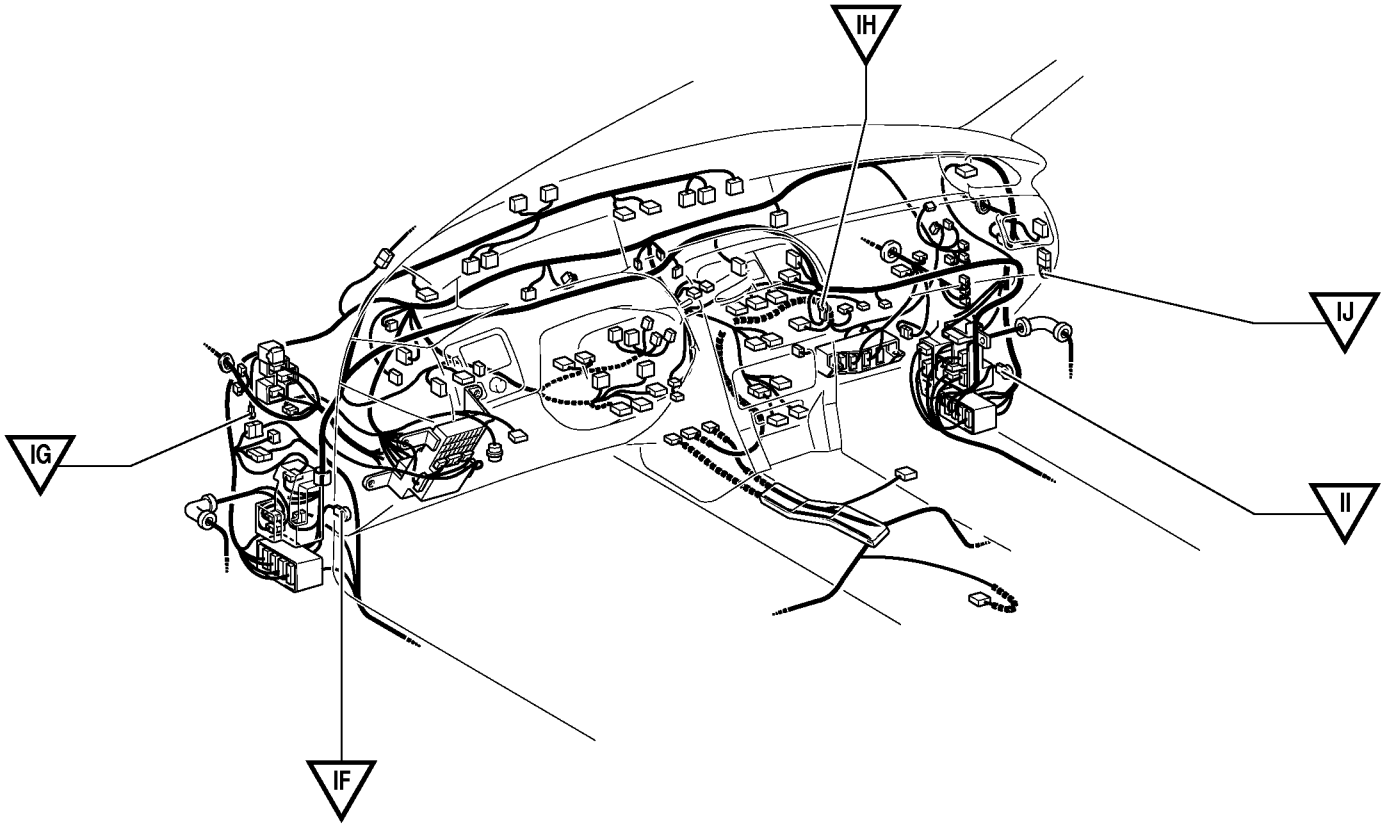

Connector Joining Wire Harness and Wire Harness

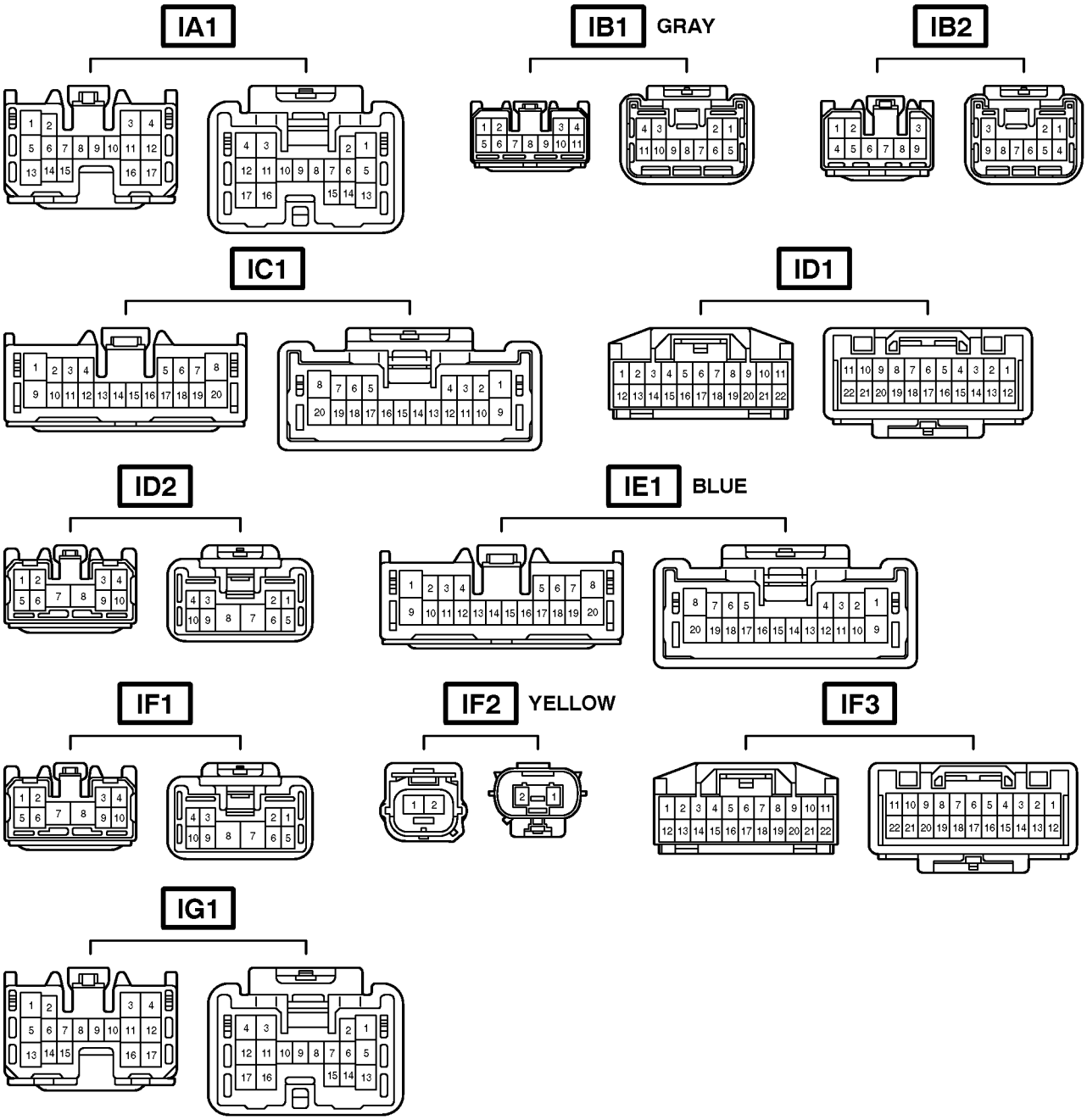

Code	Joining Wire Harness and Wire Harness (Connector Location)
IA1	Floor No.1 Wire and Instrument Panel Wire (Left Kick Panel)
IB1	Front Door LH Wire and Instrument Panel Wire (Left Kick Panel)
IB2	
IC1	Cowl Wire and Instrument Panel Wire (Left Kick Panel)
ID1	Floor No.1 Wire and Cowl Wire (Left Kick Panel)
ID2	
IE1	Engine Room Main Wire and Cowl Wire (Behind the Driver Side J/B)
IF1	Engine Room Main Wire and Cowl Wire (Left Side of Instrument Panel)
IF2	
IF3	
IG1	Roof Wire and Cowl Wire (Front Left Pillar)

▭ : Location of Connector Joining Wire Harness and Wire Harness

[Column Shift]

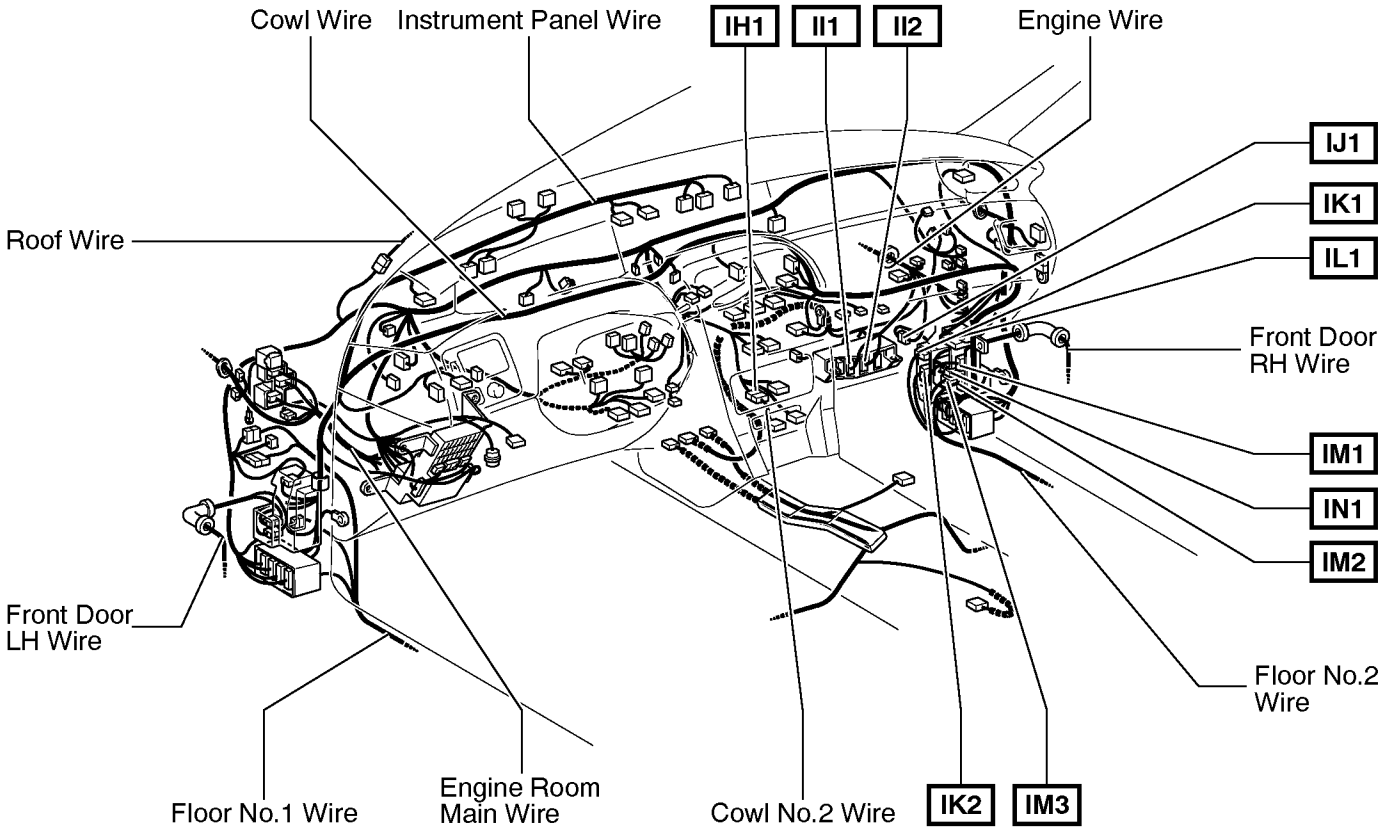

◯ : Location of Splice Points

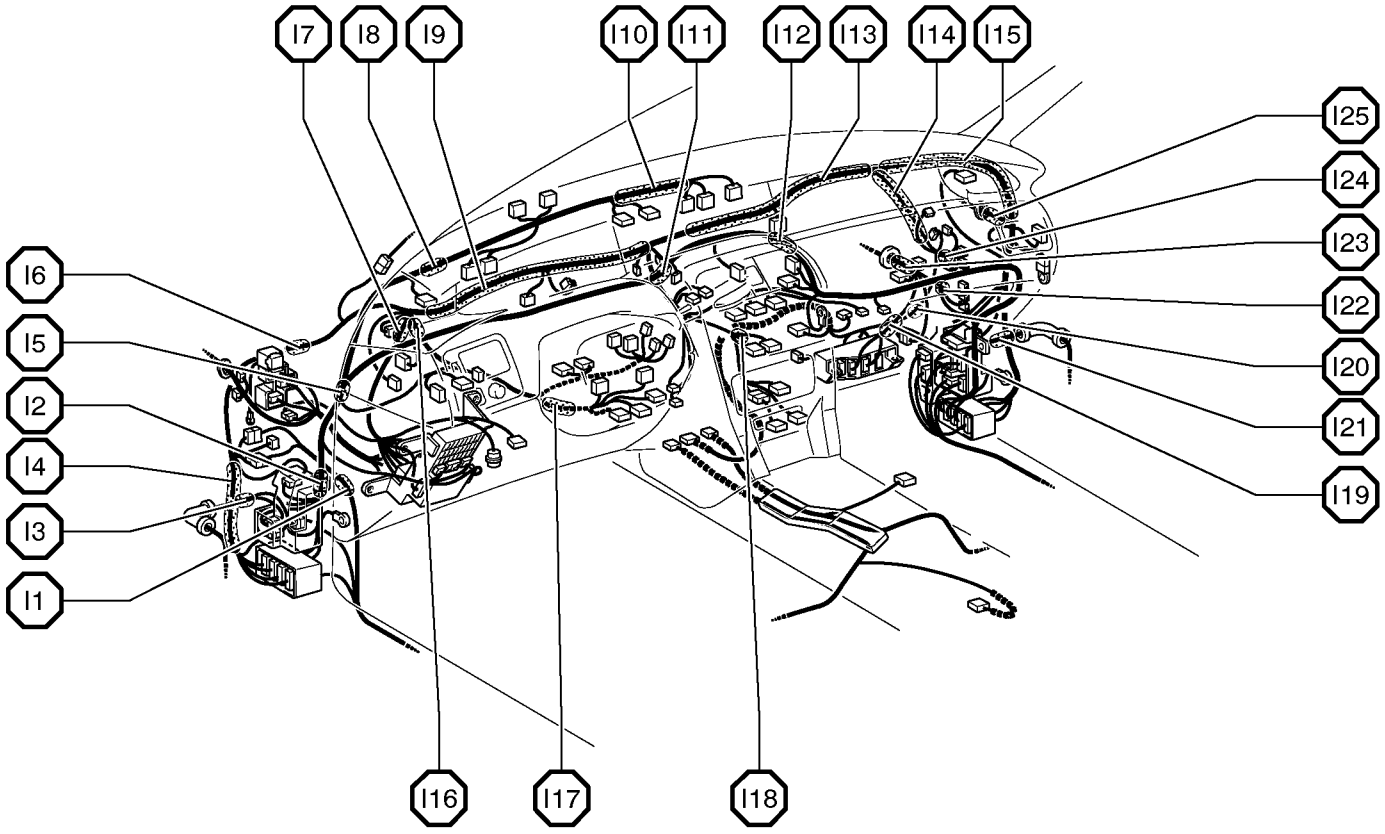

Connector Joining Wire Harness and Wire Harness

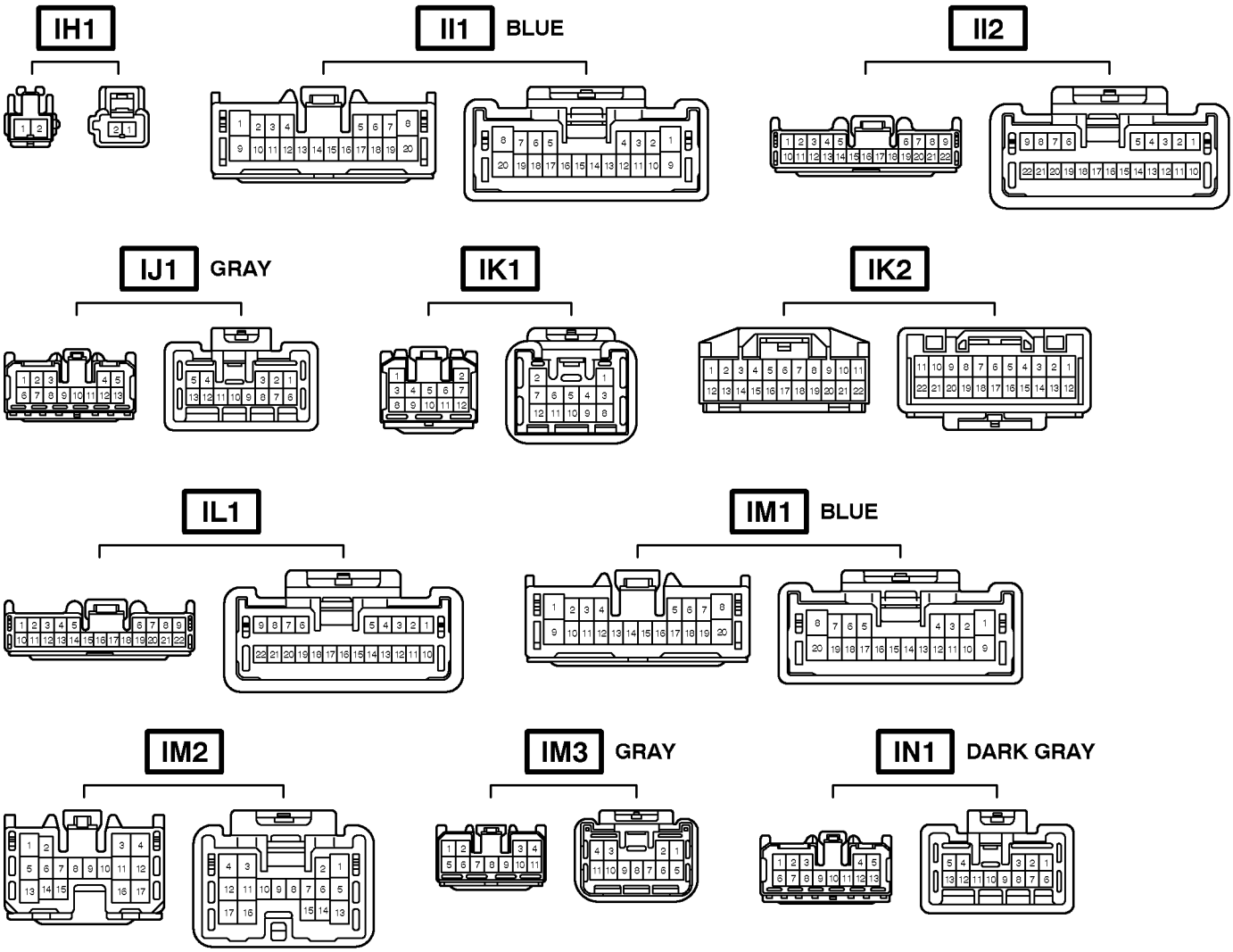

Code	Joining Wire Harness and Wire Harness (Connector Location)
IH1	Cowl Wire and Cowl No.2 Wire (Behind the Center Cluster)
II1	Engine Wire and Cowl Wire (Behind the Glove Box)
II2	
IJ1	Engine Wire and Instrument Panel Wire (Right Kick Panel)
IK1	Floor No.2 Wire and Cowl Wire (Right Kick Panel)
IK2	
IL1	Cowl Wire and Instrument Panel Wire (Right Kick Panel)
IM1	Floor No.2 Wire and Instrument Panel Wire (Right Kick Panel)
IM2	
IM3	
IN1	Front Door RH Wire and Instrument Panel Wire (Right Kick Panel)

▭ : Location of Connector Joining Wire Harness and Wire Harness

[Floor Shift]

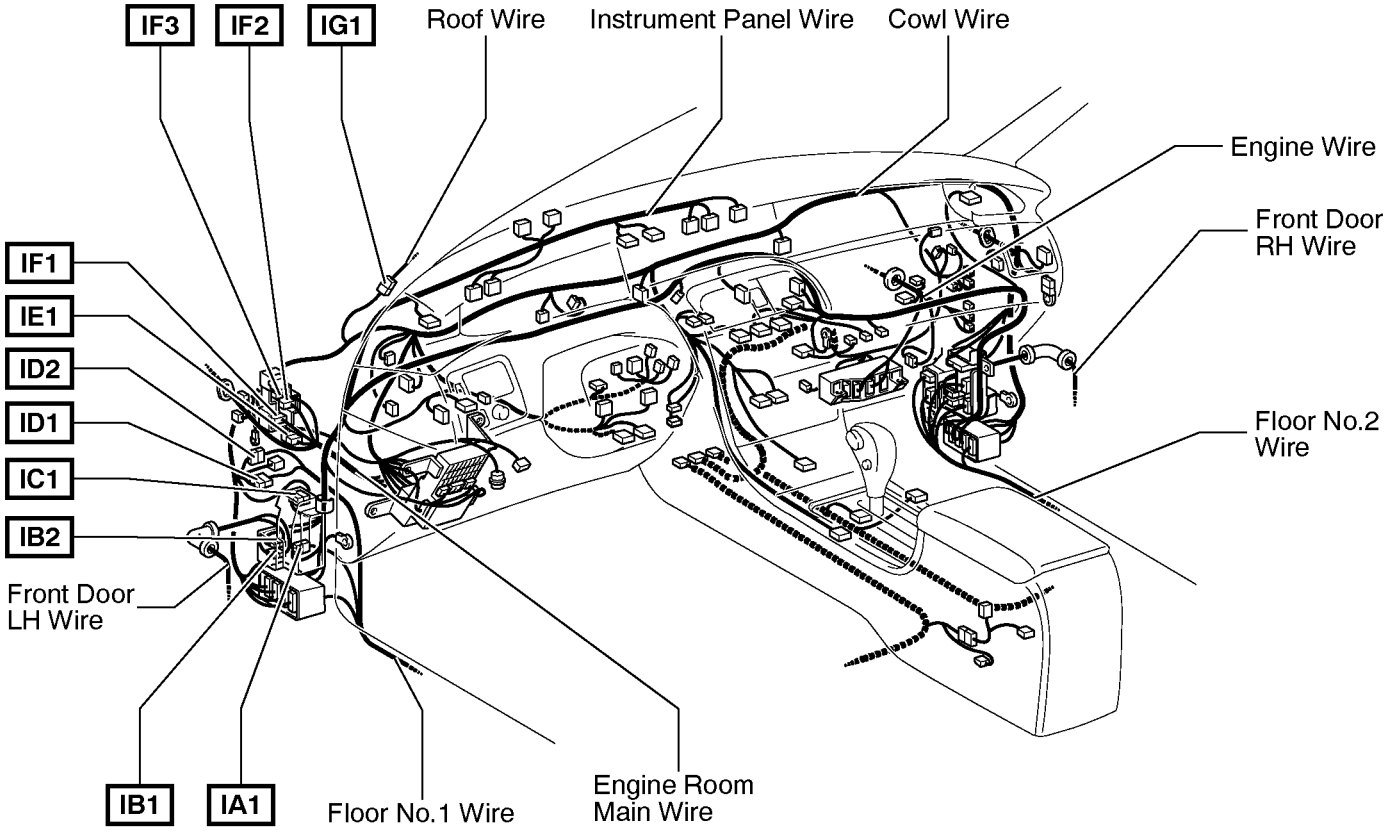

▽ : Location of Ground Points

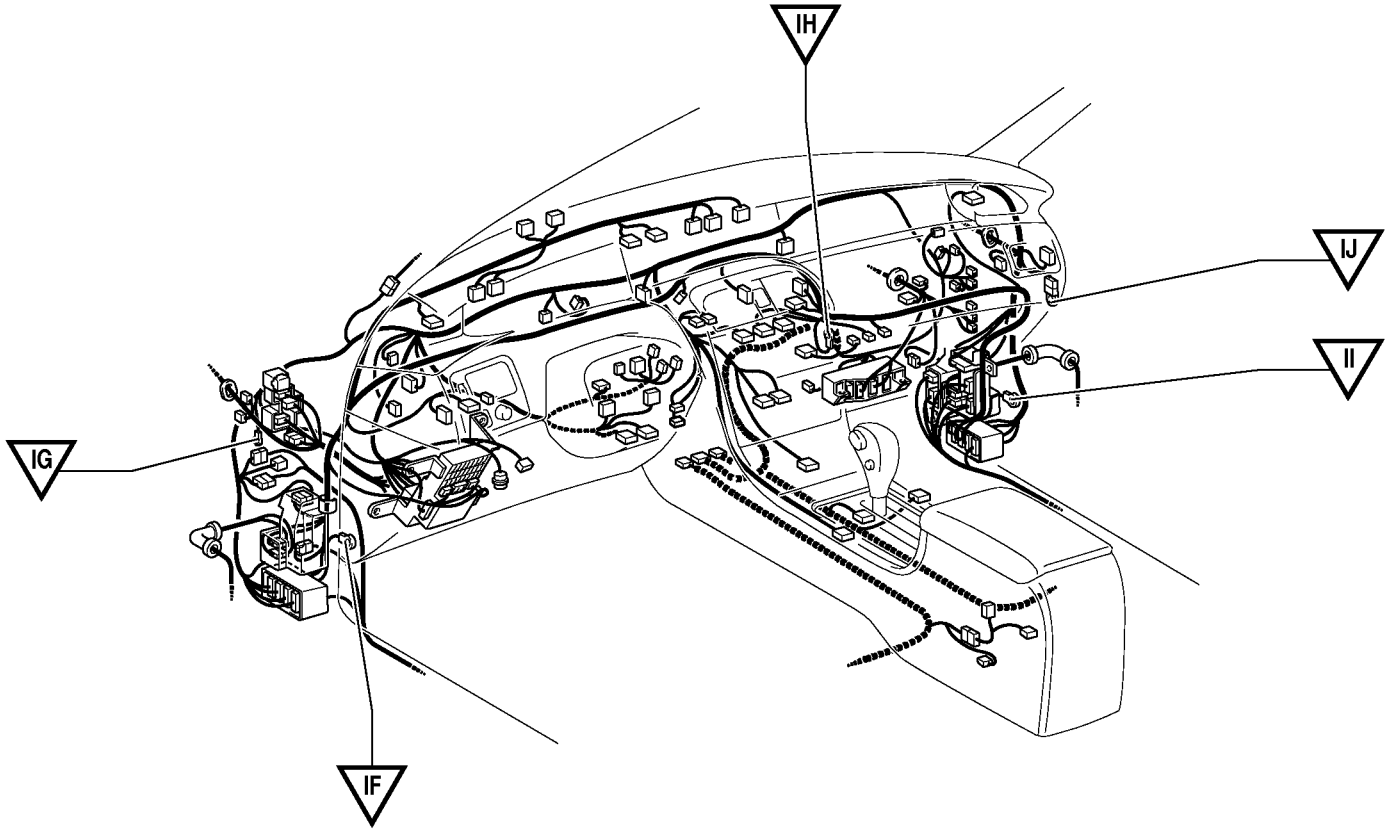

Connector Joining Wire Harness and Wire Harness

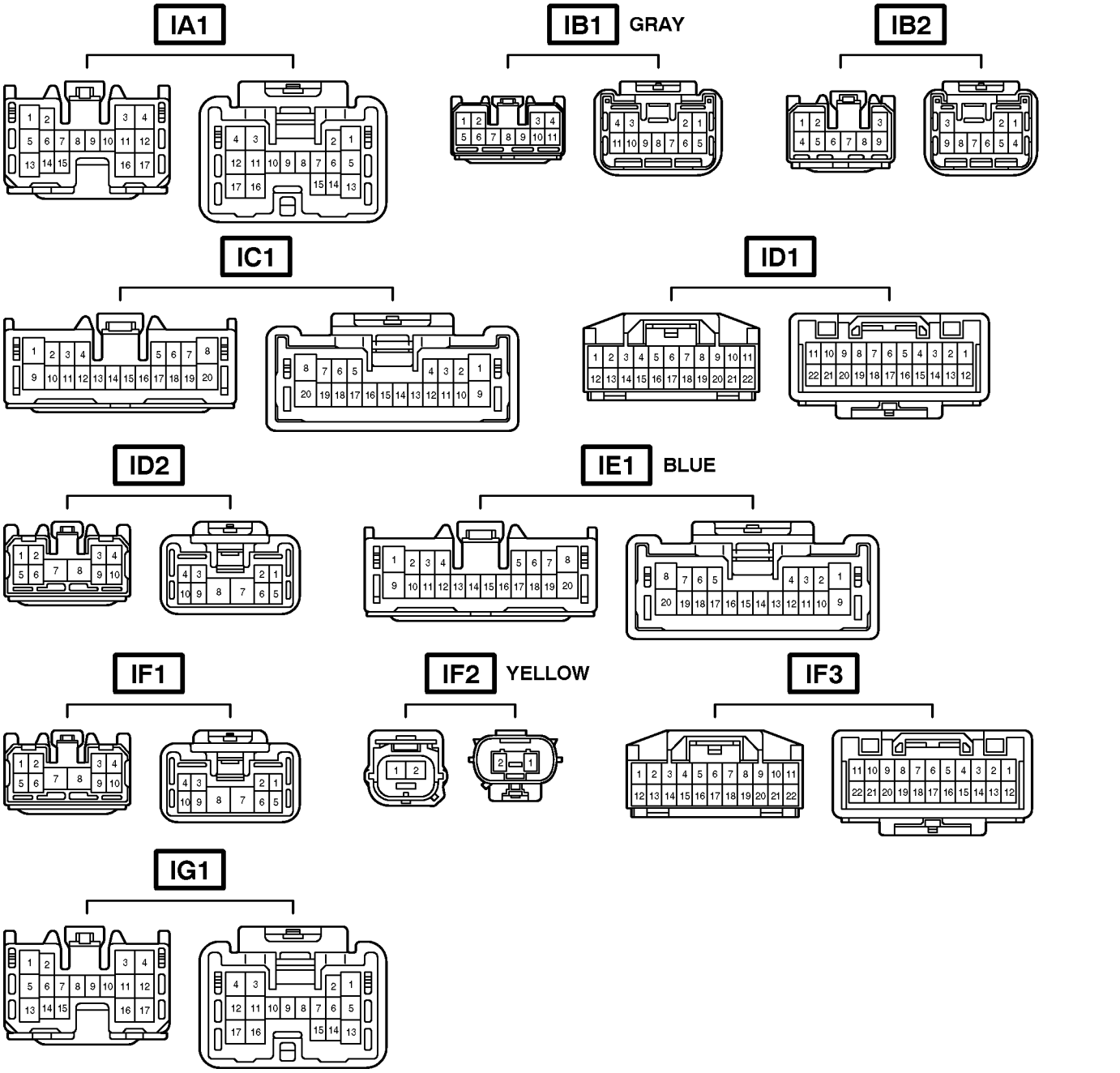

Code	Joining Wire Harness and Wire Harness (Connector Location)
IA1	Floor No.1 Wire and Instrument Panel Wire (Left Kick Panel)
IB1	Front Door LH Wire and Instrument Panel Wire (Left Kick Panel)
IB2	
IC1	Cowl Wire and Instrument Panel Wire (Left Kick Panel)
ID1	Floor No.1 Wire and Cowl Wire (Left Kick Panel)
ID2	
IE1	Engine Room Main Wire and Cowl Wire (Behind the Driver Side J/B)
IF1	Engine Room Main Wire and Cowl Wire (Left Side of Instrument Panel)
IF2	
IF3	
IG1	Roof Wire and Cowl Wire (Front Left Pillar)

▭ : Location of Connector Joining Wire Harness and Wire Harness

[Floor Shift]

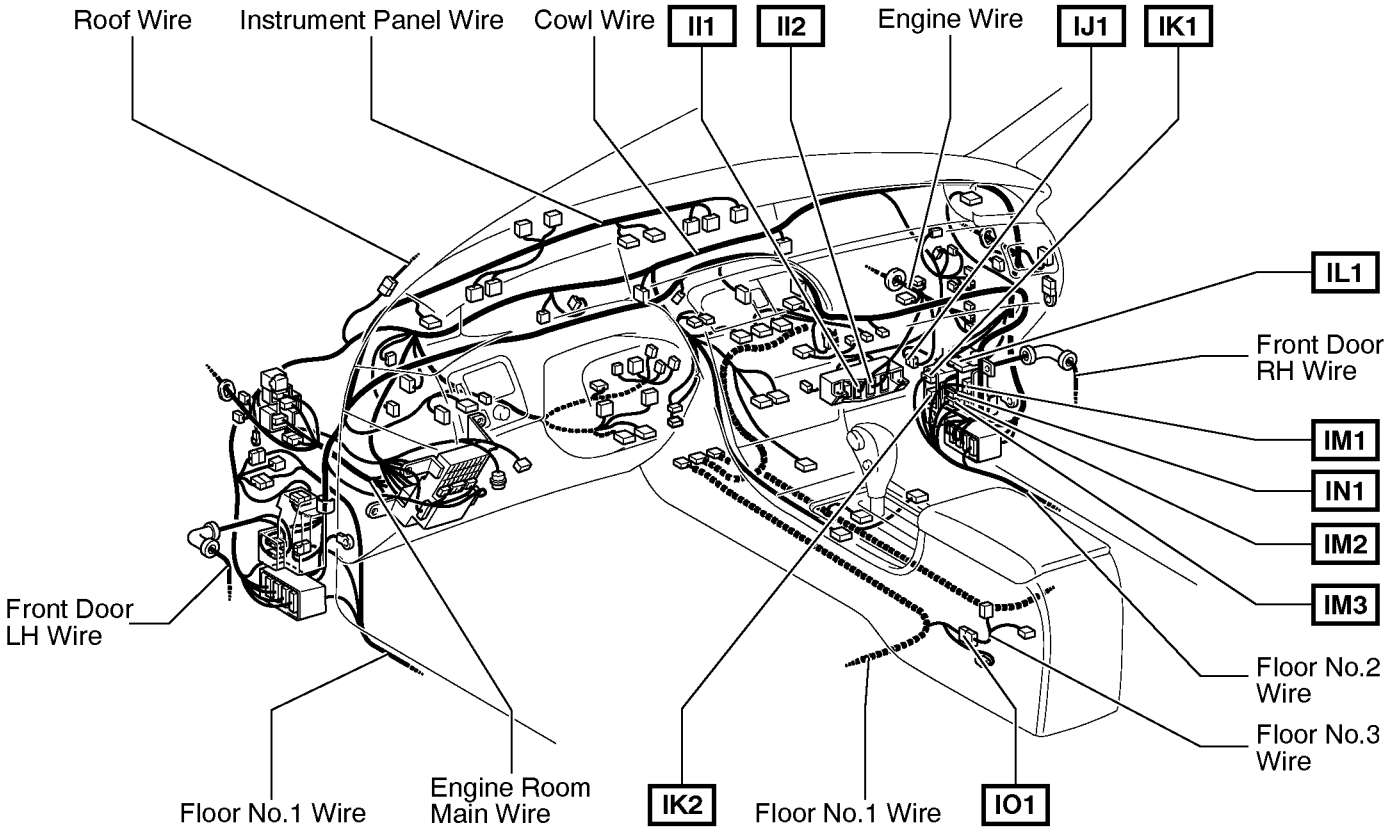

○ : Location of Splice Points

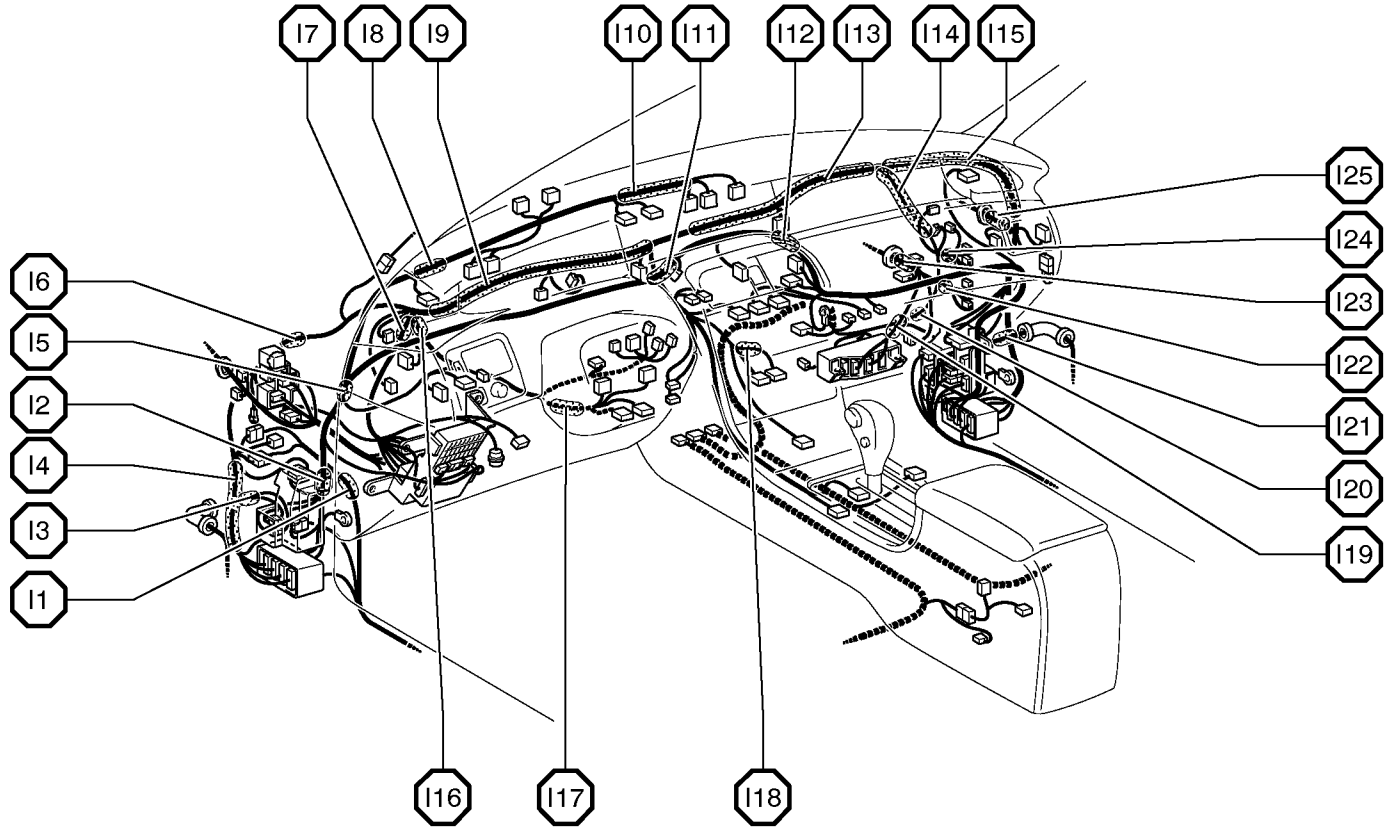

Connector Joining Wire Harness and Wire Harness

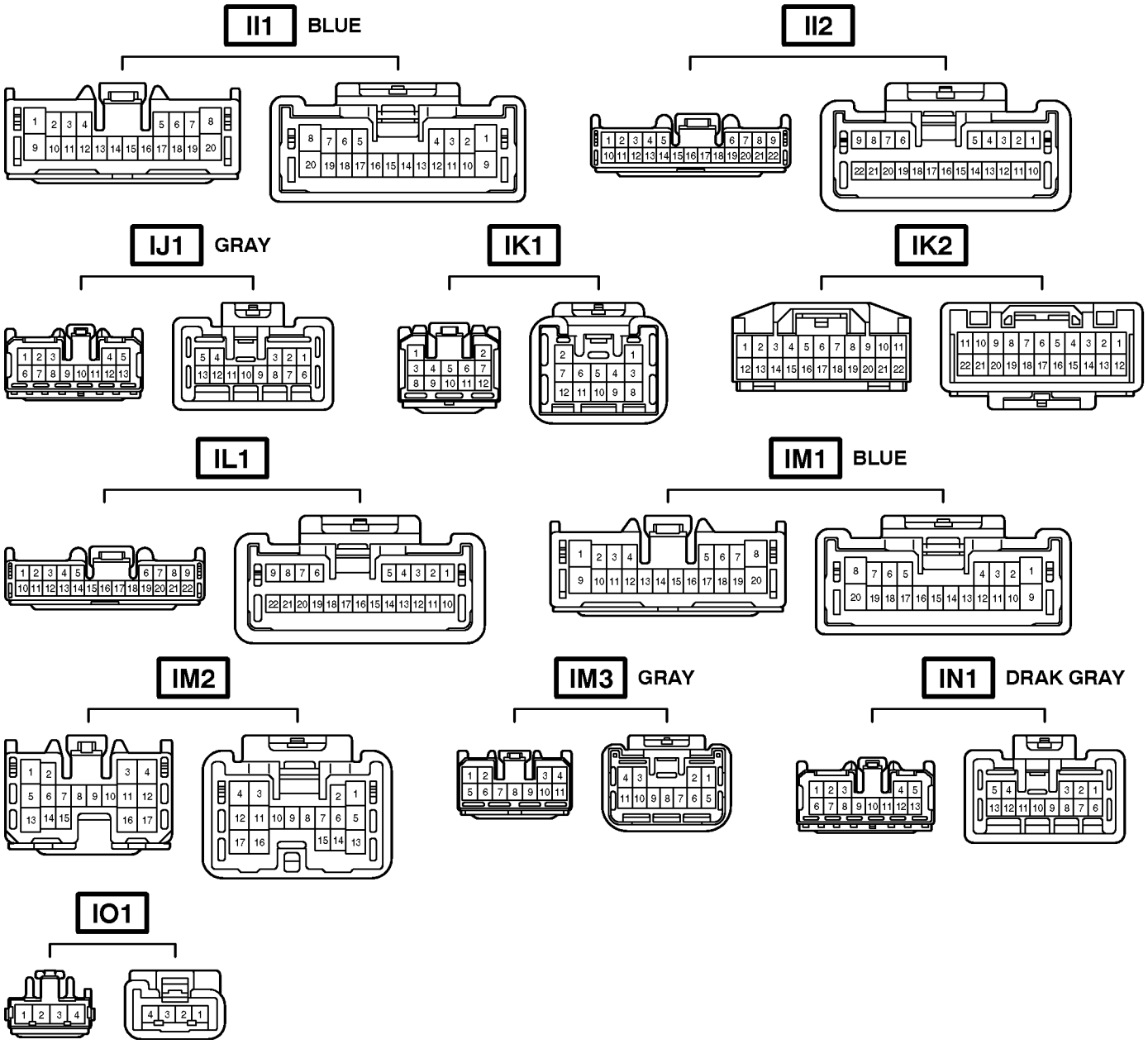

Code	Joining Wire Harness and Wire Harness (Connector Location)
II1	Engine Wire and Cowl Wire (Behind the Glove Box)
II2	
IJ1	Engine Wire and Instrument Panel Wire (Right Kick Panel)
IK1	Floor No.2 Wire and Cowl Wire (Right Kick Panel)
IK2	
IL1	Cowl Wire and Instrument Panel Wire (Right Kick Panel)
IM1	Floor No.2 Wire and Instrument Panel Wire (Right Kick Panel)
IM2	
IM3	
IN1	Front Door RH Wire and Instrument Panel Wire (Right Kick Panel)
IO1	Floor No.3 Wire and Floor No.1 Wire (Under the Console Box)

: Location of Connector Joining Wire Harness and Wire Harness
: Location of Ground Points

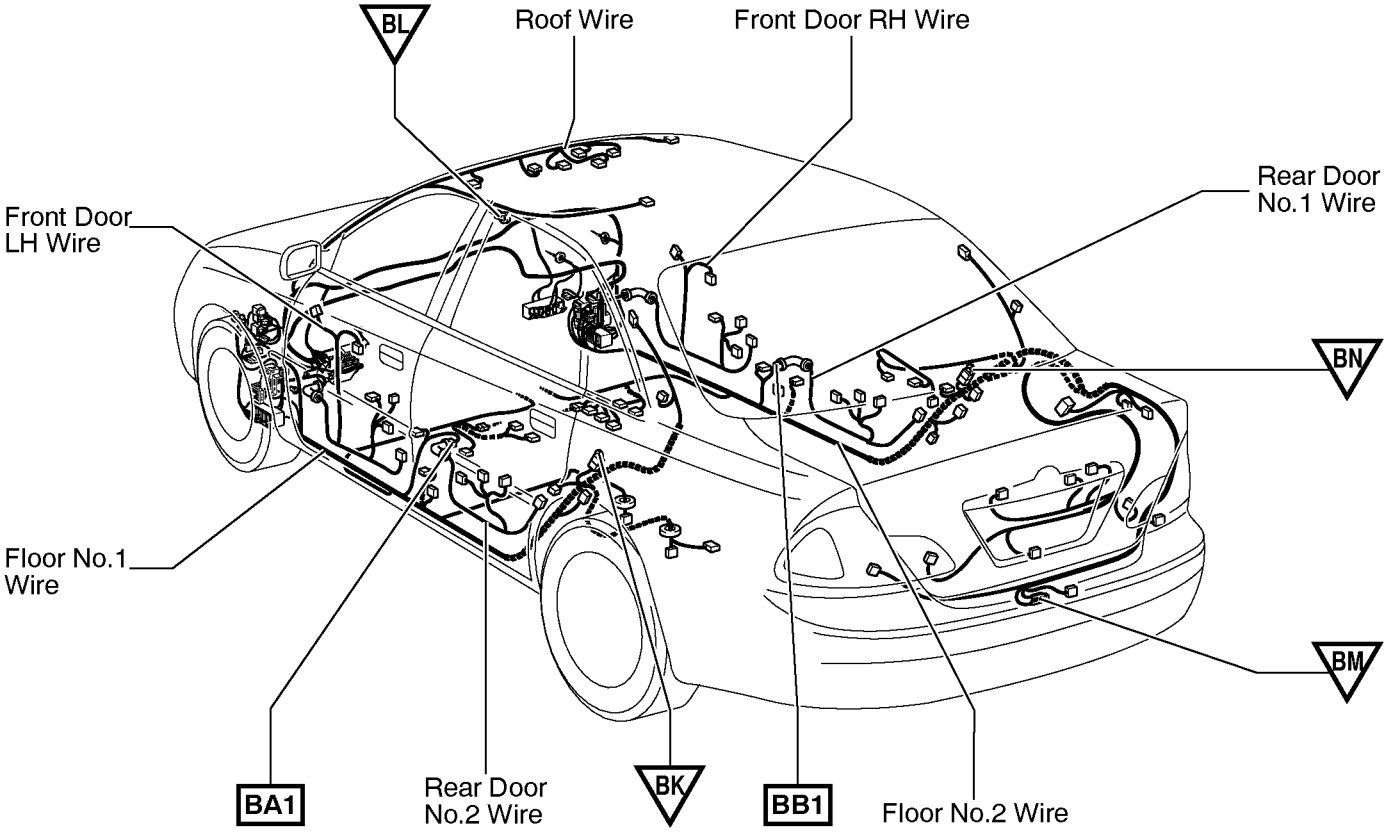

: Location of Splice Points

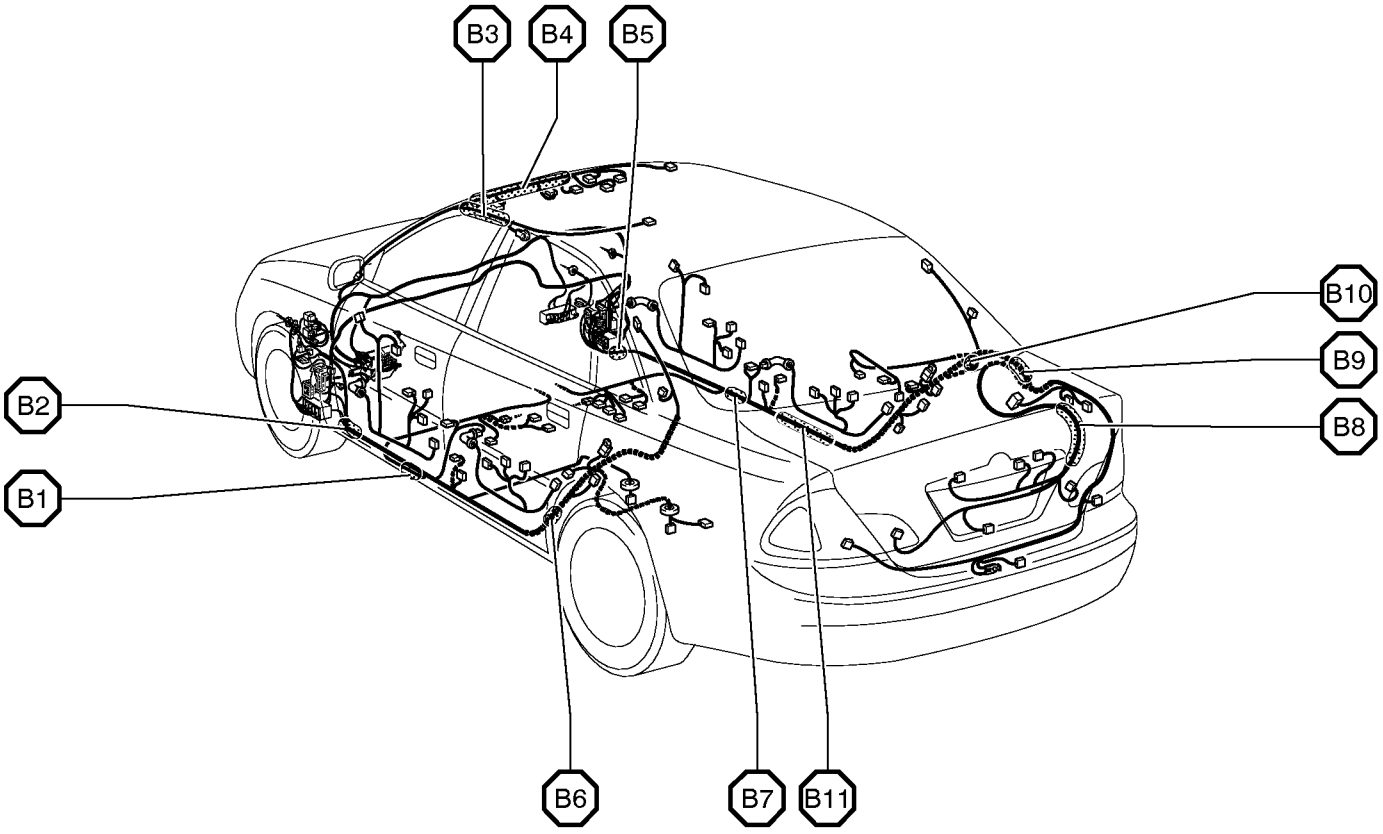

Connector Joining Wire Harness and Wire Harness

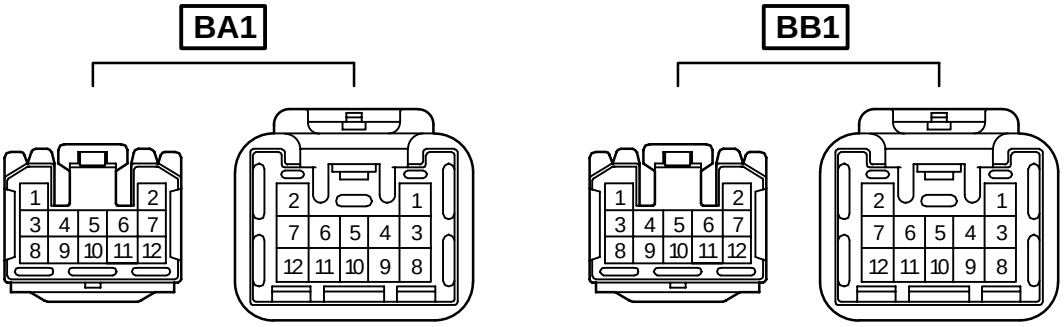

Code	Joining Wire Harness and Wire Harness (Connector Location)
BA1	Rear Door No.2 Wire and Floor No.1 Wire (Under the Left Center Pillar)
BB1	Rear Door No.1 Wire and Floor No.2 Wire (Under the Right Center Pillar)

▭ : Location of Connector Joining Wire Harness and Wire Harness

[Column Shift]

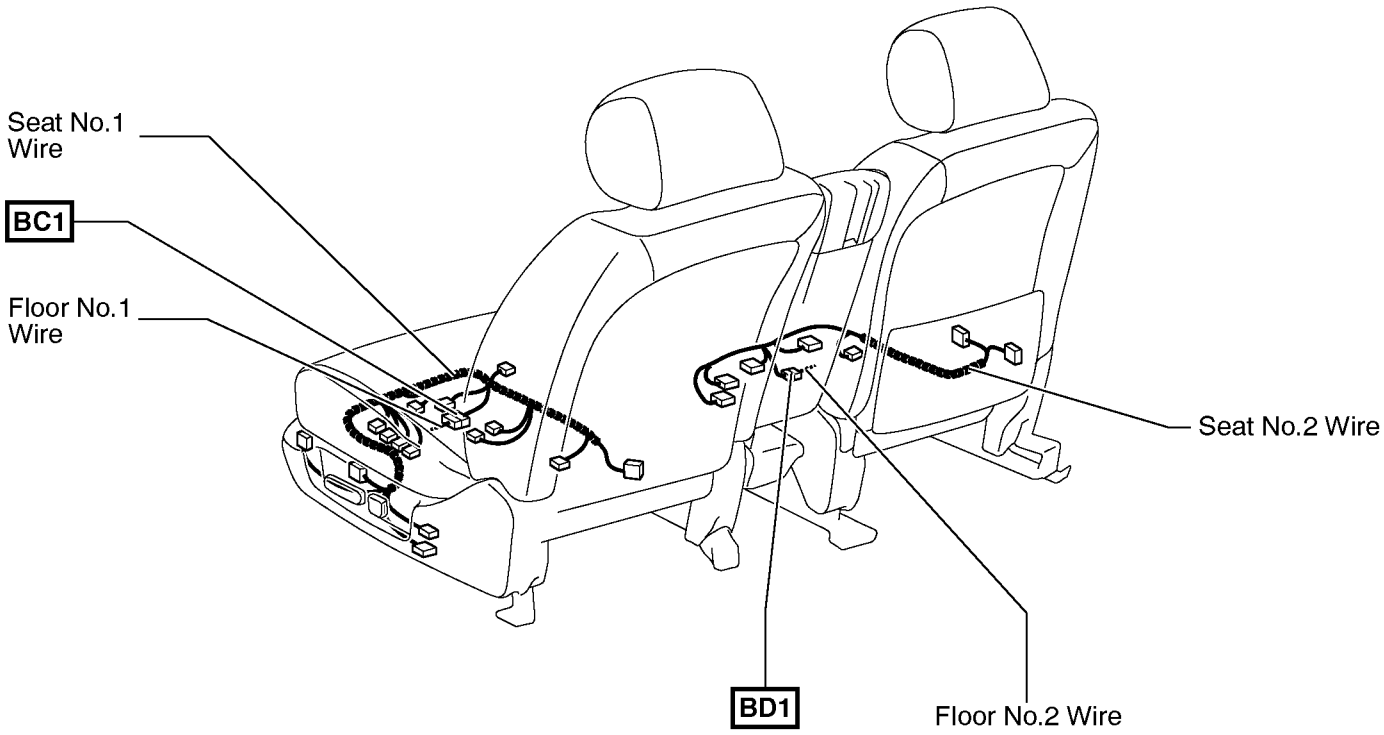

⬡ : Location of Splice Points

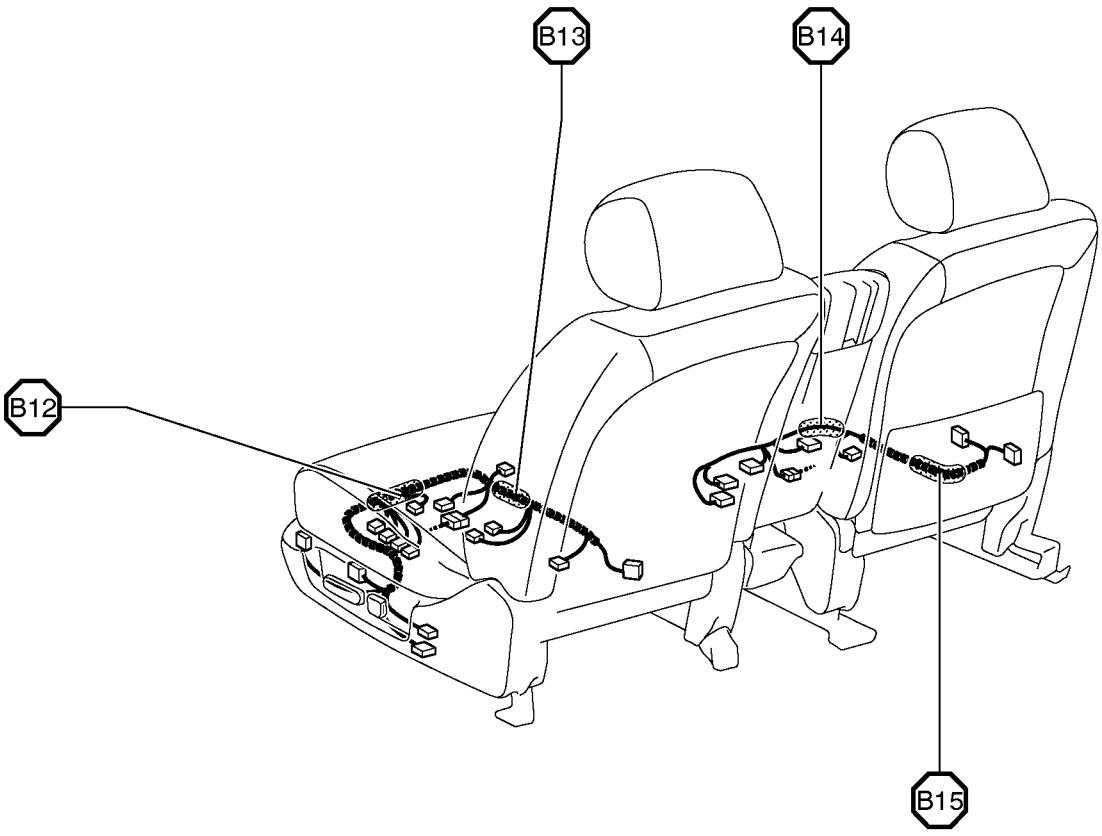

Connector Joining Wire Harness and Wire Harness

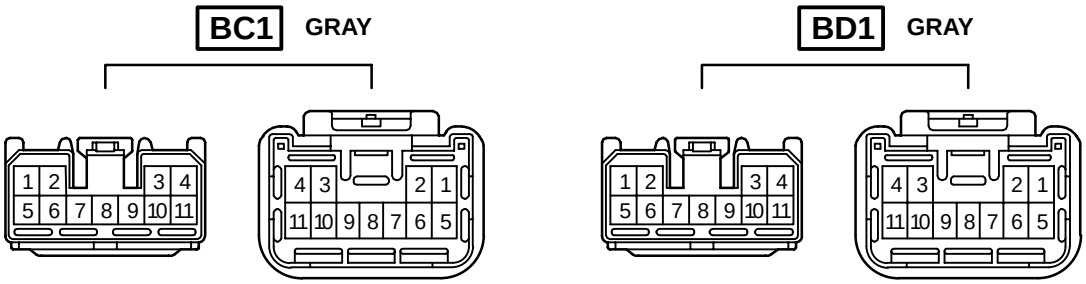

Code	Joining Wire Harness and Wire Harness (Connector Location)
BC1	Floor No.1 Wire and Seat No.1 Wire (Under the Driver's Seat)
BD1	Floor No.2 Wire and Seat No.2 Wire (Under the Front Passenger's Seat)

▭ : Location of Connector Joining Wire Harness and Wire Harness

[Floor Shift]

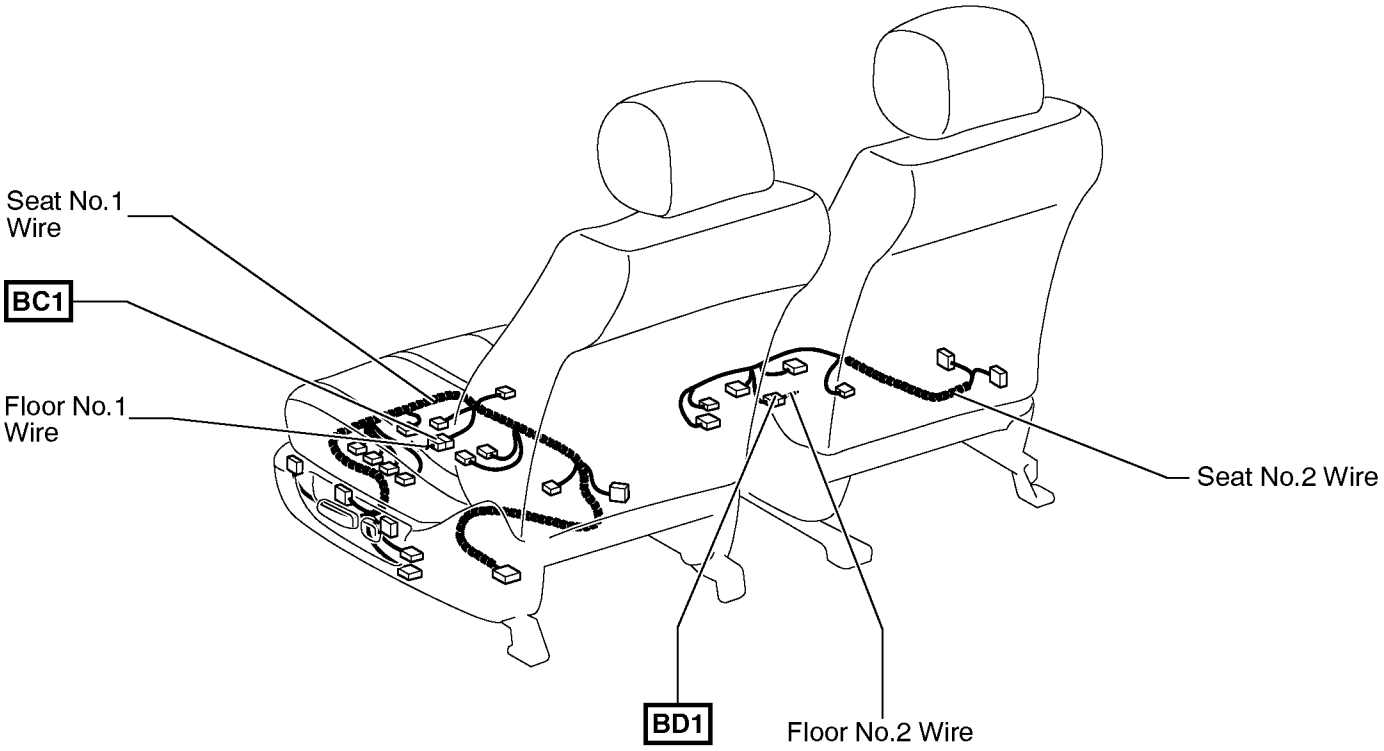

⬡ : Location of Splice Points

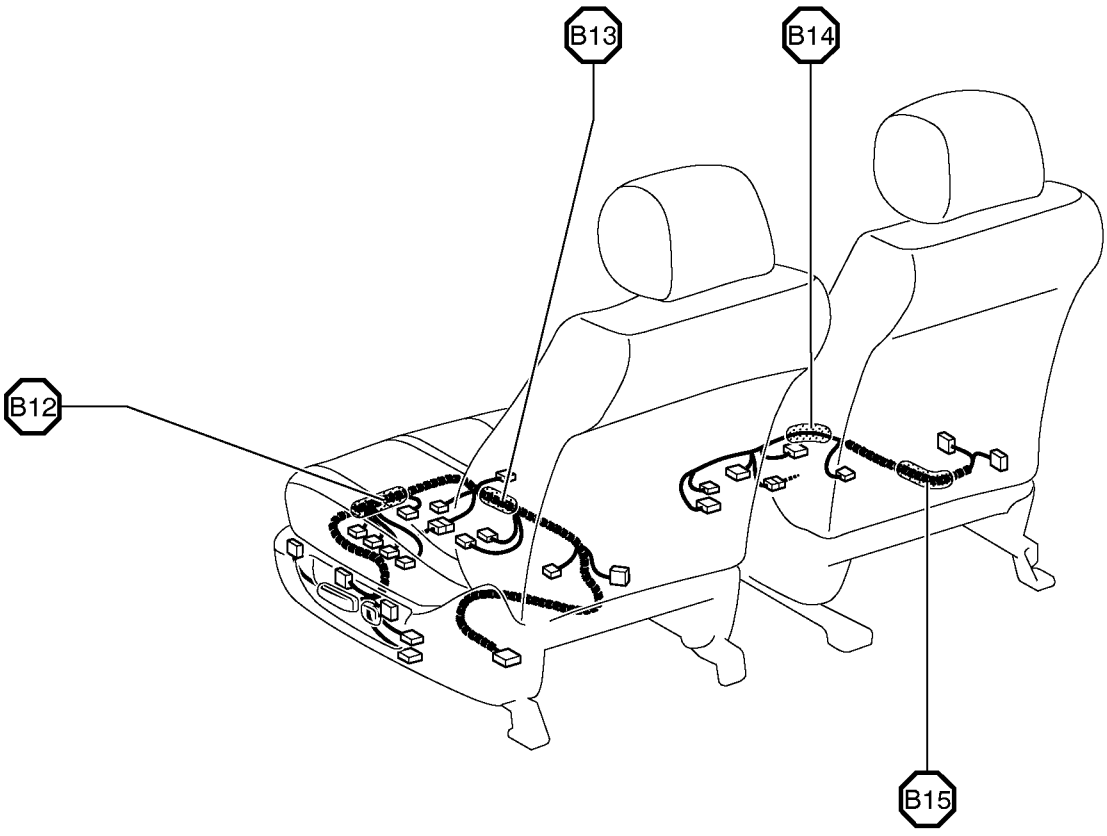

Connector Joining Wire Harness and Wire Harness

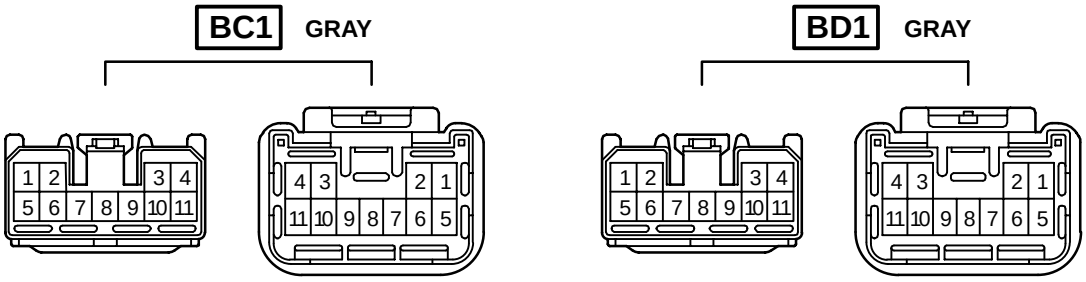

Code	Joining Wire Harness and Wire Harness (Connector Location)
BC1	Floor No.1 Wire and Seat No.1 Wire (Under the Driver's Seat)
BD1	Floor No.2 Wire and Seat No.2 Wire (Under the Front Passenger's Seat)

Position of Parts in Engine Compartment

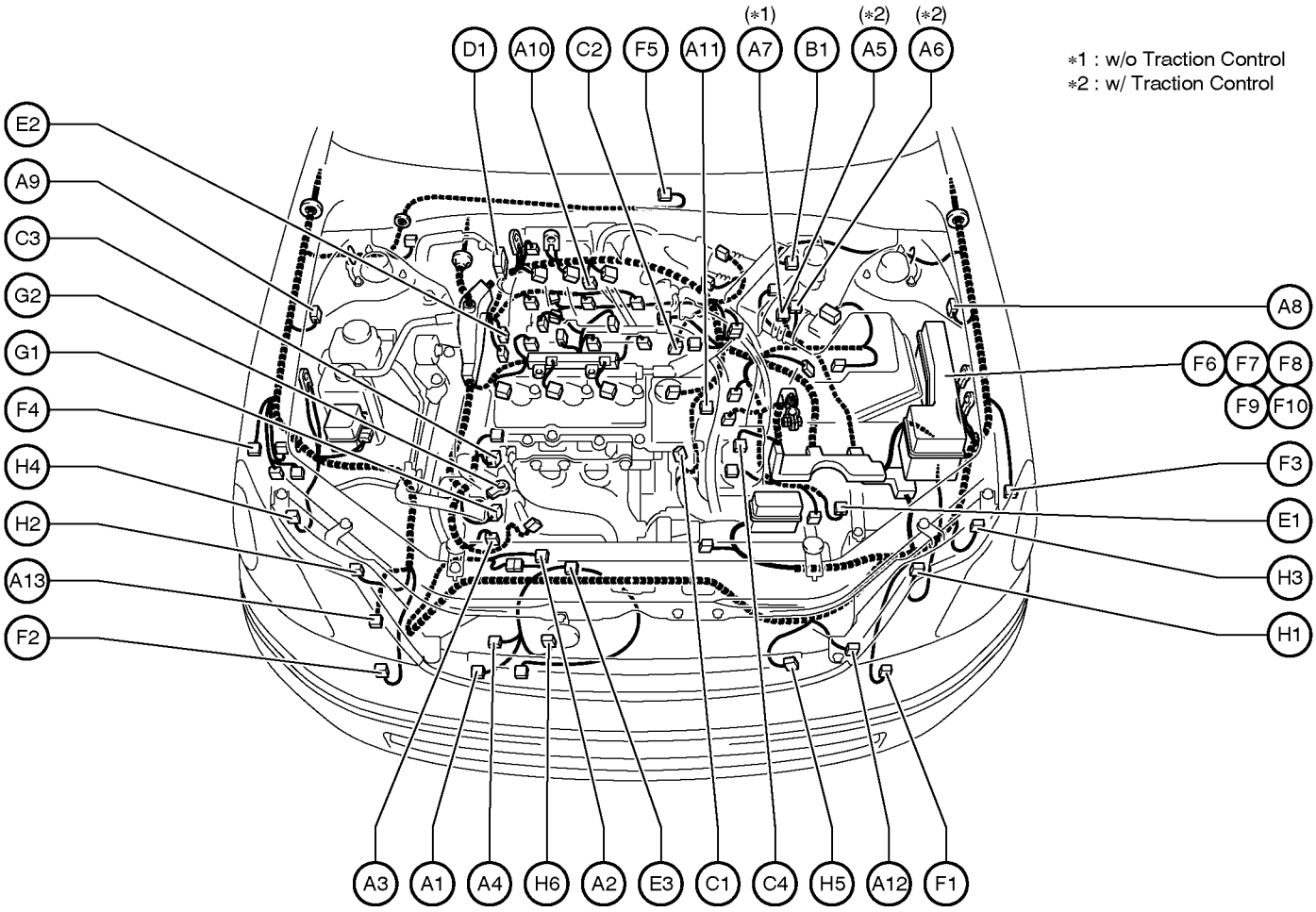

A 1 A/C Ambient Temp. Sensor
A 2 A/C Condenser Fan Motor
A 3 A/C Magnetic Clutch and Lock Sensor
A 4 A/C Triple Pressure SW
(A/C Dual and Single Pressure SW)
A 5 ABS & BA & TRAC & VSC Actuator
A 6 ABS & BA & TRAC & VSC Actuator
A 7 ABS Actuator and ECU
A 8 ABS Speed Sensor Front LH
A 9 ABS Speed Sensor Front RH
A10 Air Fuel Ratio Sensor (Bank 1 Sensor 1)
A11 Air Fuel Ratio Sensor (Bank 2 Sensor 1)
A12 Airbag Sensor Front LH
A13 Airbag Sensor Front RH

B 1 Brake Fluid Level Warning SW

C 1 Camshaft Position Sensor LH
C 2 Camshaft Position Sensor RH
C 3 Crankshaft Position Sensor
C 4 Cruise Control Actuator

D 1 Data Link Connector 1

E 1 Electronically Controlled Transmission Solenoid
E 2 Engine Coolant Temp. Sensor
E 3 Engine Hood Courtesy SW

F 1 Front Fog Light LH
F 2 Front Fog Light RH
F 3 Front Turn Signal Light and Parking Light LH
F 4 Front Turn Signal Light and Parking Light RH
F 5 Front Wiper Motor
F 6 Fusible Link Block
F 7 Fusible Link Block
F 8 Fusible Link Block
F 9 Fusible Link Block
F10 Fusible Link Block

G 1 Generator
G 2 Generator

H 1 Headlight High LH
H 2 Headlight High RH
H 3 Headlight Low LH
H 4 Headlight Low RH
H 5 Horn LH
H 6 Horn RH

Position of Parts in Engine Compartment

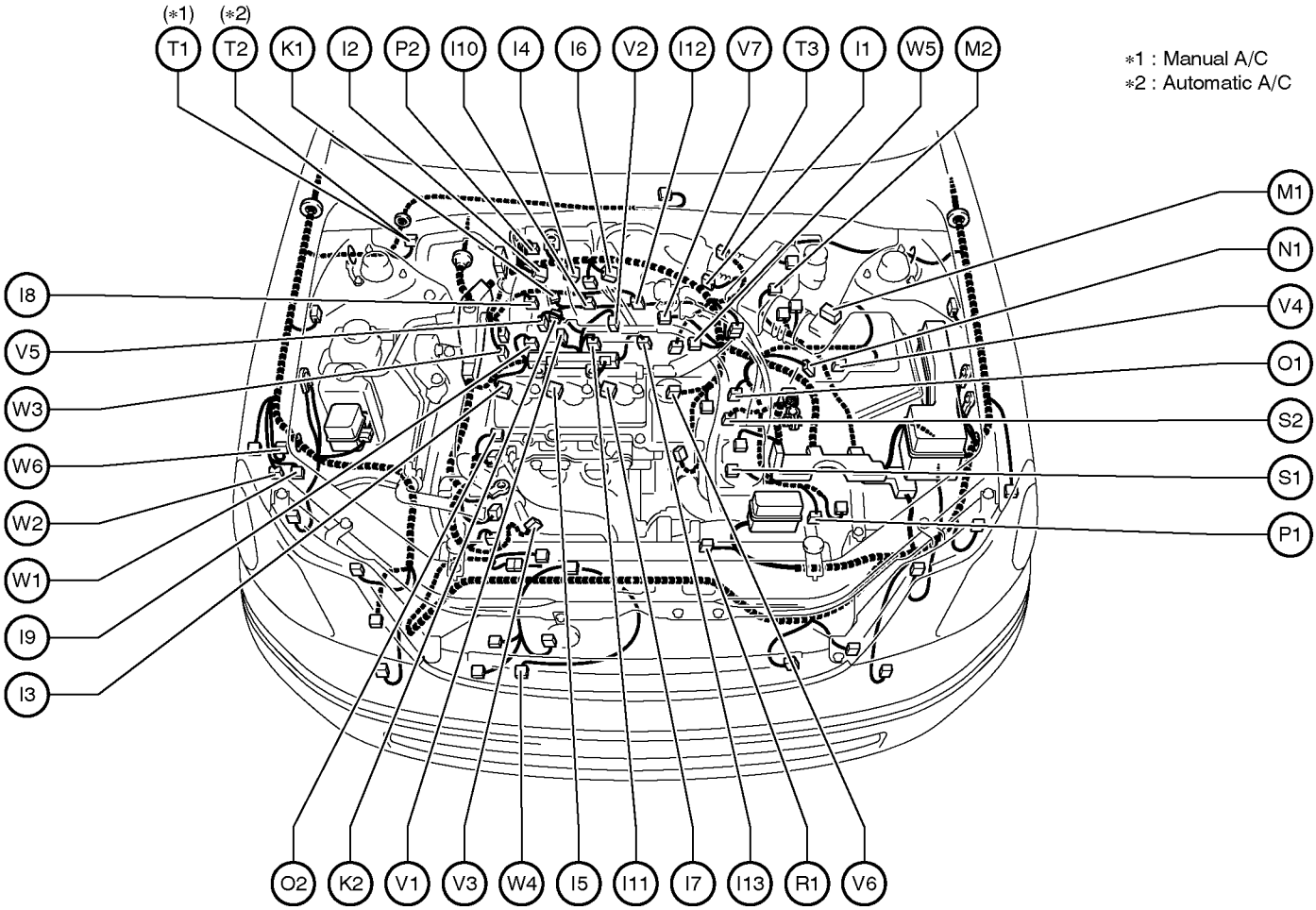

I 1 Idle Air Control Valve
I 2 Ignition Coil and Igniter No.1
I 3 Ignition Coil and Igniter No.2
I 4 Ignition Coil and Igniter No.3
I 5 Ignition Coil and Igniter No.4
I 6 Ignition Coil and Igniter No.5
I 7 Ignition Coil and Igniter No.6
I 8 Injector No.1
I 9 Injector No.2
I 10 Injector No.3
I 11 Injector No.4
I 12 Injector No.5
I 13 Injector No.6

K 1 Knock Sensor 1
K 2 Knock Sensor 2

M 1 Mass Air Flow Meter
M 2 Masster Cylinder Pressure Sensor

N 1 Noise Filter (Ignition)

O 1 O/D Direct Clutch Speed Sensor
O 2 Oil Pressure SW

P 1 Park/Neutral Position SW, A/T Indicator Light SW and Back-Up Light SW
P 2 Power Steering Oil Pressure SW

R 1 Radiator Fan Motor

S 1 Starter
S 2 Starter

T 1 Theft Deterrent Buzzer
T 2 Theft Deterrent Horn
T 3 Throttle Position Sensor

V 1 VSV (ACIS No.1)
V 2 VSV (ACIS No.2)
V 3 VSV (ACM)
V 4 VSV (Canister Closed Valve)
V 5 VSV (EVAP)
V 6 VVT Solenoid LH
V 7 VVT Solenoid RH

W 1 Washer Level Warning SW
W 2 Washer Motor
W 3 Water Temp. Sender
W 4 Water Temp. SW No.1
W 5 Water Temp. SW No.2
W 6 Wireless Door Lock Buzzer

Position of Parts in Instrument Panel

[Column Shift]

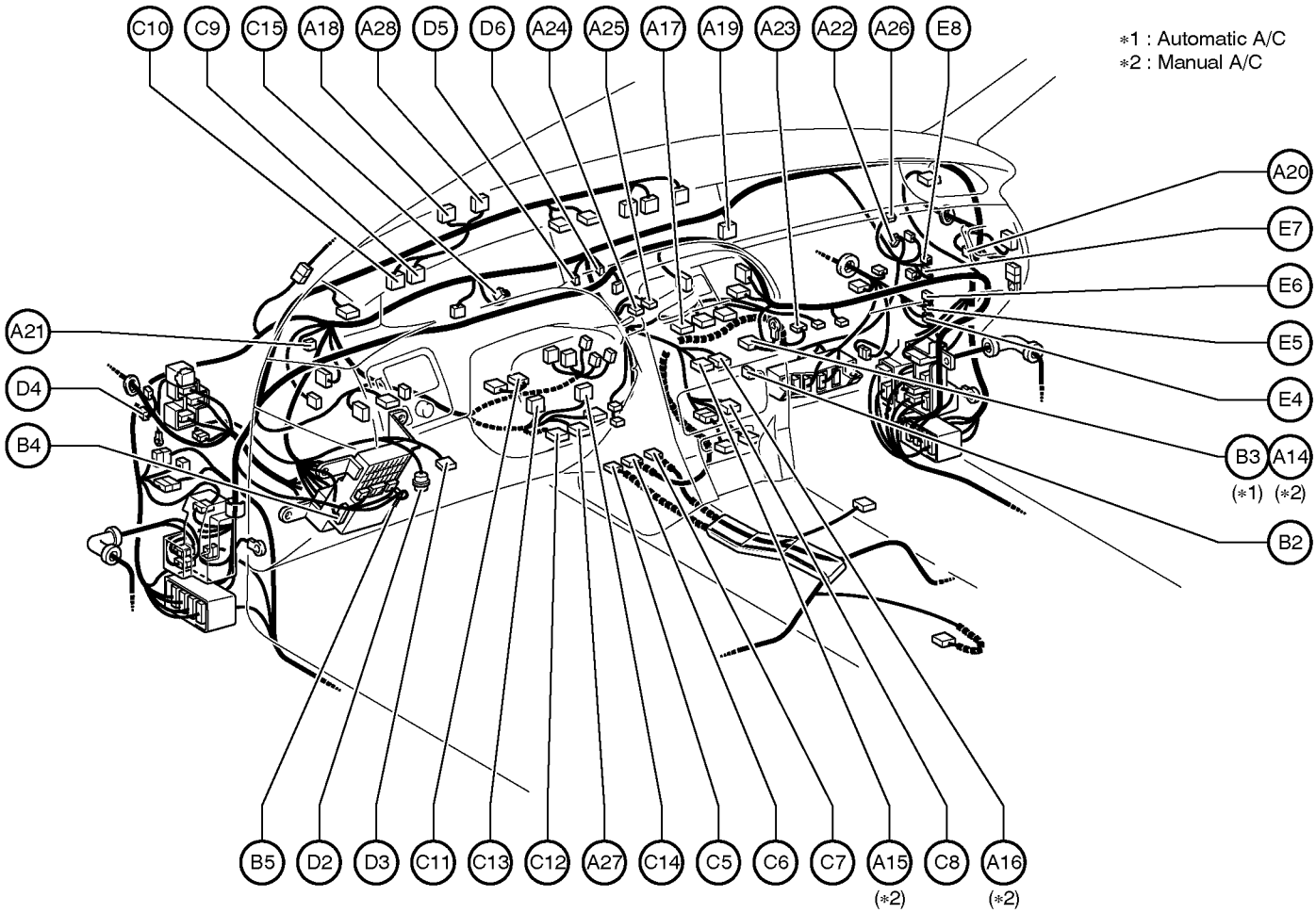

A14 A/C Blower Motor Linear Controller
A15 A/C Control Assembly
A16 A/C Control Assembly
A17 A/C Room Temp. Sensor
A18 A/C Solar Sensor
A19 A/C Thermistor
A20 ABS & BA & TRAC & VSC ECU
A21 Active Light Relay
A22 Air Inlet Control Servo Motor
A23 Air Mix Control Servo Motor (Driver Side)
A24 Air Mix Control Servo Motor (Front Passenger Side)
A25 Air Outlet Control Servo Motor
A26 Airbag Squib (Front Passenger Airbag Assembly)
A27 Airbag Squib (Steering Wheel Pad)
A28 Automatic Light Control Sensor

B 2 Blower Motor
B 3 Blower Resistor
B 4 Body ECU
B 5 Body ECU

C 5 Center Airbag Sensor Assembly
C 6 Center Airbag Sensor Assembly
C 7 Center Airbag Sensor Assembly
C 8 Cigarette Lighter
C 9 Combination Meter
C10 Combination Meter
C11 Combination SW
C12 Combination SW
C13 Combination SW
C14 Combination SW
C15 Cruise Control ECU

D 2 Data Link Connector 2
D 3 Data Link Connector 3
D 4 Diode (A/C)
D 5 Diode (A/T Indicator Light 1)
D 6 Diode (A/T Indicator Light 2)

E 4 Engine Control Module
E 5 Engine Control Module
E 6 Engine Control Module
E 7 Engine Control Module
E 8 Engine Control Module

Position of Parts in Instrument Panel

[Column Shift]

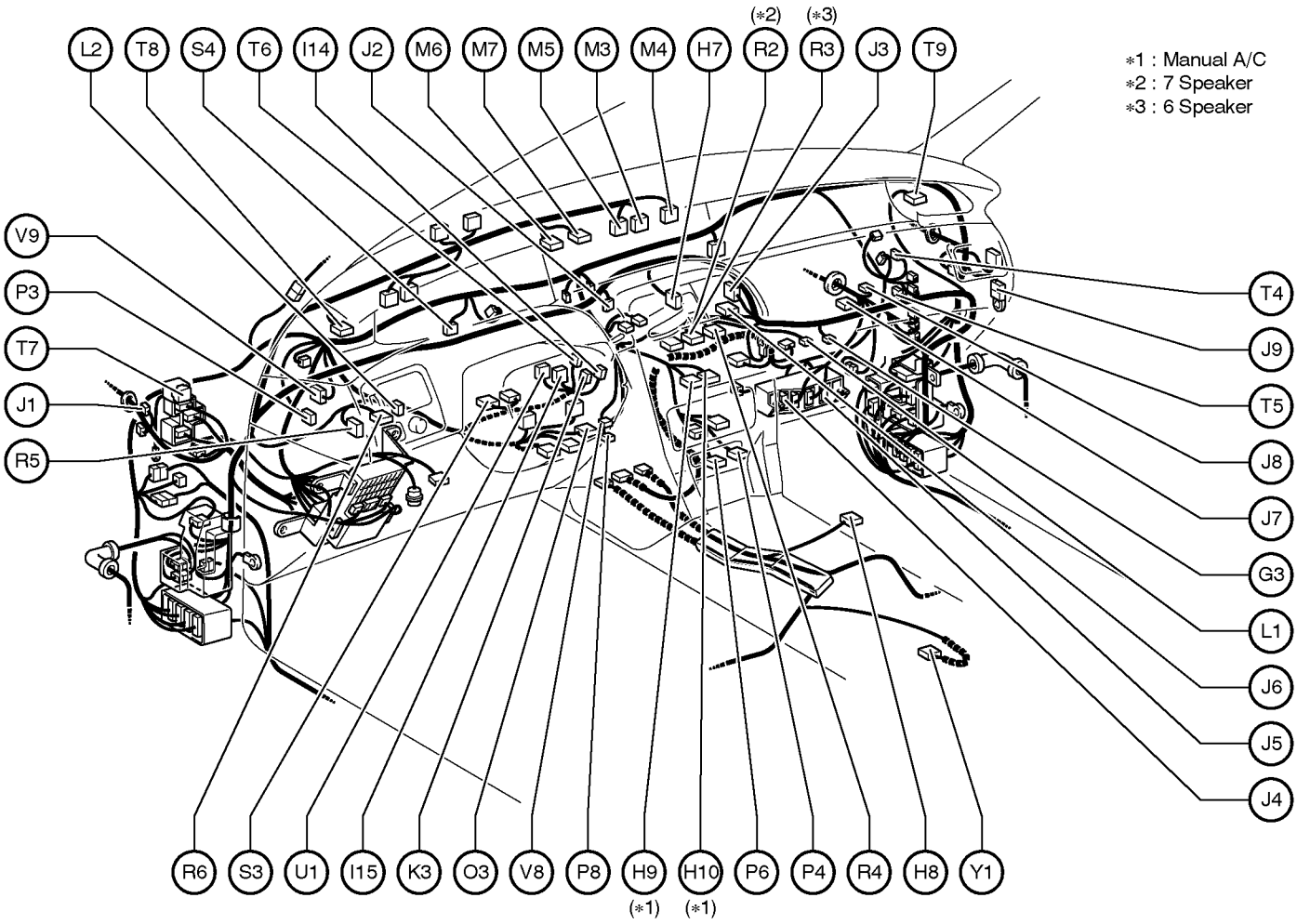

G 3 Glove Box Light SW

H 7 Hazard SW
H 8 Heated Oxygen Sensor (Bank 1 Sensor 2)
H 9 Heater Control SW
H10 Heater Control SW

I 14 Ignition Key Cylinder Light
I 15 Ignition SW

J 1 Junction Connector
J 2 Junction Connector
J 3 Junction Connector
J 4 Junction Connector
J 5 Junction Connector
J 6 Junction Connector
J 7 Junction Connector
J 8 Junction Connector
J 9 Junction Connector

K 3 Key Interlock Solenoid

L 1 Luggage Compartment Door Opener Main SW
L 2 Luggage Compartment Door Opener SW

M 3 Multi Display
M 4 Multi Display
M 5 Multi Display
M 6 Multi Display
M 7 Multi Display

O 3 O/D Main SW

P 3 Parking Brake SW
P 4 Power Outlet
P 6 Power Outlet
P 8 Power Outlet Main SW

R 2 Radio and Player
R 3 Radio and Player
R 4 Radio and Player
R 5 Remote Control Mirror SW
R 6 Rheostat

S 3 Shift Lock ECU
S 4 Stop Light SW

T 4 Theft Deterrent ECU
T 5 Translate ECU
T 6 Transponder Key Amplifier
T 7 Turn Signal Flasher Relay
T 8 Tweeter LH
T 9 Tweeter RH

U 1 Unlock Warning SW

V 8 VSC Off SW
V 9 VSC Warning Buzzer

Y 1 Yaw Rate Sensor

Position of Parts in Instrument Panel

[Floor Shift]

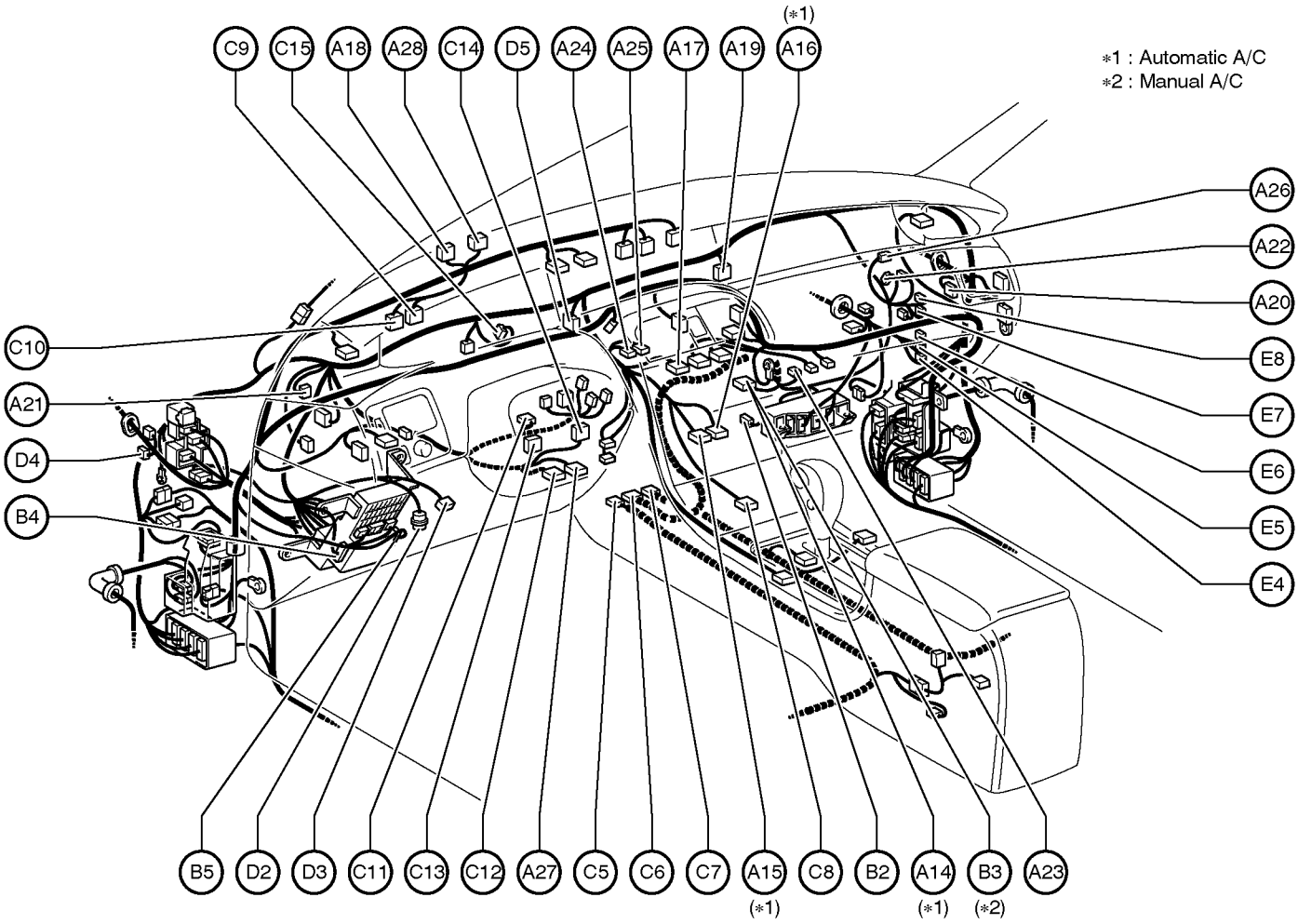

A14 A/C Blower Motor Linear Controller
A15 A/C Control Assembly
A16 A/C Control Assembly
A17 A/C Room Temp. Sensor
A18 A/C Solar Sensor
A19 A/C Thermistor
A20 ABS & BA & TRAC & VSC ECU
A21 Active Light Relay
A22 Air Inlet Control Servo Motor
A23 Air Mix Control Servo Motor (Driver Side)
A24 Air Mix Control Servo Motor (Front Passenger Side)
A25 Air Outlet Control Servo Motor
A26 Airbag Squib (Front Passenger Airbag Assembly)
A27 Airbag Squib (Steering Wheel Pad)
A28 Automatic Light Control Sensor

B 2 Blower Motor
B 3 Blower Resistor
B 4 Body ECU
B 5 Body ECU

C 5 Center Airbag Sensor Assembly
C 6 Center Airbag Sensor Assembly
C 7 Center Airbag Sensor Assembly
C 8 Cigarette Lighter
C 9 Combination Meter
C10 Combination Meter
C11 Combination SW
C12 Combination SW
C13 Combination SW
C14 Combination SW
C15 Cruise Control ECU

D 2 Data Link Connector 2
D 3 Data Link Connector 3
D 4 Diode (A/C)
D 5 Diode (A/T Indicator Light 1)

E 4 Engine Control Module
E 5 Engine Control Module
E 6 Engine Control Module
E 7 Engine Control Module
E 8 Engine Control Module

Position of Parts in Instrument Panel

[Floor Shift]

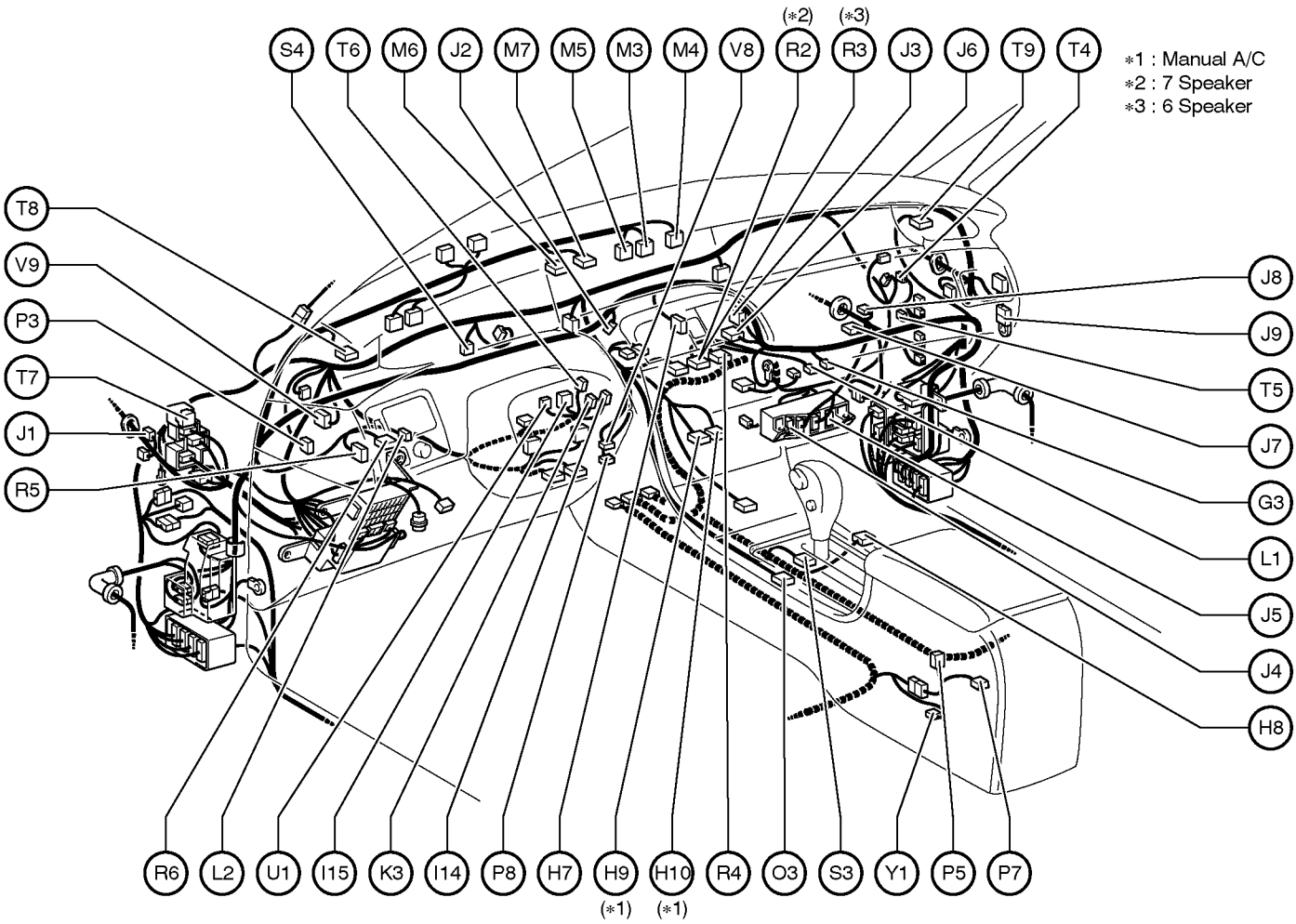

G 3 Glove Box Light SW

H 7 Hazard SW
H 8 Heated Oxygen Sensor (Bank 1 Sensor 2)
H 9 Heater Control SW
H10 Heater Control SW

I 14 Ignition Key Cylinder Light
I 15 Ignition SW

J 1 Junction Connector
J 2 Junction Connector
J 3 Junction Connector
J 4 Junction Connector
J 5 Junction Connector
J 6 Junction Connector
J 7 Junction Connector
J 8 Junction Connector
J 9 Junction Connector

K 3 Key Interlock Solenoid

L 1 Luggage Compartment Door Opener Main SW
L 2 Luggage Compartment Door Opener SW

M 3 Multi Display
M 4 Multi Display
M 5 Multi Display
M 6 Multi Display
M 7 Multi Display

O 3 O/D Main SW

P 3 Parking Brake SW
P 5 Power Outlet
P 7 Power Outlet
P 8 Power Outlet Main SW

R 2 Radio and Player
R 3 Radio and Player
R 4 Radio and Player
R 5 Remote Control Mirror SW
R 6 Rheostat

S 3 Shift Lock ECU
S 4 Stop Light SW

T 4 Theft Deterrent ECU
T 5 Translate ECU
T 6 Transponder Key Amplifier
T 7 Turn Signal Flasher Relay
T 8 Tweeter LH
T 9 Tweeter RH

U 1 Unlock Warning SW

V 8 VSC Off SW
V 9 VSC Warning Buzzer

Y 1 Yaw Rate Sensor

Position of Parts in Body

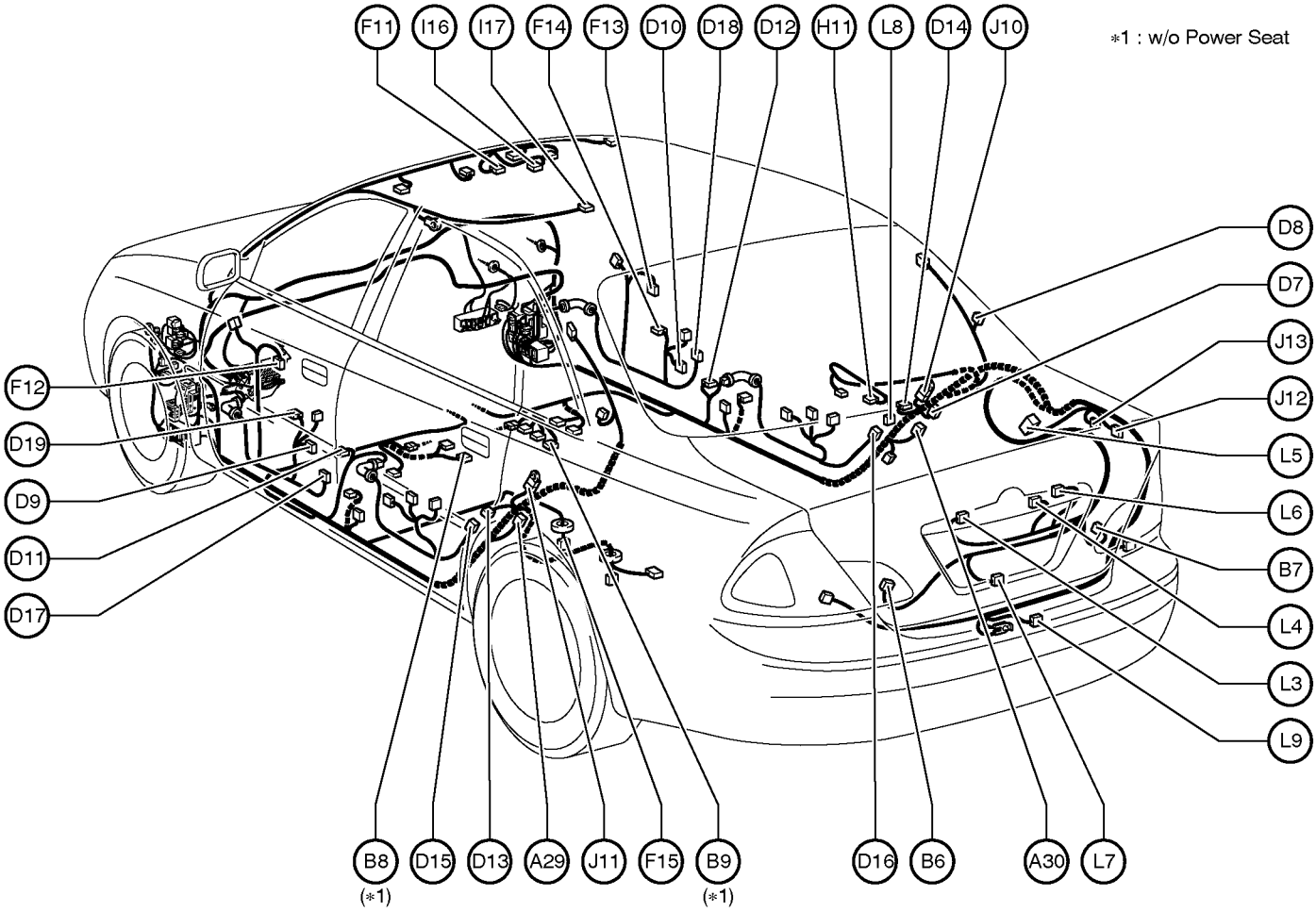

A29 ABS Speed Sensor Rear LH
A30 ABS Speed Sensor Rear RH

B 6 Back-Up Light LH
B 7 Back-Up Light RH
B 8 Buckle SW LH
B 9 Buckle SW RH

D 7 Diode (Luggage Compartment Light)
D 8 Door Control Receiver
D 9 Door Courtesy Light Front LH
D10 Door Courtesy Light Front RH
D11 Door Courtesy SW Front LH
D12 Door Courtesy SW Front RH
D13 Door Courtesy SW Rear LH
D14 Door Courtesy SW Rear RH
D15 Door Lock Motor Rear LH
D16 Door Lock Motor Rear RH
D17 Door Lock Motor,Door Key Lock and Unlock SW and Door Unlock Detection SW Front LH
D18 Door Lock Motor,Door Key Lock and Unlock SW and Door Unlock Detection SW Front RH
D19 Driver Door ECU

F 11 Field Magnetic Sensor
F 12 Front Door Speaker LH
F 13 Front Door Speaker RH
F 14 Front Passenger Door ECU
F 15 Fuel Pump and Sender

H 11 High Mounted Stop Light

I 16 Inner Mirror
I 17 Interior Light

J 10 Junction Connector
J 11 Junction Connector
J 12 Junction Connector
J 13 Junction Connector

L 3 License Plate Light LH
L 4 License Plate Light RH
L 5 Light Failure Sensor
L 6 Luggage Compartment Door Key Unlock SW
L 7 Luggage Compartment Door Unlock Motor
L 8 Luggage Compartment Light
L 9 Luggage Compartment Light SW

Position of Parts in Body

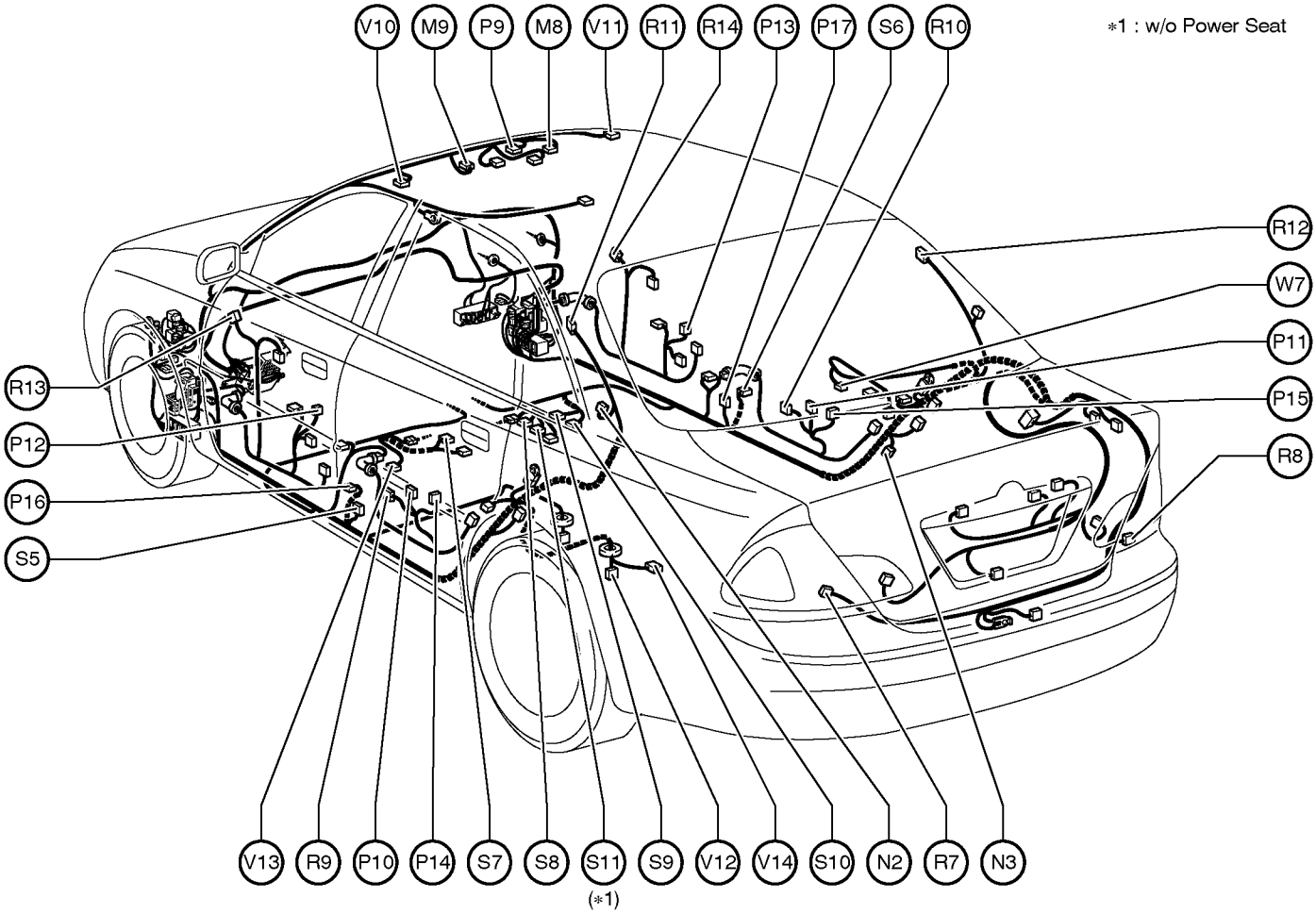

M 8 Moon Roof Control ECU
M 9 Moon Roof Control SW

N 2 Noise Filter (Rear Window Defogger)
N 3 Noise Filter
(Stop Light and Luggage Compartment Light)

P 9 Personal Light
P10 Power Window Control SW Rear LH
P11 Power Window Control SW Rear RH
P12 Power Window Motor Front LH
P13 Power Window Motor Front RH
P14 Power Window Motor Rear LH
P15 Power Window Motor Rear RH
P16 Pretensioner LH
P17 Pretensioner RH

R 7 Rear Combination Light LH
R 8 Rear Combination Light RH
R 9 Rear Door Speaker LH
R10 Rear Door Speaker RH
R11 Rear Interior Light LH
R12 Rear Interior Light RH
R13 Remote Control Mirror LH
R14 Remote Control Mirror RH

S 5 Side Airbag Sensor LH
S 6 Side Airbag Sensor RH
S 7 Side Airbag Squib LH
S 8 Side Airbag Squib RH
S 9 Stereo Component Amplifier
S10 Stereo Component Amplifier
S11 Seat Belt Warning Occupant Detection Sensor

V10 Vanity Light LH and Garage Door Opener
V11 Vanity Light RH
V12 Vapor Pressure Sensor
V13 Voltage Inverter
V14 VSV (Pressure Switching Valve)

W 7 Woofer

Position of Parts in Seat

[Column Shift]

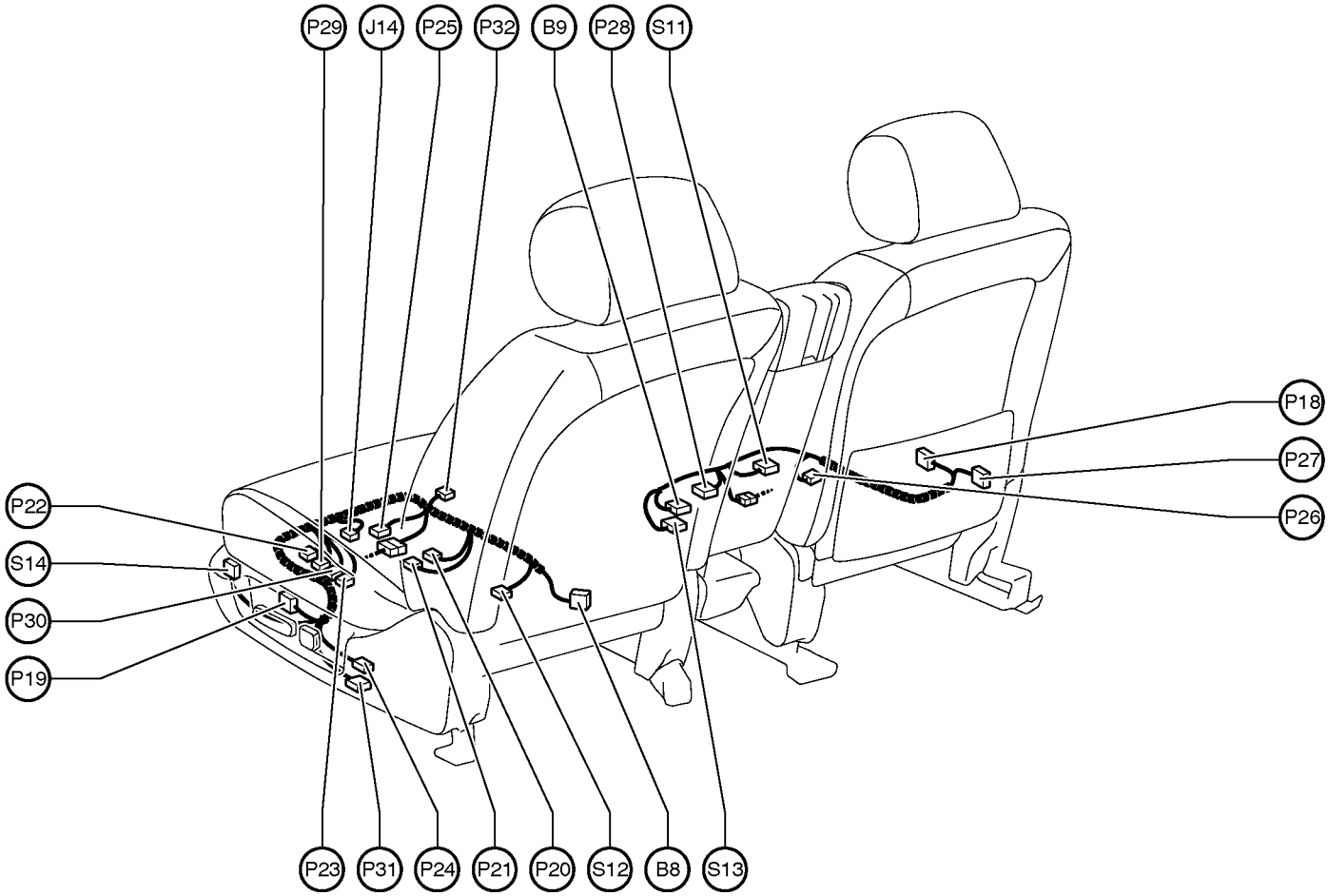

B 8 Buckle SW LH
B 9 Buckle SW RH

J 14 Junction Connector

P 18 Power Seat Control SW (Driver's Seat)
P 19 Power Seat Control SW (Front Passenger's Seat)
P 20 Power Seat ECU
P 21 Power Seat ECU
P 22 Power Seat Motor (Driver's Seat Front Vertical Control)
P 23 Power Seat Motor (Driver's Seat Rear Vertical Control)
P 24 Power Seat Motor (Driver's Seat Reclining Control)
P 25 Power Seat Motor (Driver's Seat Slide Control)
P 26 Power Seat Motor
(Front Passenger's Seat Rear Vertical Control)
P 27 Power Seat Motor
(Front Passenger's Seat Reclining Control)
P 28 Power Seat Motor
(Front Passenger's Seat Slide Control)
P 29 Power Seat Position Sensor
(Driver's Seat Front Vertical Control)
P 30 Power Seat Position Sensor
(Driver's Seat Rear Vertical Control)
P 31 Power Seat Position Sensor
(Driver's Seat Reclining Control)
P 32 Power Seat Position Sensor (Driver's Seat Slide Control)

S 11 Seat Belt Warning Occupant Detection Sensor
S 12 Seat Heater (Driver's Seat)
S 13 Seat Heater (Front Passenger's Seat)
S 14 Seat Memory SW

Position of Parts in Seat

[Floor Shift]

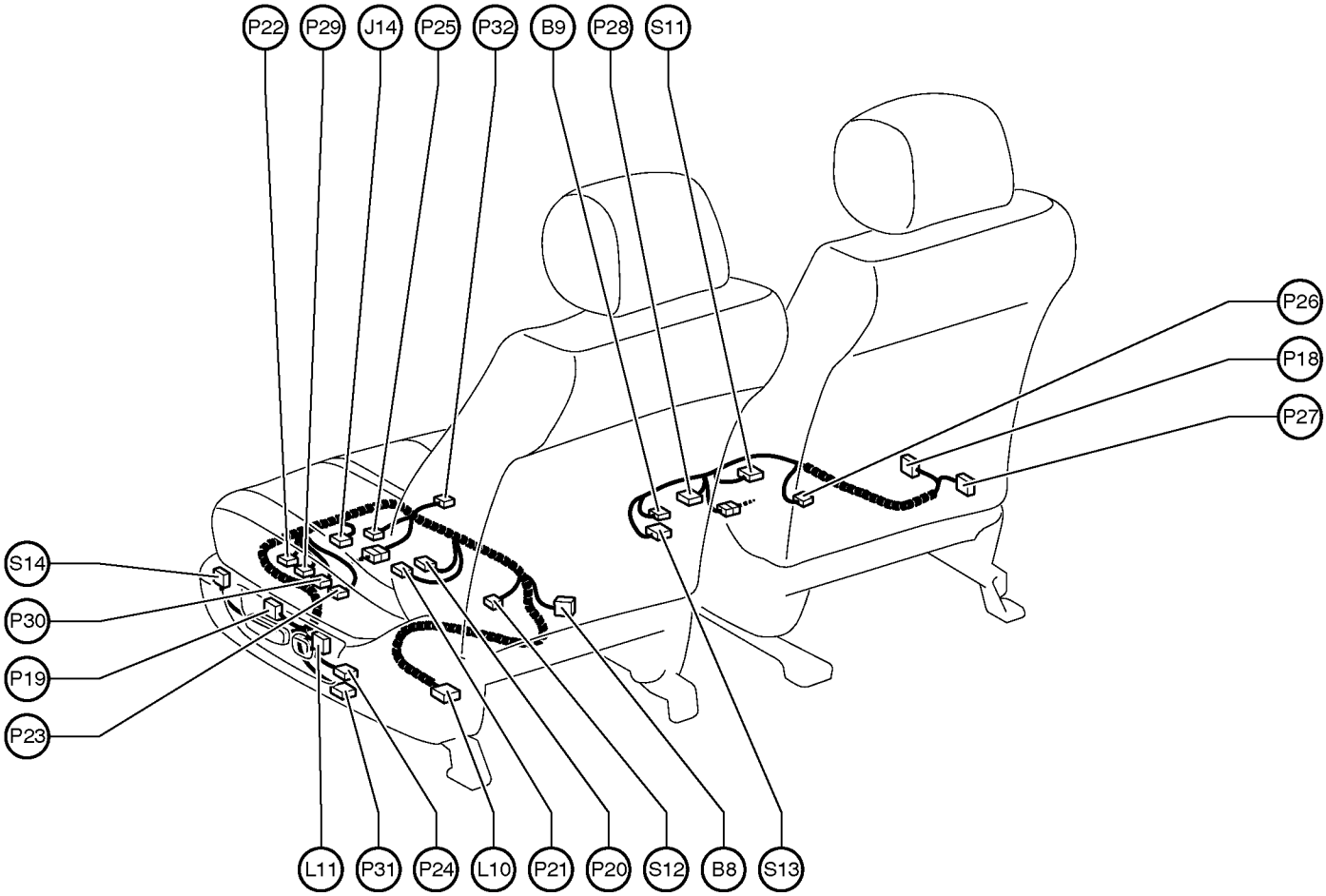

B 8 Buckle SW LH
B 9 Buckle SW RH

J 14 Junction Connector

L 10 Lumbar Support Control Motor (Driver's Seat)
L 11 Lumbar Support Control SW (Driver's Seat)

P 18 Power Seat Control SW (Driver's Seat)
P 19 Power Seat Control SW (Front Passenger's Seat)
P 20 Power Seat ECU
P 21 Power Seat ECU
P 22 Power Seat Motor (Driver's Seat Front Vertical Control)
P 23 Power Seat Motor (Driver's Seat Rear Vertical Control)
P 24 Power Seat Motor (Driver's Seat Reclining Control)
P 25 Power Seat Motor (Driver's Seat Slide Control)
P 26 Power Seat Motor
(Front Passenger's Seat Rear Vertical Control)
P 27 Power Seat Motor
(Front Passenger's Seat Reclining Control)
P 28 Power Seat Motor
(Front Passenger's Seat Slide Control)
P 29 Power Seat Position Sensor
(Driver's Seat Front Vertical Control)
P 30 Power Seat Position Sensor
(Driver's Seat Rear Vertical Control)
P 31 Power Seat Position Sensor
(Driver's Seat Reclining Control)
P 32 Power Seat Position Sensor (Driver's Seat Slide Control)

S 11 Seat Belt Warning Occupant Detection Sensor
S 12 Seat Heater (Driver's Seat)
S 13 Seat Heater (Front Passenger's Seat)
S 14 Seat Memory SW

E GLOSSARY OF TERMS AND SYMBOLS

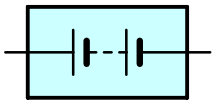

BATTERY
Stores chemical energy and converts it into electrical energy. Provides DC current for the auto's various electrical circuits.

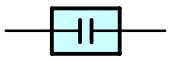

CAPACITOR (Condenser)
A small holding unit for temporary storage of electrical voltage.

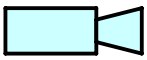

CIGARETTE LIGHTER
An electric resistance heating element.

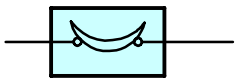

CIRCUIT BREAKER
Basically a reusable fuse, a circuit breaker will heat and open if too much current flows through it. Some units automatically reset when cool, others must be manually reset.



DIODE
A semiconductor which allows current flow in only one direction.

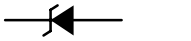

DIODE, ZENER
A diode which allows current flow in one direction but blocks reverse flow only up to a specific voltage. Above that potential, it passes the excess voltage. This acts as a simple voltage regulator.



PHOTODIODE
The photodiode is a semiconductor which controls the current flow according to the amount of light.

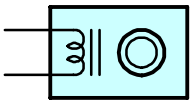

DISTRIBUTOR, IIA
Channels high-voltage current from the ignition coil to the individual spark plugs.

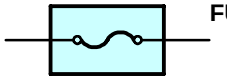

FUSE
A thin metal strip which burns through when too much current flows through it, thereby stopping current flow and protecting a circuit from damage.

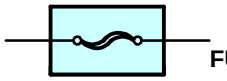

(for Medium Current Fuse)

FUSIBLE LINK
A heavy-gauge wire placed in high amperage circuits which burns through on overloads, thereby protecting the circuit. The numbers indicate the crosssection surface area of the wires.

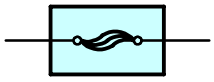

(for High Current Fuse or Fusible Link)



GROUND
The point at which wiring attaches to the Body, thereby providing a return path for an electrical circuit; without a ground, current cannot flow.

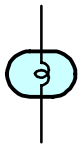

1. SINGLE FILAMENT



2. DOUBLE FILAMENT

HEADLIGHTS
Current flow causes a headlight filament to heat up and emit light. A headlight may have either a single (1) filament or a double (2) filament

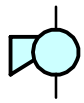

HORN
An electric device which sounds a loud audible signal.

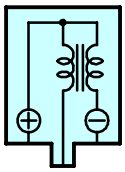

IGNITION COIL
Converts low-voltage DC current into high-voltage ignition current for firing the spark plugs.



LIGHT
Current flow through a filament causes the filament to heat up and emit light.

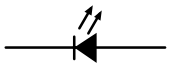

LED (LIGHT EMITTING DIODE)
Upon current flow, these diodes emit light without producing the heat of a comparable light.



METER, ANALOG
Current flow activates a magnetic coil which causes a needle to move, thereby providing a relative display against a background calibration.



METER, DIGITAL
Current flow activates one or many LED's, LCD's, or fluorescent displays, which provide a relative or digital display.



MOTOR
A power unit which converts electrical energy into mechanical energy, especially rotary motion.

RELAY

Basically, an electrically operated switch which may be normally closed (1) or open (2). Current flow through a small coil creates a magnetic field which either opens or closes an attached switch.

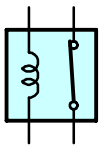

1. NORMALLY CLOSED

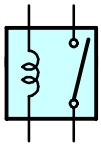

2. NORMALLY OPEN

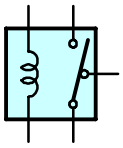

RELAY, DOUBLE THROW

A relay which passes current through one set of contacts or the other.

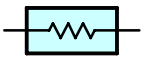

RESISTOR

An electrical component with a fixed resistance, placed in a circuit to reduce voltage to a specific value.

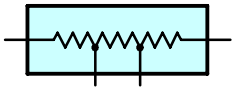

RESISTOR, TAPPED

A resistor which supplies two or more different non adjustable resistance values.



RESISTOR, VARIABLE or RHEOSTAT

A controllable resistor with a variable rate of resistance.
Also called a potentiometer or rheostat.

SENSOR (Thermistor)

A resistor which varies its resistance with temperature.

SENSOR, SPEED

Uses magnetic impulses to open and close a switch to create a signal for activation of other components.

(Reed Switch Type)

SHORT PIN

Used to provide an unbroken connection within a junction block.

SOLENOID

An electromagnetic coil which forms a magnetic field when current flows, to move a plunger, etc.

SPEAKER

An electromechanical device which creates sound waves from current flow.



SWITCH, MANUAL

Opens and closes circuits, thereby stopping (1) or allowing (2) current flow.

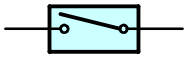

1. NORMALLY OPEN

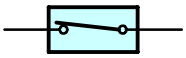

2. NORMALLY CLOSED

SWITCH, DOUBLE THROW

A switch which continuously passes current through one set of contacts or the other.

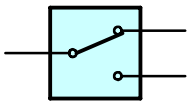

SWITCH, IGNITION

A key operated switch with several positions which allows various circuits, particularly the primary ignition circuit, to become operational.

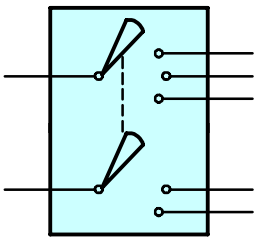

SWITCH, WIPER PARK

Automatically returns wipers to the stop position when the wiper switch is turned off.

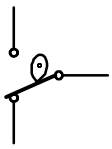

TRANSISTOR

A solidstate device typically used as an electronic relay; stops or passes current depending on the voltage applied at "base".

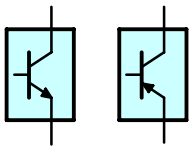

WIRES

Wires are always drawn as straight lines on wiring diagrams.
Crossed wires (1) without a black dot at the junction are not joined;
crossed wires (2) with a black dot or octagonal ( ) mark at the junction are spliced (joined) connections.

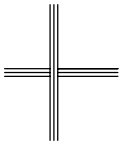

(1) NOT CONNECTED

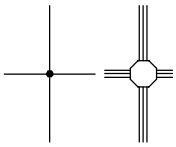

(2) SPLICED

I GROUND POINT

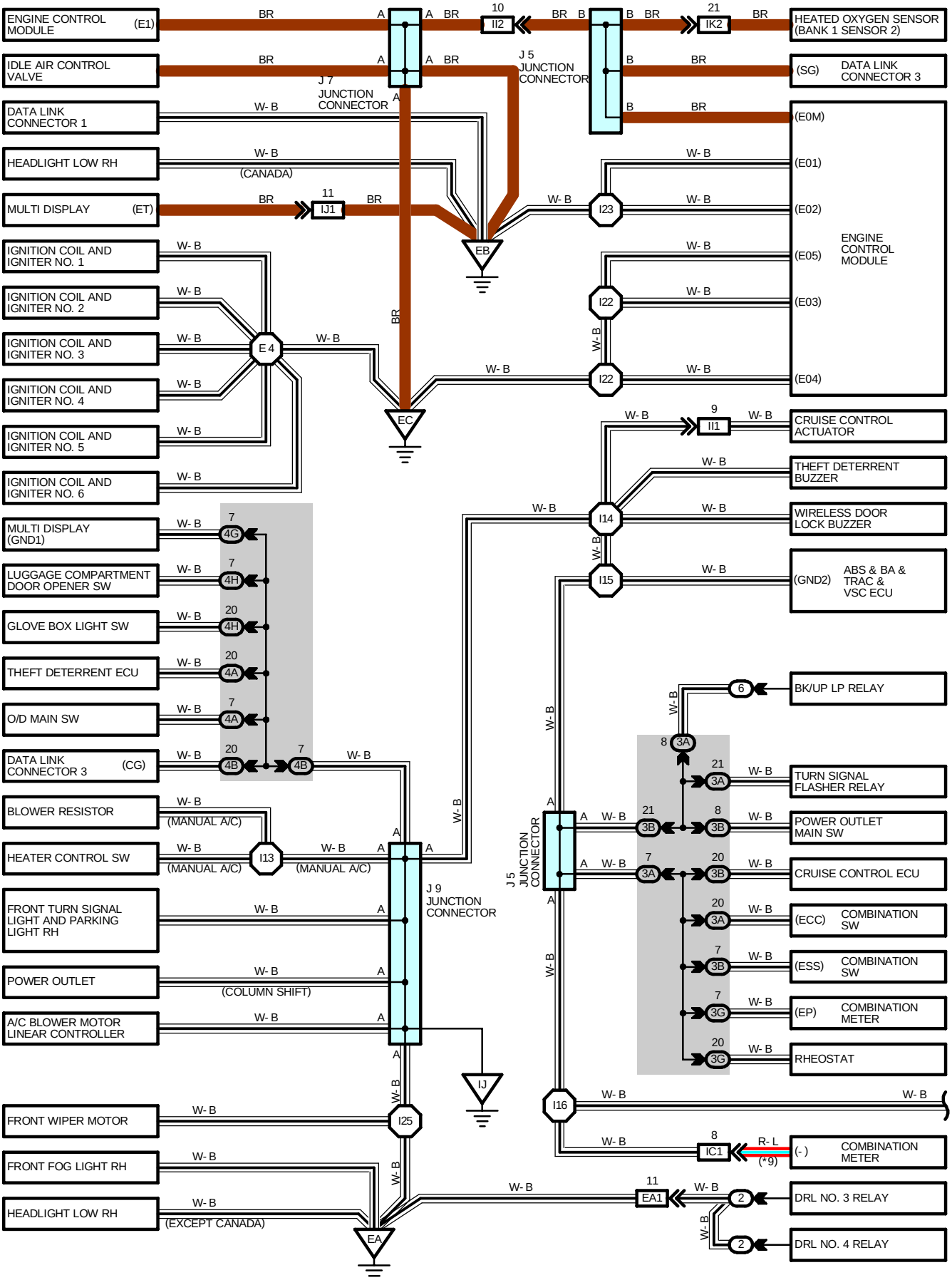

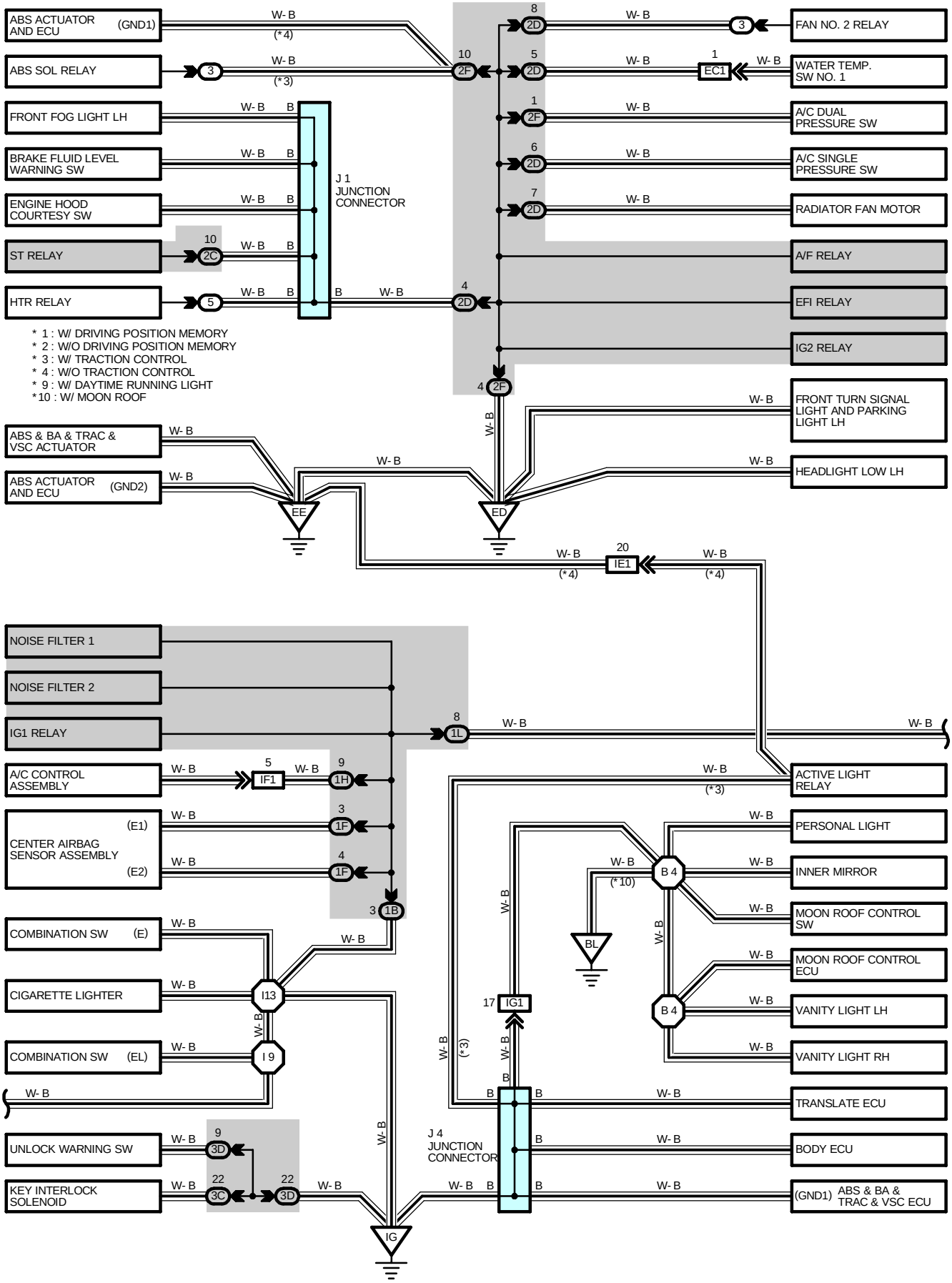
ABS ACTUATOR AND ECU (GND1)
ABS SOL RELAY
FRONT FOG LIGHT LH
BRAKE FLUID LEVEL WARNING SW
ENGINE HOOD COURTESY SW
ST RELAY
HTR RELAY
J 1 JUNCTION CONNECTOR
FAN NO. 2 RELAY
WATER TEMP. SW NO. 1
A/C DUAL PRESSURE SW
A/C SINGLE PRESSURE SW
RADIATOR FAN MOTOR
A/F RELAY
EFI RELAY
IG2 RELAY
* 1 : W/ DRIVING POSITION MEMORY
* 2 : W/O DRIVING POSITION MEMORY
* 3 : W/ TRACTION CONTROL
* 4 : W/O TRACTION CONTROL
* 9 : W/ DAYTIME RUNNING LIGHT
*10 : W/ MOON ROOF
FRONT TURN SIGNAL LIGHT AND PARKING LIGHT LH
HEADLIGHT LOW LH
ABS & BA & TRAC & VSC ACTUATOR
ABS ACTUATOR AND ECU (GND2)
EE
ED
NOISE FILTER 1
NOISE FILTER 2
IG1 RELAY
A/C CONTROL ASSEMBLY
CENTER AIRBAG SENSOR ASSEMBLY (E1)
CENTER AIRBAG SENSOR ASSEMBLY (E2)
COMBINATION SW (E)
CIGARETTE LIGHTER
COMBINATION SW (EL)
UNLOCK WARNING SW
KEY INTERLOCK SOLENOID
IG
ACTIVE LIGHT RELAY
PERSONAL LIGHT
INNER MIRROR
MOON ROOF CONTROL SW
MOON ROOF CONTROL ECU
VANITY LIGHT LH
VANITY LIGHT RH
TRANSLATE ECU
BODY ECU
(GND1) ABS & BA & TRAC & VSC ECU
J 4 JUNCTION CONNECTOR
BL

I GROUND POINT

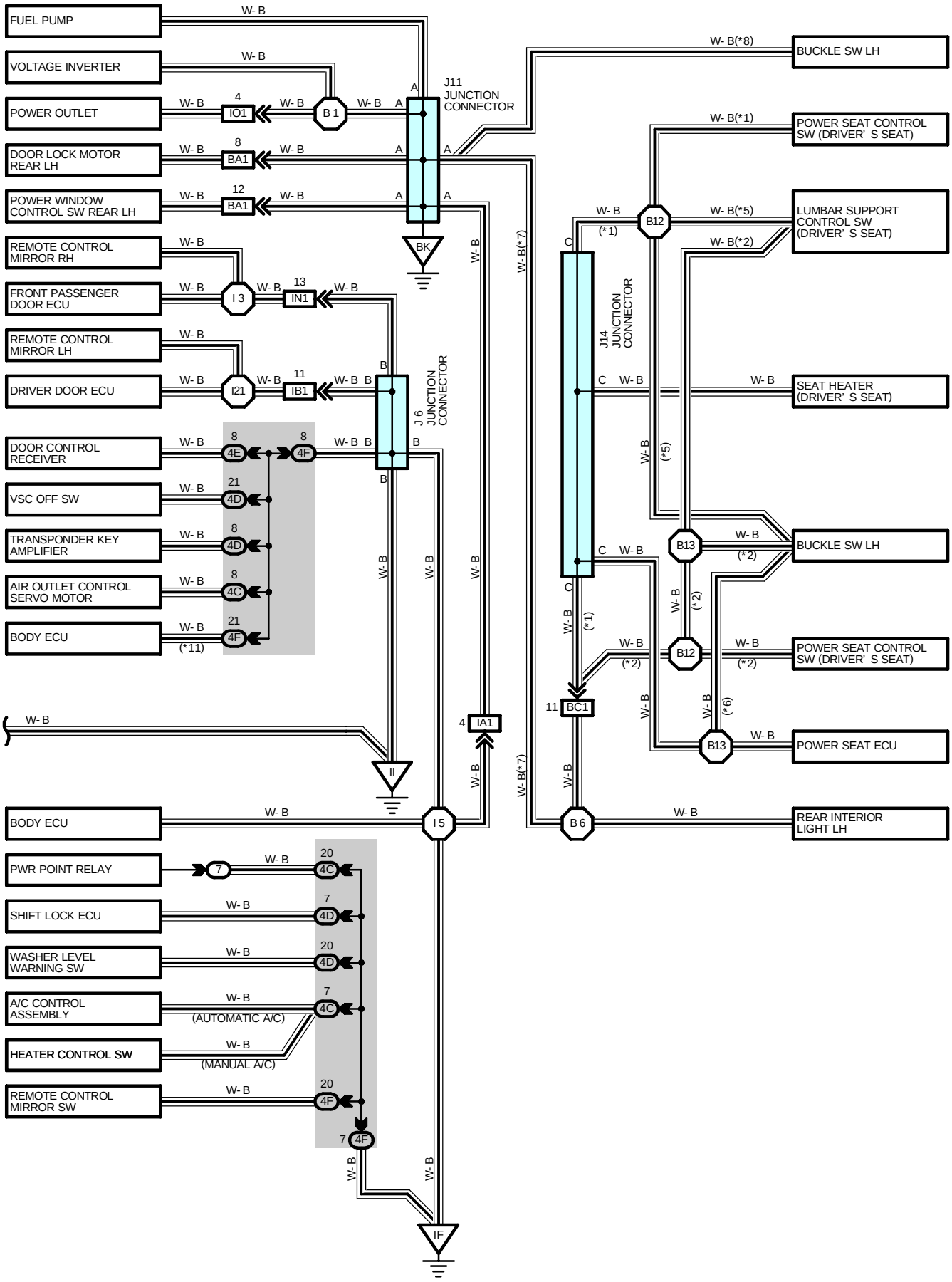

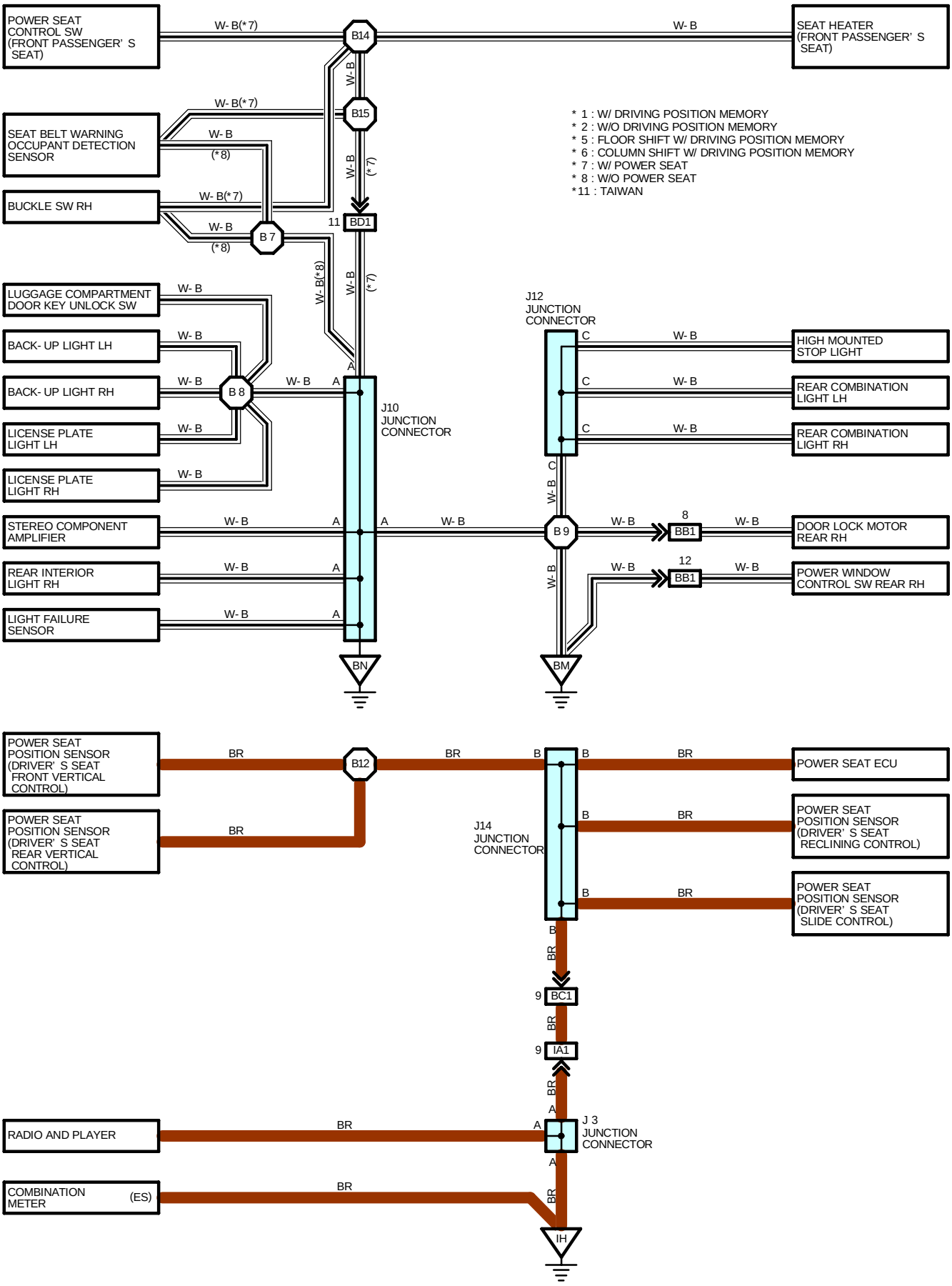
POWER SEAT CONTROL SW (FRONT PASSENGER' S SEAT)
W- B(*7)
B14
W- B
SEAT HEATER (FRONT PASSENGER' S SEAT)
W- B
B15
W- B(*7)
SEAT BELT WARNING OCCUPANT DETECTION SENSOR
W- B (*8)
W- B
(*7)
BUCKLE SW RH
W- B(*7)
11
BD1
W- B (*8)
B 7
W- B(*8)
W- B
(*7)
* 1 : W/ DRIVING POSITION MEMORY
* 2 : W/O DRIVING POSITION MEMORY
* 5 : FLOOR SHIFT W/ DRIVING POSITION MEMORY
* 6 : COLUMN SHIFT W/ DRIVING POSITION MEMORY
* 7 : W/ POWER SEAT
* 8 : W/O POWER SEAT
*11 : TAIWAN
LUGGAGE COMPARTMENT DOOR KEY UNLOCK SW
W- B
BACK- UP LIGHT LH
W- B
BACK- UP LIGHT RH
W- B
B 8
W- B
A
J10 JUNCTION CONNECTOR
LICENSE PLATE LIGHT LH
W- B
LICENSE PLATE LIGHT RH
W- B
J12 JUNCTION CONNECTOR
C
W- B
HIGH MOUNTED STOP LIGHT
C
W- B
REAR COMBINATION LIGHT LH
C
W- B
REAR COMBINATION LIGHT RH
C
W- B
STEREO COMPONENT AMPLIFIER
W- B
A
A
W- B
B 9
W- B
8
BB1
W- B
DOOR LOCK MOTOR REAR RH
REAR INTERIOR LIGHT RH
W- B
A
W- B
12
BB1
W- B
POWER WINDOW CONTROL SW REAR RH
LIGHT FAILURE SENSOR
W- B
A
BN
BM
POWER SEAT POSITION SENSOR (DRIVER' S SEAT FRONT VERTICAL CONTROL)
BR
B12
BR
B
B
BR
POWER SEAT ECU
POWER SEAT POSITION SENSOR (DRIVER' S SEAT REAR VERTICAL CONTROL)
BR
J14 JUNCTION CONNECTOR
B
BR
POWER SEAT POSITION SENSOR (DRIVER' S SEAT RECLINING CONTROL)
B
BR
POWER SEAT POSITION SENSOR (DRIVER' S SEAT SLIDE CONTROL)
B
BR
9
BC1
BR
9
IA1
BR
A
RADIO AND PLAYER
BR
A
J 3 JUNCTION CONNECTOR
A
COMBINATION METER
(ES)
BR
BR
IH

I GROUND POINT

: PARTS LOCATION

Code	See Page	Code	See Page	Code	See Page
J1	47 (Column Shift)	J5	49 (Floor Shift)	J10	50
	49 (Floor Shift)	J6	47 (Column Shift)	J11	50
J3	47 (Column Shift)		49 (Floor Shift)	J12	50
	49 (Floor Shift)	J7	47 (Column Shift)	J14	52 (Column Shift)
J4	47 (Column Shift)		49 (Floor Shift)		53 (Floor Shift)
	49 (Floor Shift)	J9	47 (Column Shift)		
J5	47 (Column Shift)		49 (Floor Shift)		

: RELAY BLOCKS

Code	See Page	Relay Blocks (Relay Block Location)
2	24	Engine Room R/B No.2 (Engine Compartment Right)
3	24	Engine Room R/B No.3 (Near the Radiator Fan)
5	25	Engine Room R/B No.5 (Engine Compartment Left)
6	42	Driver Side R/B No.6 (Left Kick Panel)
7	42	Front Passenger Side R/B No.7 (Right Kick Panel)

: JUNCTION BLOCK AND WIRE HARNESS CONNECTOR

Code	See Page	Junction Block and Wire Harness (Connector Location)
1B	27	Cowl Wire and Driver Side J/B (Lower Finish Panel)
1F		
1H	27	Engine Room Main Wire and Driver Side J/B (Lower Finish Panel)
1L	26	Instrument Panel Wire and Driver Side J/B (Lower Finish Panel)
2C	30	Engine Room Main Wire and Engine Room J/B (Engine Compartment Left)
2D		
2F		
3A	34	Cowl Wire and J/B No.3 (Left Kick Panel)
3B		
3C	34	Cowl Wire and J/B No.3 (Left Kick Panel)
3D		
3G	35	Instrument Panel Wire and J/B No.3 (Left Kick Panel)
4A	38	Cowl Wire and J/B No.4 (Right Kick Panel)
4B		
4C		
4D		
4E	39	Floor No.2 Wire and J/B No.4 (Right Kick Panel)
4F	39	Instrument Panel Wire and J/B No.4 (Right Kick Panel)
4G		
4H		

: CONNECTOR JOINING WIRE HARNESS AND WIRE HARNESS

Code	See Page	Joining Wire Harness and Wire Harness (Connector Location)
EA1	54	Cowl Wire and Engine Room No.2 Wire (Near the Engine Room R/B No.2)
EC1	54	Engine Room Main Wire and Engine Room No.3 Wire (Near the Radiator Fan)
IA1	56 (Column Shift) 60 (Floor Shift)	Floor No.1 Wire and Instrument Panel Wire (Left Kick Panel)
IB1	56 (Column Shift) 60 (Floor Shift)	Front Door LH Wire and Instrument Panel Wire (Left Kick Panel)
IC1	56 (Column Shift) 60 (Floor Shift)	Cowl Wire and Instrument Panel Wire (Left Kick Panel)
IE1	56 (Column Shift) 60 (Floor Shift)	Engine Room Main Wire and Cowl Wire (Behind the Driver Side J/B)
IF1	56 (Column Shift) 60 (Floor Shift)	Engine Room Main Wire and Cowl Wire (Left Side of Instrument Panel)
IG1	56 (Column Shift) 60 (Floor Shift)	Roof Wire and Cowl Wire (Front Left Pillar)
II1	58 (Column Shift) 62 (Floor Shift)	Engine Wire and Cowl Wire (Behind the Glove Box)
II2	58 (Column Shift) 62 (Floor Shift)	
IJ1	58 (Column Shift) 62 (Floor Shift)	Engine Wire and Instrument Panel Wire (Right Kick Panel)
IK2	58 (Column Shift) 62 (Floor Shift)	Floor No.2 Wire and Cowl Wire (Right Kick Panel)
IN1	58 (Column Shift) 62 (Floor Shift)	Front Door RH Wire and Instrument Panel Wire (Right Kick Panel)
IO1	62 (Floor Shift)	Floor No.3 Wire and Floor No.1 Wire (Under the Console Box)
BA1	64	Rear Door No.2 Wire and Floor No.1 Wire (Under the Left Center Pillar)
BB1	64	Rear Door No.1 Wire and Floor No.2 Wire (Under the Right Center Pillar)
BC1	66 (Column Shift) 68 (Floor Shift)	Floor No.1 Wire and Seat No.1 Wire (Under the Driver's Seat)
BD1	66 (Column Shift) 68 (Floor Shift)	Floor No.2 Wire and Seat No.2 Wire (Under the Front Passenger's Seat)

I GROUND POINT

▽ : GROUND POINTS

Code	See Page	Ground Points Location
EA	54	Front Side of Right Fender
EB	54	Surge Tank RH
EC	54	Rear Side of Surge Tank
ED	54	Front Side of Left Fender
EE		
IF	56 (Column Shift)	Left Kick Panel
	60 (Floor Shift)	
IG	56 (Column Shift)	Cowl Side Panel LH
	60 (Floor Shift)	
IH	56 (Column Shift)	Instrument Panel Brace RH
	60 (Floor Shift)	
II	56 (Column Shift)	Right Kick Panel
	60 (Floor Shift)	
IJ	56 (Column Shift)	Cowl Side Panel RH
	60 (Floor Shift)	
BK	64	Rear Quarter Inner LH
BL	64	Roof Left
BM	64	Back Panel Center
BN	64	Rear Quarter Inner RH

○ : SPLICE POINTS

Code	See Page	Wire Harness with Splice Points	Code	See Page	Wire Harness with Splice Points
E4	54	Engine Wire	I23	58 (Column Shift)	Engine Wire
				62 (Floor Shift)	
I3	58 (Column Shift)	Front Door LH Wire	I25	58 (Column Shift)	Cowl Wire
	62 (Floor Shift)			62 (Floor Shift)	
I5	58 (Column Shift)	Instrument Panel Wire	B1	64	Floor No.1 Wire
	62 (Floor Shift)				
I9	58 (Column Shift)	Cowl Wire	B4	64	Roof Wire
	62 (Floor Shift)		B6	64	Floor No.1 Wire
I13	58 (Column Shift)		B7	64	Floor No.2 Wire
	62 (Floor Shift)		B8		
I14	58 (Column Shift)		B9		
	62 (Floor Shift)		B12	66 (Column Shift)	Seat No.1 Wire
I15	58 (Column Shift)			68 (Floor Shift)	
	62 (Floor Shift)		B13	66 (Column Shift)	
I16	58 (Column Shift)			68 (Floor Shift)	
	62 (Floor Shift)		B14	66 (Column Shift)	Seat No.2 Wire
I21	58 (Column Shift)	Front Door RH Wire		68 (Floor Shift)	
	62 (Floor Shift)		B15	66 (Column Shift)	
I22	58 (Column Shift)	Engine Wire		68 (Floor Shift)	
	62 (Floor Shift)				

This manual provides information on the electrical circuits installed on vehicles by dividing them into a circuit for each system.

The actual wiring of each system circuit is shown from the point where the power source is received from the battery as far as each ground point. (All circuit diagrams are shown with the switches in the OFF position.)

When troubleshooting any problem, first understand the operation of the circuit where the problem was detected (see System Circuit section), the power source supplying power to that circuit (see Power Source section), and the ground points (see Ground Point section). See the System Outline to understand the circuit operation.

When the circuit operation is understood, begin troubleshooting of the problem circuit to isolate the cause. Use Relay Location and Electrical Wiring Routing sections to find each part, junction block and wiring harness connectors, wiring harness and wiring harness connectors, splice points, and ground points of each system circuit. Internal wiring for each junction block is also provided for better understanding of connection within a junction block.
Wiring related to each system is indicated in each system circuit by arrows (from__, to__). When overall connections are required, see the Overall Electrical Wiring Diagram at the end of this manual.

[A]

STOP LIGHT

* The system shown here is an EXAMPLE ONLY. It is different to the actual circuit shown in the SYSTEM CIRCUITS SECTION.

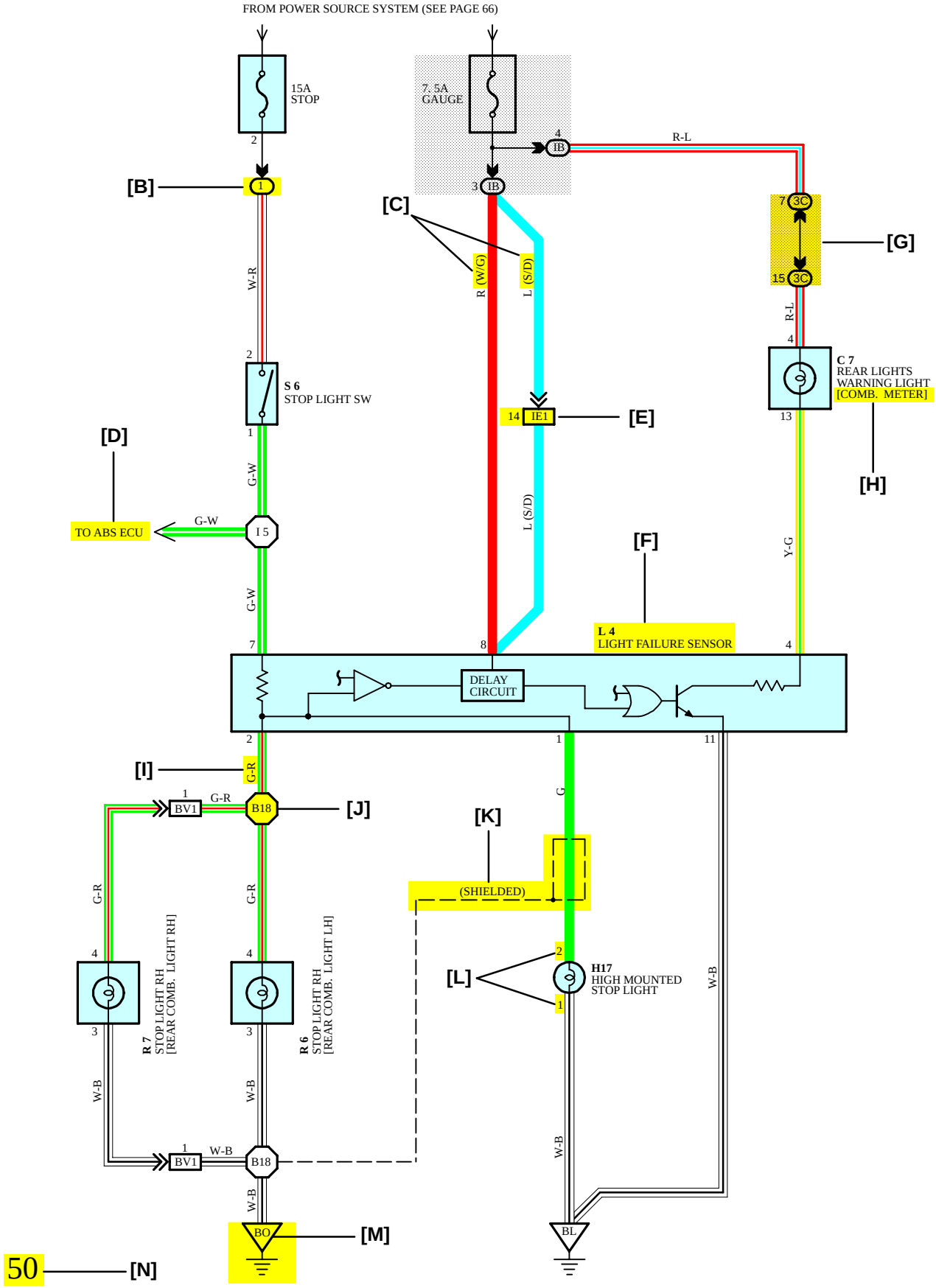

[A] : System Title

[B] : Indicates a Relay Block. No shading is used and only the Relay Block No. is shown to distinguish it from the J/B

Example: (1) Indicates Relay Block No.1

[C] : ( ) is used to indicate different wiring and connector, etc. when the vehicle model, engine type, or specification is different.

[D] : Indicates related system.

[E] : Indicates the wiring harness and wiring harness connector. The wiring harness with male terminal is shown with arrows (»).
Outside numerals are pin numbers.

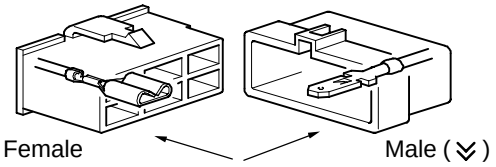

The first letter of the code for each wiring harness and wiring harness connector(s) indicates the component's location, e.g, "E" for the Engine Compartment, "I" for the Instrument Panel and Surrounding area, and "B" for the Body and Surrounding area.

When more than one code has the first and second letters in common, followed by numbers (e.g, IH1, IH2), this indicates the same type of wiring harness and wiring harness connector.

[F] : Represents a part (all parts are shown in sky blue). The code is the same as the code used in parts position.

[G] : Junction Block (The number in the circle is the J/B No. and the connector code is shown beside it). Junction Blocks are shaded to clearly separate them from other parts.

Example:

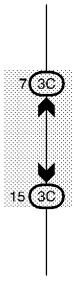

3C indicates that it is inside Junction Block No.3

[H] : When 2 parts both use one connector in common, the parts connector name used in the wire routing section is shown in square brackets [ ].

[I] : Indicates the wiring color.

Wire colors are indicated by an alphabetical code.

B	= Black	W	= White	BR	= Brown
L	= Blue	V	= Violet	SB	= Sky Blue
R	= Red	G	= Green	LG	= Light Green
P	= Pink	Y	= Yellow	GR	= Gray
O	= Orange				

The first letter indicates the basic wire color and the second letter indicates the color of the stripe.

Example: L - Y

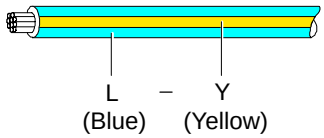

[J] : Indicates a wiring Splice Point (Codes are "E" for the Engine Room, "I" for the Instrument Panel, and "B" for the Body).

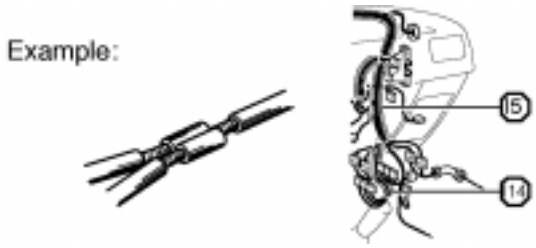

The Location of splice Point I 5 is indicated by the shaded section.

[K] : Indicates a shielded cable.

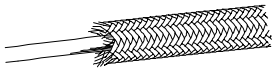

[L] : Indicates the pin number of the connector.
The numbering system is different for female and male connectors.

Example:

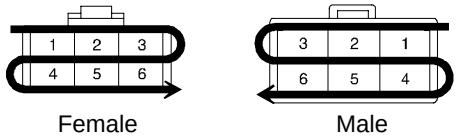

[M] : Indicates a ground point.

The first letter of the code for each ground point(s) indicates the component's location, e.g, "E" for the Engine Compartment, "I" for the Instrument Panel and Surrounding area, and "B" for the Body and Surrounding area.

[N] : Page No.

[O] **SYSTEM OUTLINE**

Current is applied at all times through the STOP fuse to TERMINAL 2 of the stop light SW.
When the ignition SW is turned on, current flows from the GAUGE fuse to TERMINAL 8 of the light failure sensor, and also flows through the rear lights warning light to TERMINAL 4 of the light failure sensor.

STOP LIGHT DISCONNECTION WARNING

When the ignition SW is turned on and the brake pedal is pressed (Stop light SW on), if the stop light circuit is open, the current flowing from TERMINAL 7 of the light failure sensor to TERMINALS 1, 2 changes, so the light failure sensor detects the disconnection and the warning circuit of the light failure sensor is activated.
As a result, the current flows from TERMINAL 4 of the light failure sensor to TERMINAL 11 to GROUND and turns the rear lights warning light on. By pressing the brake pedal, the current flowing to TERMINAL 8 of the light failure sensor keeps the warning circuit on and holds the warning light on until the ignition SW is turned off.

[P] **SERVICE HINTS**

S6 STOP LIGHT SW

2-1 : Closed with the brake pedal depressed

L4 LIGHT FAILURE SENSOR

1, 2, 7-GROUND : Approx. **12** volts with the stop light SW on
4, 8-GROUND : Approx. **12** volts with the ignition SW at **ON** position
11-GROUND : Always continuity

[Q] **: PARTS LOCATION**

Code	See Page	Code	See Page	Code	See Page
C7	34	L4	36	R7	37
H17	36	R6	37	S6	35

[R] **: RELAY BLOCKS**

Code	See Page	Relay Blocks (Relay Block Location)
1	18	R/B No.1 (Instrument Panel Left)

[S] **: JUNCTION BLOCK AND WIRE HARNESS CONNECTOR**

Code	See Page	Junction Block and Wire Harness (Connector Location)
IB	20	Instrument Panel Wire and Instrument Panel J/B (Lower Finish Panel)
3C	22	Instrument Panel Wire and J/B No.3 (Instrument Panel Left Side)

[T] **: CONNECTOR JOINING WIRE HARNESS AND WIRE HARNESS**

Code	See Page	Joining Wire Harness and Wire Harness (Connector Location)
IE1	42	Floor Wire and Instrument Panel Wire (Left Kick Panel)
BV1	50	Luggage Room Wire and Floor Wire (Luggage Compartment Left)

[U] **: GROUND POINTS**

Code	See Page	Ground Points Location
BL	50	Under the Left Quarter Pillar
BO	50	Back Panel Center

[V] **: SPLICE POINTS**

Code	See Page	Wire Harness with Splice Points	Code	See Page	Wire Harness with Splice Points
I5	44	Cowl Wire	B18	50	Luggage Room Wire

[O] : Explains the system outline.

[P] : Indicates values or explains the function for reference during troubleshooting.

[Q] : Indicates the reference page showing the position on the vehicle of the parts in the system circuit.

Example : Part ”L4” (Light Failure Sensor) is on page 36 of the manual.
∗ The letter in the code is from the first letter of the part, and the number indicates its order in parts starting with that letter.

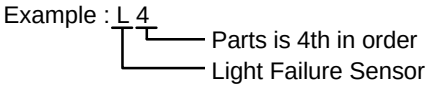

[R] : Indicates the reference page showing the position on the vehicle of Relay Block Connectors in the system circuit.

Example : Connector ”1” is described on page 18 of this manual and is installed on the left side of the instrument panel.

[S] : Indicates the reference page showing the position on the vehicle of J/B and Wire Harness in the system circuit.

Example : Connector ”3C” connects the Instrument Panel Wire and J/B No.3. It is described on page 22 of this manual, and is installed on the instrument panel left side.

[T] : Indicates the reference page describing the wiring harness and wiring harness connector (the female wiring harness is shown first, followed by the male wiring harness).

Example : Connector ”IE1” connects the floor wire (female) and Instrument panel wire (male). It is described on page 42 of this manual, and is installed on the left side kick panel.

[U] : Indicates the reference page showing the position of the ground points on the vehicle.

Example : Ground point ”BO” is described on page 50 of this manual and is installed on the back panel center.

[V] : Indicates the reference page showing the position of the splice points on the vehicle.

Example : Splice point ”I5” is on the Cowl Wire Harness and is described on page 44 of this manual.

B HOW TO USE THIS MANUAL

The ground points circuit diagram shows the connections from all major parts to the respective ground points. When troubleshooting a faulty ground point, checking the system circuits which use a common ground may help you identify the problem ground quickly. The relationship between ground points (EA , IB and IC shown below) can also be checked this way.

I GROUND POINT

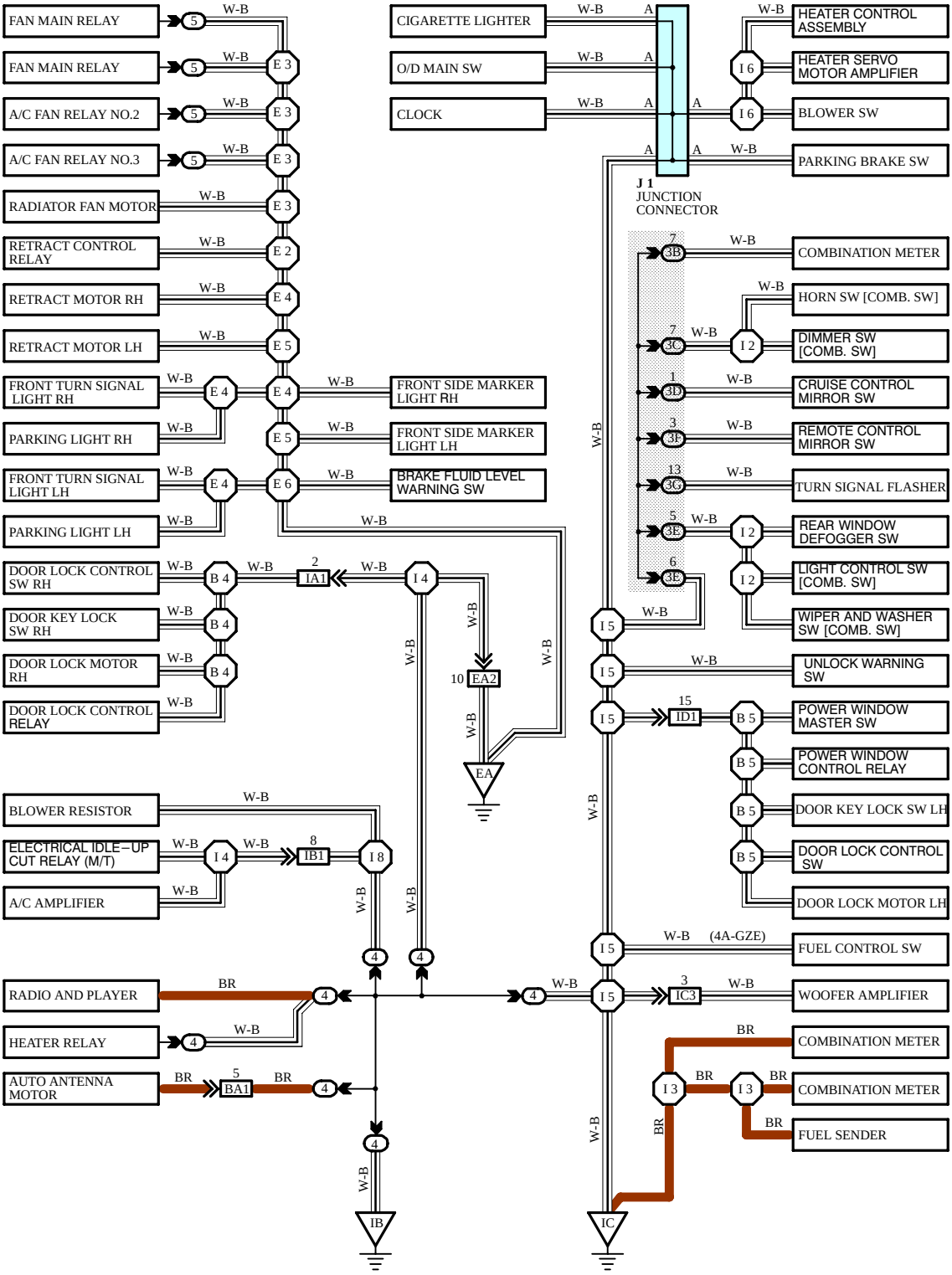

* The system shown here is an EXAMPLE ONLY. It is different to the actual circuit shown in the SYSTEM CIRCUITS SECTION.

The ”Current Flow Chart” section, describes which parts each power source (fuses, fusible links, and circuit breakers) transmits current to. In the Power Source circuit diagram, the conditions when battery power is supplied to each system are explained. Since all System Circuit diagrams start from the power source, the power source system must be fully understood.

J POWER SOURCE (Current Flow Chart)

The chart below shows the route by which current flows from the battery to each electrical source (Fusible Link, Circuit Breaker, Fuse, etc.) and other parts.

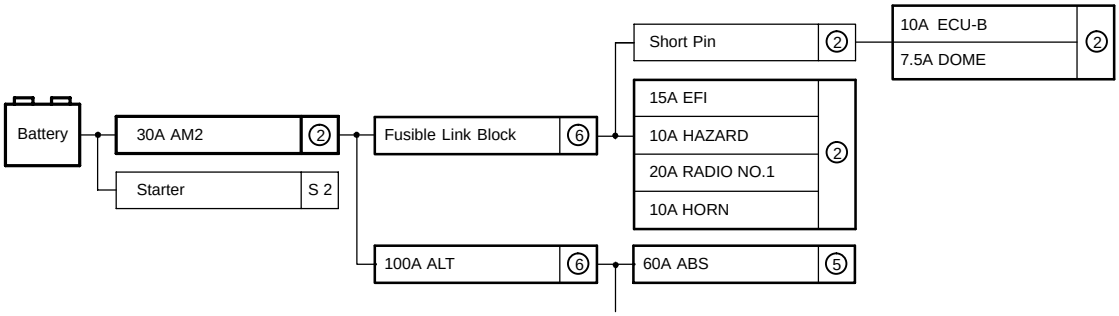

Engine Room R/B (See Page 20)

Fuse		System	Page
20A	STOP	ABS ABS and Traction Control Cruise Control Electronically Controlled Transmission and A/T Indicator Multiplex Communication System	194 187 180 166 210
10A	DOME	Cigarette Lighter and Clock Combination Meter Headlight Interior Light Key Reminder and Seat Belt Warning Light Auto Turn Off	214 230 112 122

POWER SOURCE

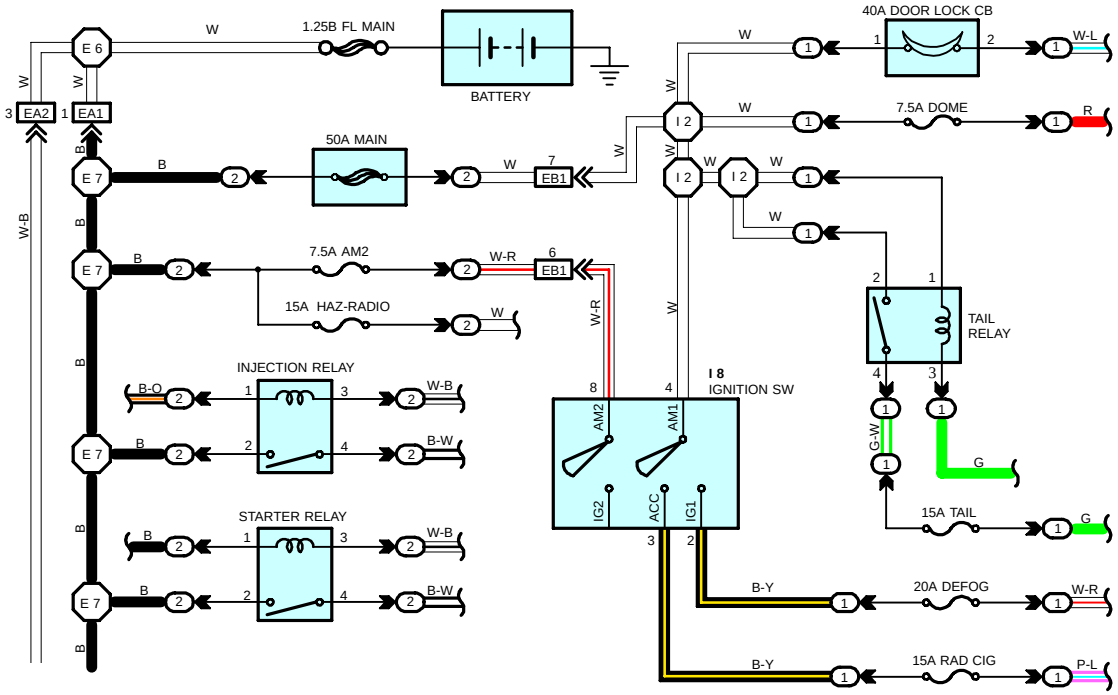

* The system shown here is an EXAMPLE ONLY. It is different to the actual circuit shown in the SYSTEM CIRCUITS SECTION.

K CONNECTOR LIST

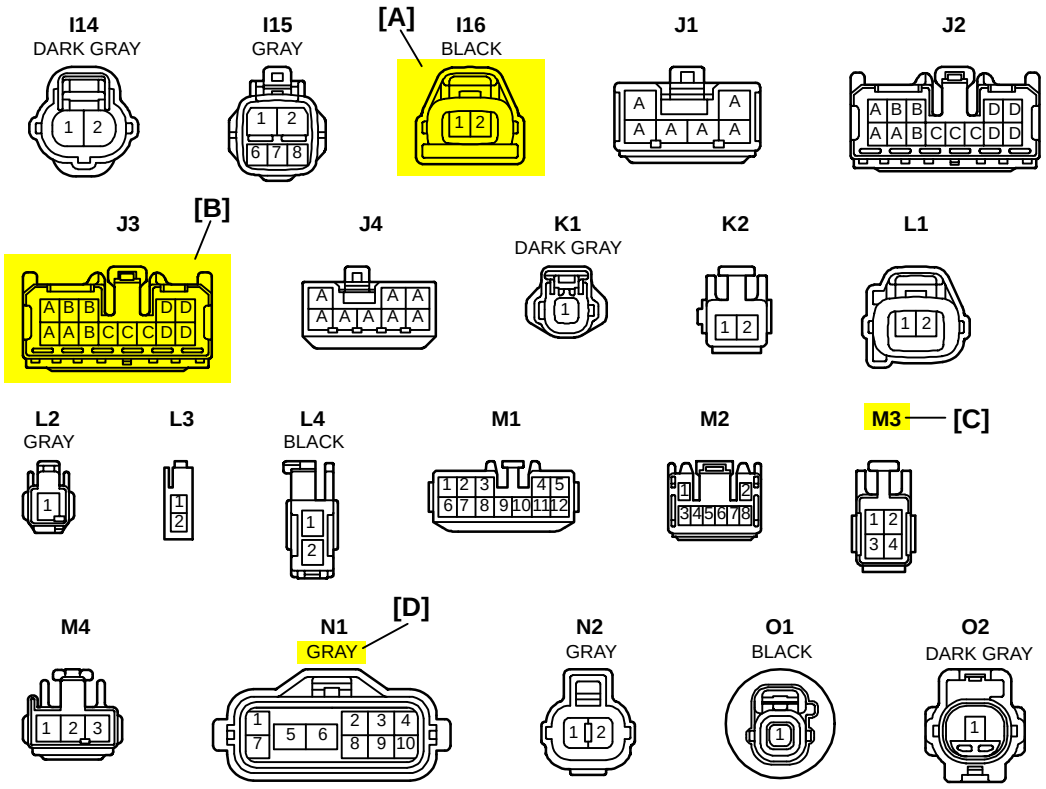

[A] : Indicates connector to be connected to a part. (The numeral indicates the pin No.)

[B] : Junction Connector
Indicates a connector which is connected to a short terminal.

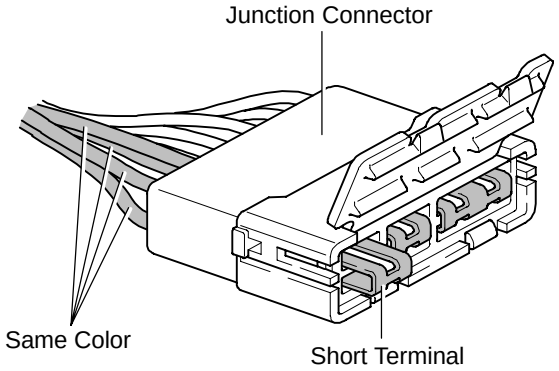

Junction connector in this manual include a short terminal which is connected to a number of wire harnesses. Always perform inspection with the short terminal installed. (When installing the wire harnesses, the harnesses can be connected to any position within the short terminal grouping. Accordingly, in other vehicles, the same position in the short terminal may be connected to a wire harness from a different part.)
Wire harness sharing the same short terminal grouping have the same color.

[C] : Parts Code
The first letter of the code is taken from the first letter of part, and the numbers indicates its order in parts which start with the same letter.

[D] : Connector Color
Connectors not indicated are milky white in color.

L PART NUMBER OF CONNECTORS

Code	Part Name	Part Number
A 1	A/C Ambient Temp. Sensor	90980-11070
A 2	A/C Condenser Fan Motor	90980-11237
A 3	A/C Condenser Fan Relay	90980-10940
A 4	A/C Triple Pressure SW (A/C Dual and Single Pressure SW)	90980-10943
[A]	A/T Oil Temp. Sensor [B]	909 [C] 413
A 6	ABS Actuator	90980-11151
A 7	ABS Actuator	90980-11009
A 8	ABS Speed Sensor Front LH	90980-10941
A 9	ABS Speed Sensor Front RH	90980-11002
A10	Airbag Sensor Front LH	90980-11856
A11	Airbag Sensor Front RH	
A12		90980-11194
		90980-11

Code	Part Name	Part Number
D 4	Diode (Door Courtesy Light)	90980-11608
D 5	Diode (Key Off Operation)	90980-10962
D 6	Diode (Luggage Compartment Light)	90980-11608
D 7	Door Lock Control Relay	90980-10848
D 8	Door Courtesy Light LH	90980-11148
D 9	Door Courtesy Light RH	
D10	Door Courtesy SW LH	90980-11097
D11	Door Courtesy SW RH	
D12	Door Courtesy SW Front LH	90980-11156
D13	Door Courtesy SW Front RH	
D14	Door Courtesy SW Rear LH	
D15	Door Courtesy SW Rear RH	
D16	nd Unlock SW LH	90980-11170
	RH	

[A] : Part Code

[B] : Part Name

[C] : Part Number
Toyota Part Number are indicated.

Not all of the above part numbers of the connector are established for the supply. In case of ordering a connector or terminal with wire, please confirm in advance if there is supply for it using “Parts Catalog News” (published by Parts Engineering Administration Dept.).

FOREWORD

This wiring diagram manual has been prepared to provide information on the electrical system of the 2001 AVALON.

Applicable models: MCX20 Series

For service specifications and repair procedures of the above models other than those listed in this manual, refer to the following manuals;

Manual Name	Pub. No.
▲2001 AVALON Repair Manual	
Volume 1	RM808U1
Volume 2	RM808U2
▲2001 AVALON New Car Features	NCF191U

All information in this manual is based on the latest product information at the time of publication. However, specifications and procedures are subject to change without notice.

TOYOTA MOTOR CORPORATION

NOTICE

When handling supplemental restraint system components (removal, installation or inspection, etc.), always follow the direction given in the repair manuals listed above to prevent accidents and supplemental restraint system malfunction.

A INTRODUCTION

This manual consists of the following 13 sections:

No.	Section	Description
A	INDEX	Index of the contents of this manual.
	INTRODUCTION	Brief explanation of each section.
B	HOW TO USE THIS MANUAL	Instructions on how to use this manual.
C	TROUBLE-SHOOTING	Describes the basic inspection procedures for electrical circuits.
D	ABBREVIATIONS	Defines the abbreviations used in this manual.
E	GLOSSARY OF TERMS AND SYMBOLS	Defines the symbols and functions of major parts.
F	RELAY LOCATIONS	Shows position of the Electronic Control Unit, Relays, Relay Block, etc. This section is closely related to the system circuit.
G	ELECTRICAL WIRING ROUTING	Describes position of Parts Connectors, Splice points, Ground points, etc. This section is closely related to the system circuit.
H	INDEX	Index of the system circuits.
	SYSTEM CIRCUITS	Electrical circuits of each system are shown from the power supply through ground points. Wiring connections and their positions are shown and classified by code according to the connection method. (Refer to the section, ”How to use this manual”). The ”System Outline” and ”Service Hints” useful for troubleshooting are also contained in this section.
I	GROUND POINT	Shows ground positions of all parts described in this manual.
J	POWER SOURCE (Current Flow Chart)	Describes power distribution from the power supply to various electrical loads.
K	CONNECTOR LIST	Describes the form of the connectors for the parts appeared in this book. This section is closely related to the system circuit.
L	PART NUMBER OF CONNECTORS	Indicates the part number of the connectors used in this manual.
M	OVERALL ELECTRICAL WIRING DIAGRAM	Provides circuit diagrams showing the circuit connections.

1 AVALON ELECTRICAL WIRING DIAGRAM

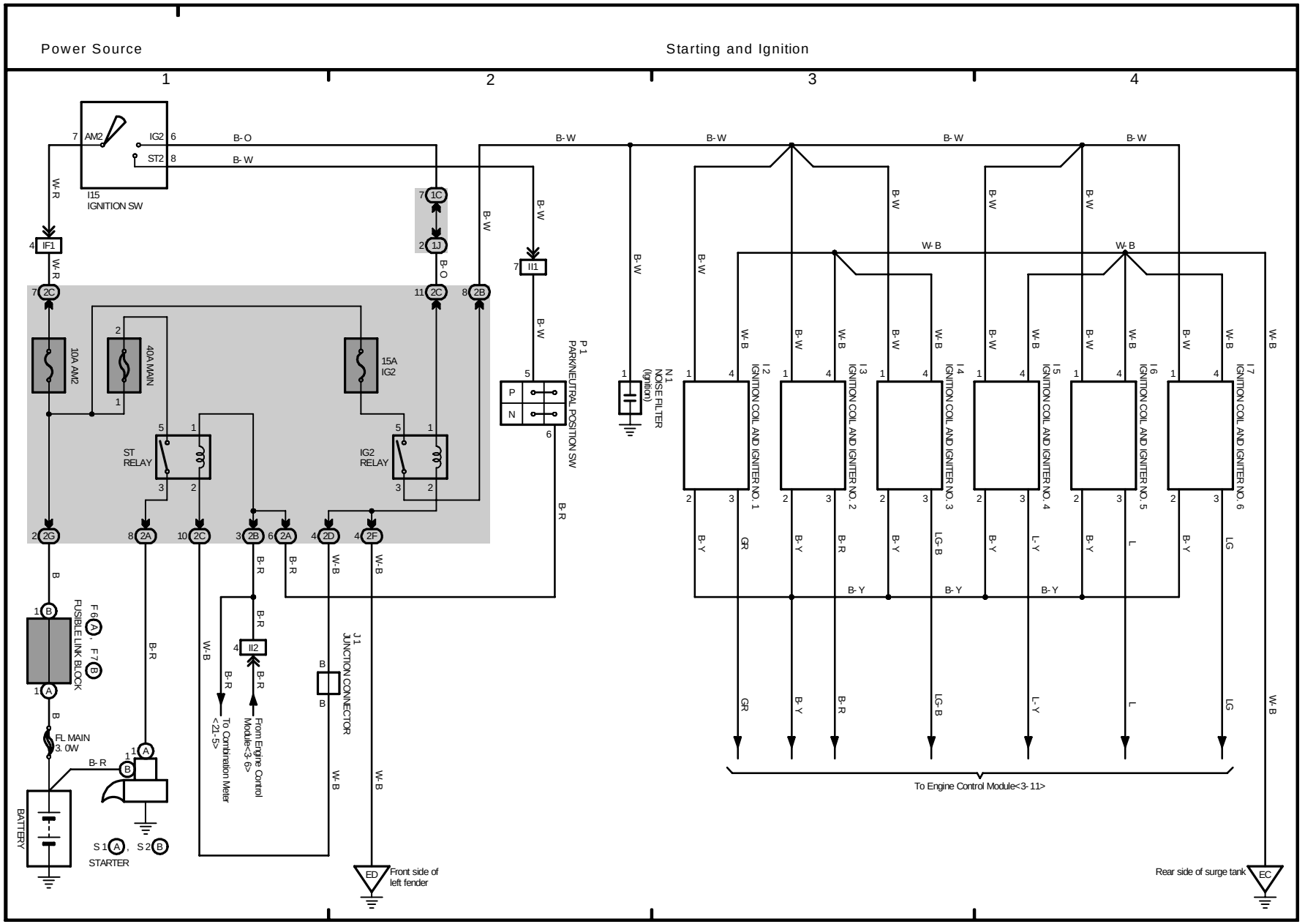

M OVERALL ELECTRICAL WIRING DIAGRAM

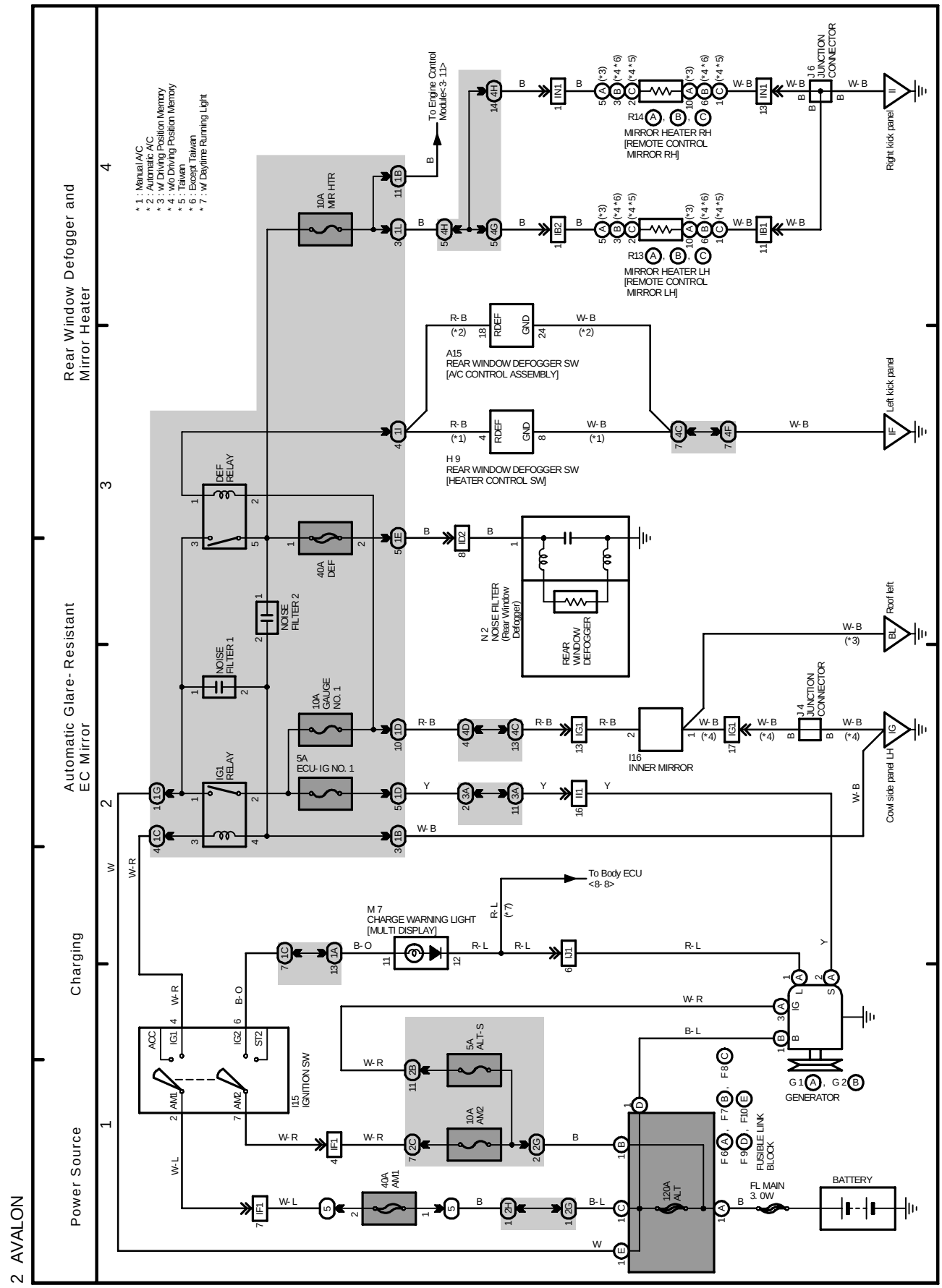

M OVERALL ELECTRICAL WIRING DIAGRAM

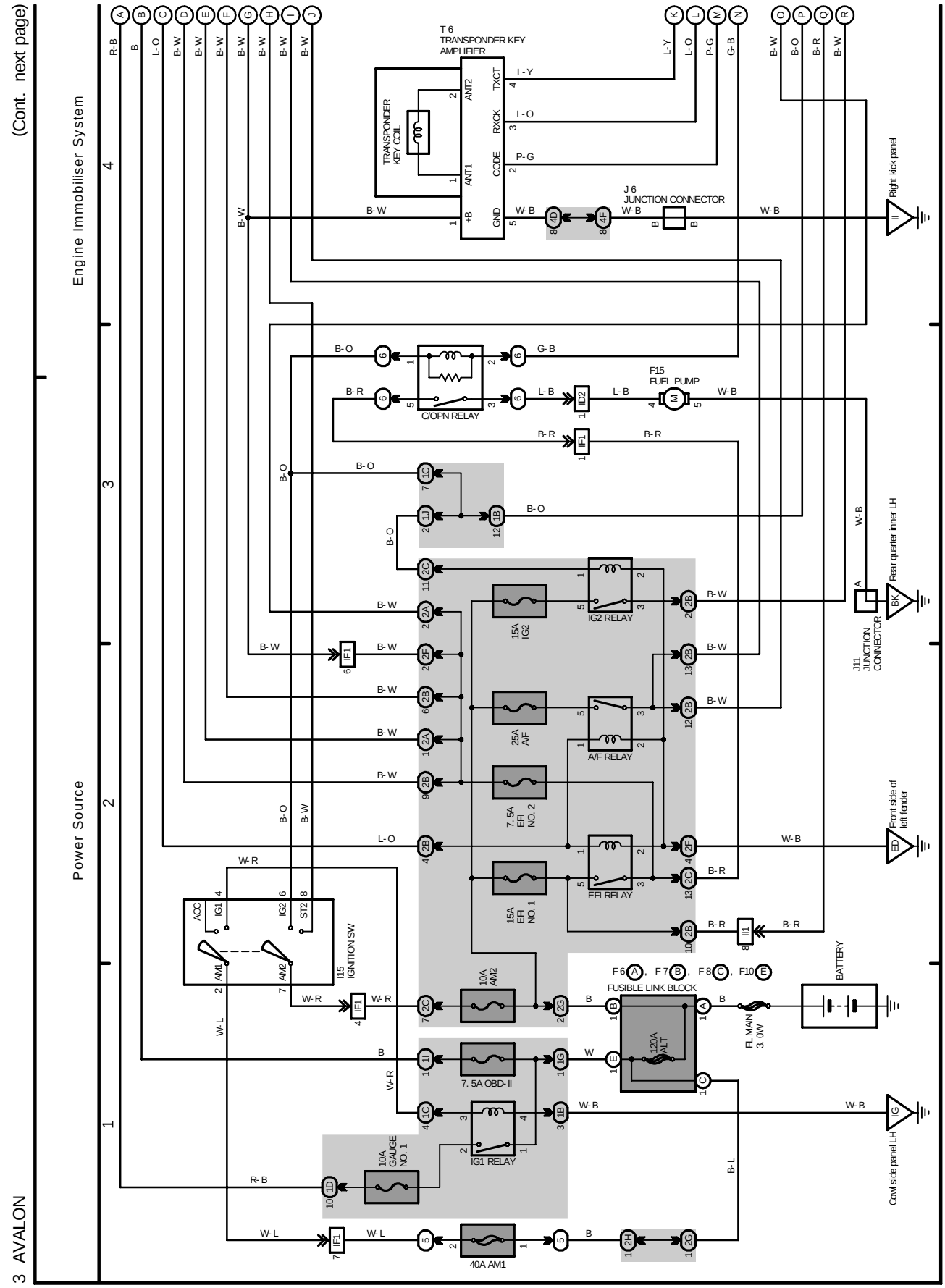

(Cont. next page)

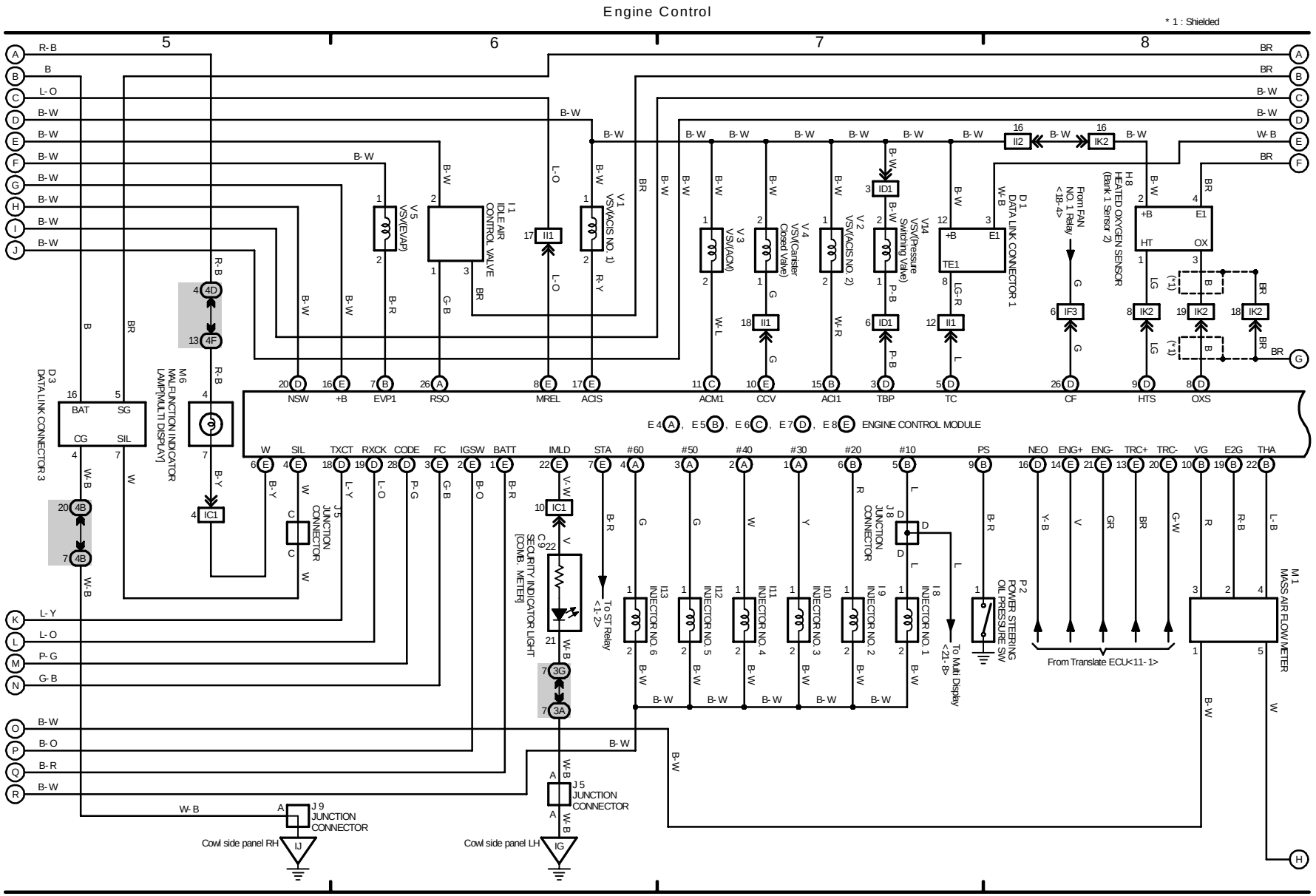

M OVERALL ELECTRICAL WIRING DIAGRAM

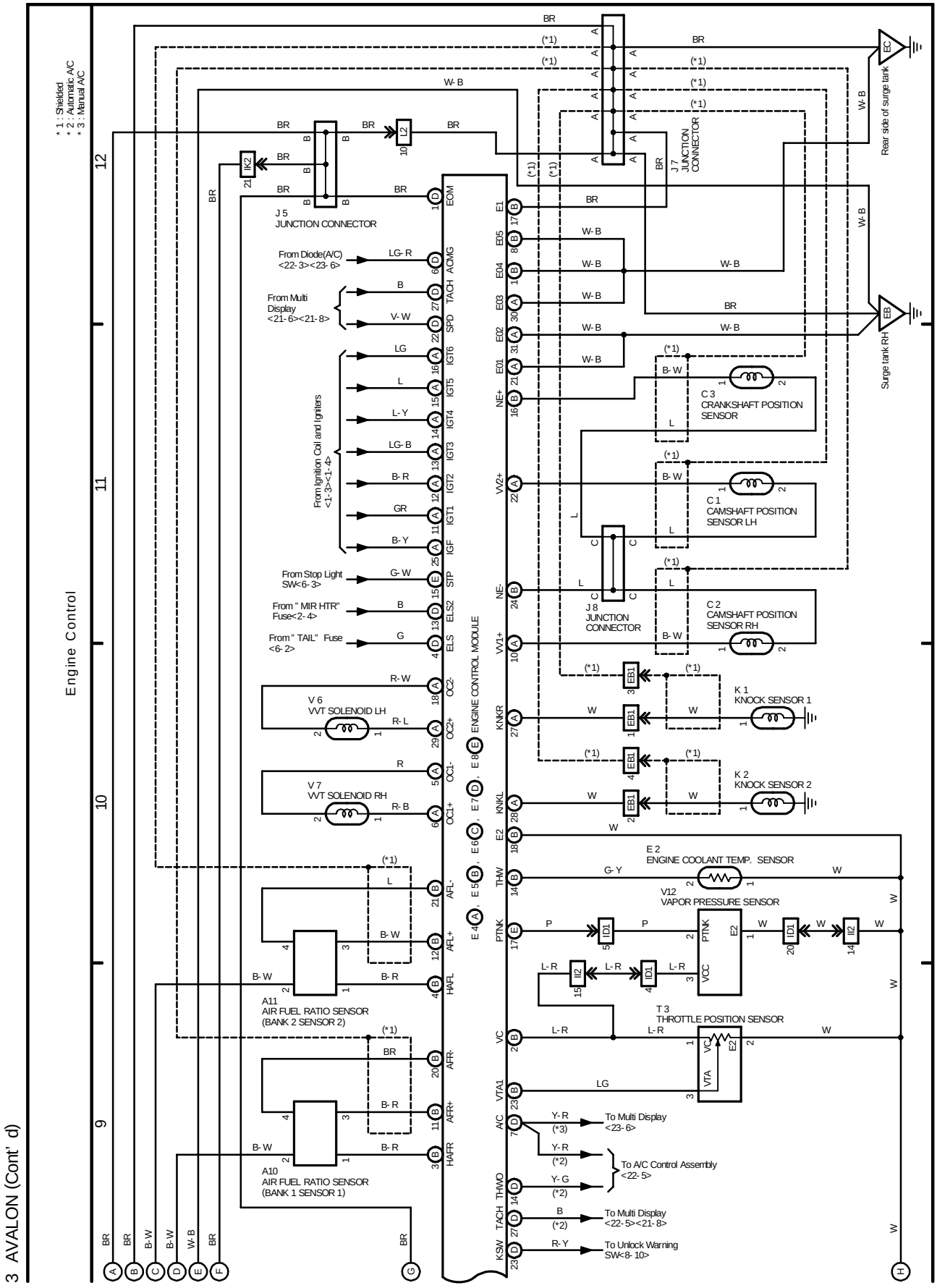

M OVERALL ELECTRICAL WIRING DIAGRAM

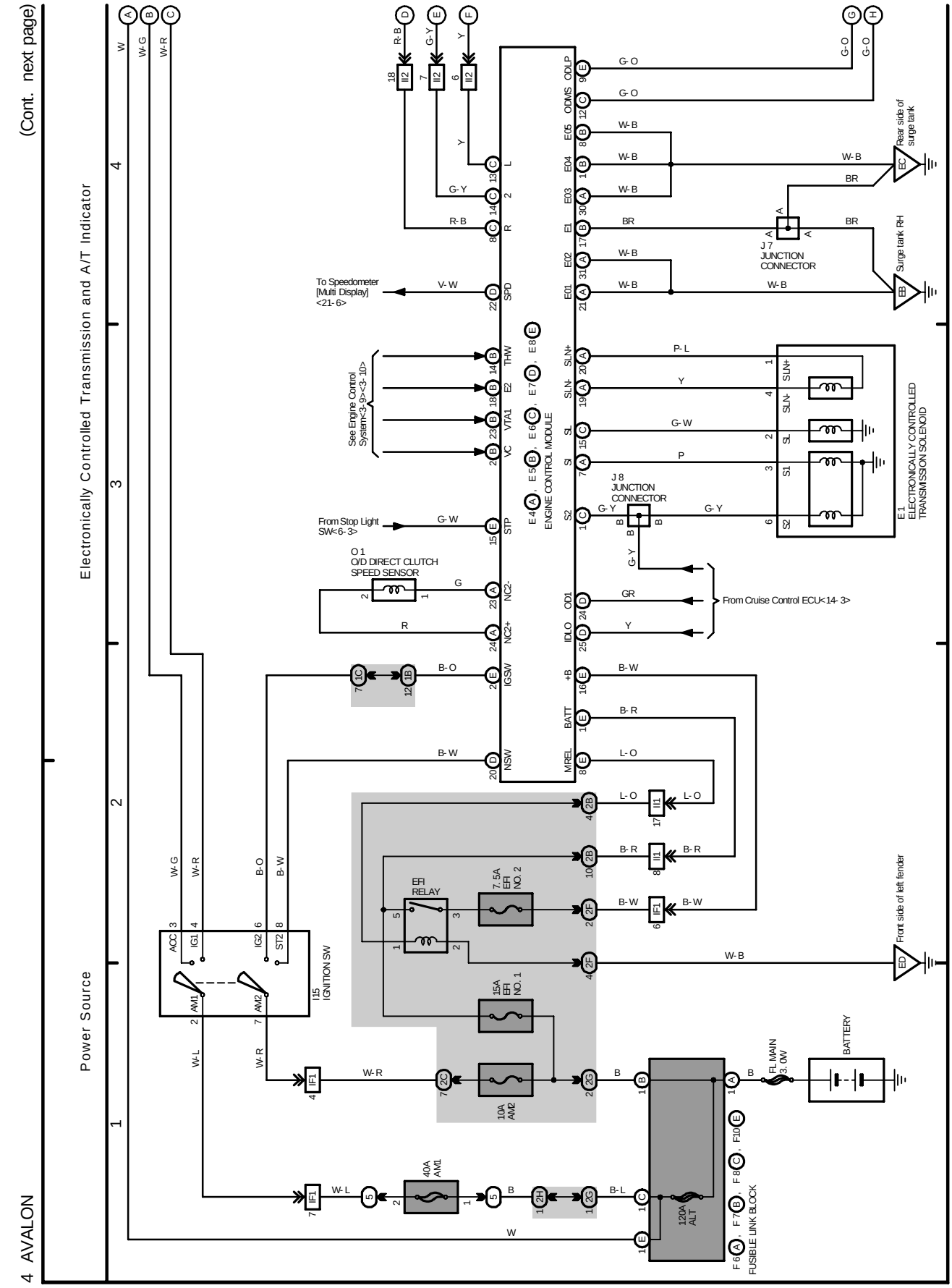

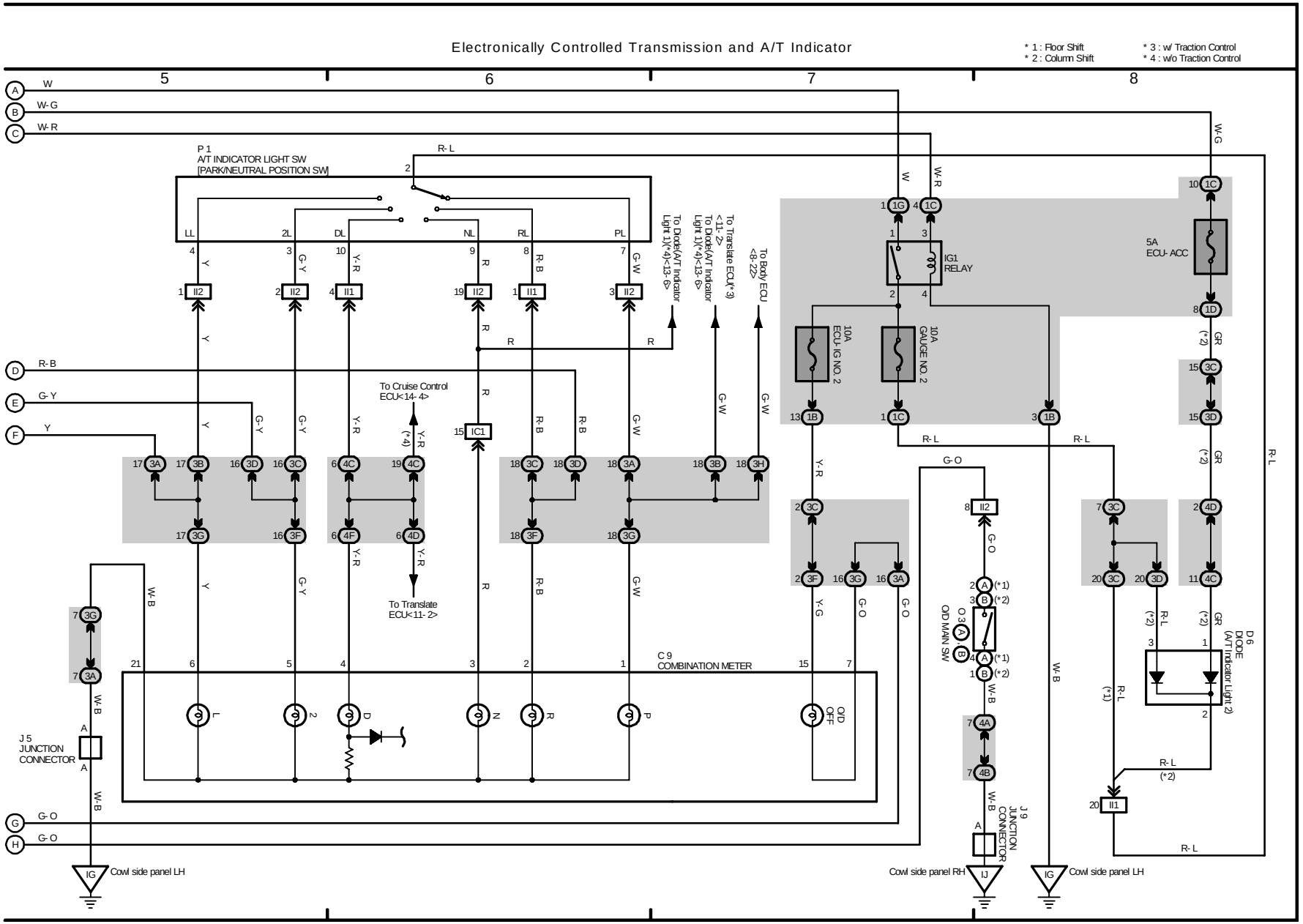
Electronically Controlled Transmission and A/T Indicator
* 1 : Floor Shift
* 2 : Column Shift
* 3 : w/ Traction Control
* 4 : w/o Traction Control
P 1
A/T INDICATOR LIGHT SW
[PARK/NEUTRAL POSITION SW]
LL
2L
DL
NL
RL
PL
IG1 RELAY
5A
ECU- ACC
10A
ECU- IG NO. 2
10A
GAUGE NO. 2
To Diode(A/T Indicator Light 1)(*4)<13- 6>
To Translate ECU(*3) <11- 2>
To Diode(A/T Indicator Light 1)(*4)<13- 6>
To Body ECU <8- 22>
To Cruise Control ECU<14- 4>
To Translate ECU<11- 2>
C 9
COMBINATION METER
O/D OFF
O/D MAIN SW
D 6
DIODE
(A/T Indicator Light 2)
J 5
JUNCTION CONNECTOR
J 9
JUNCTION CONNECTOR
Cowl side panel LH
Cowl side panel RH
Cowl side panel LH

M OVERALL ELECTRICAL WIRING DIAGRAM

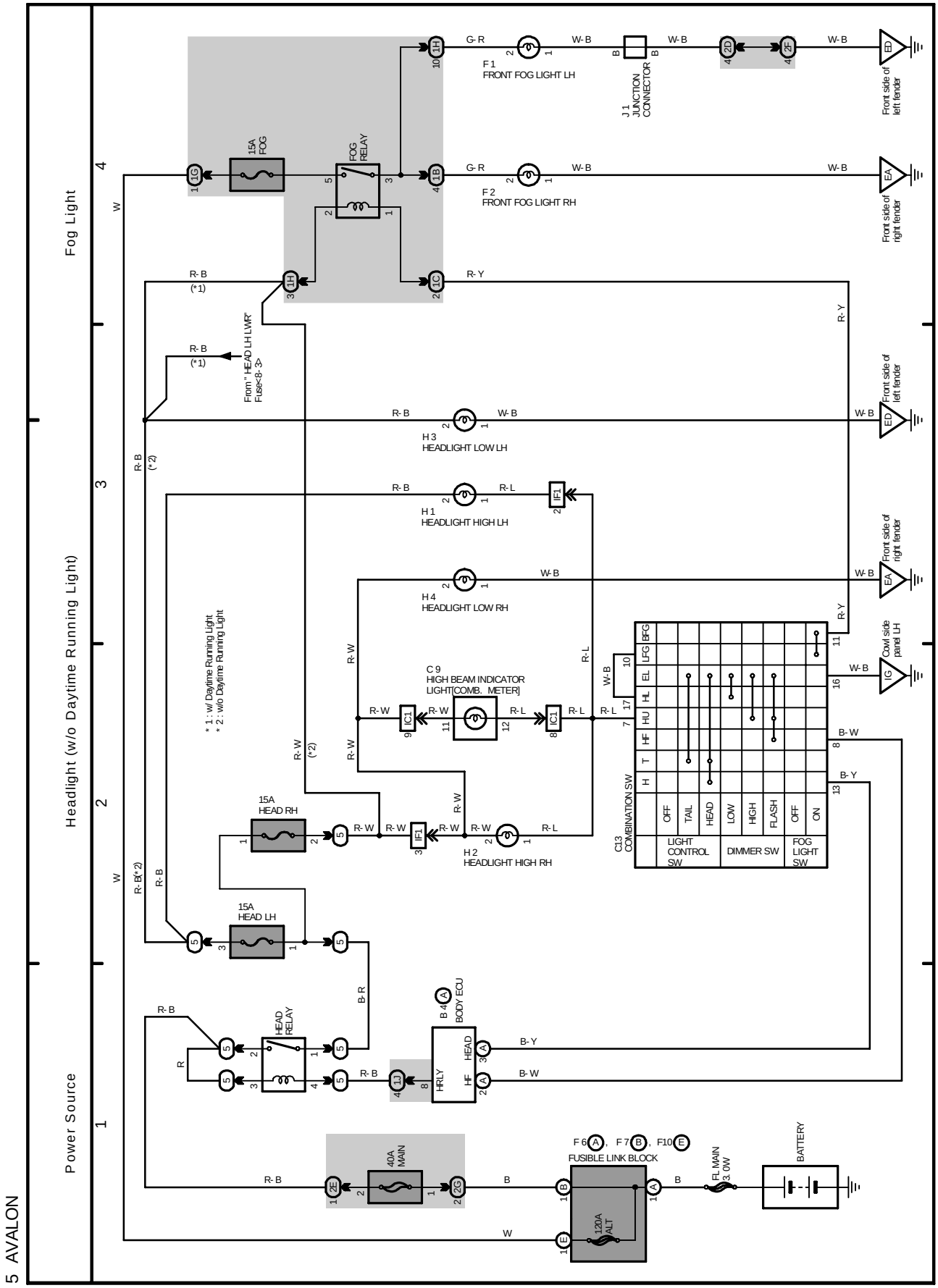

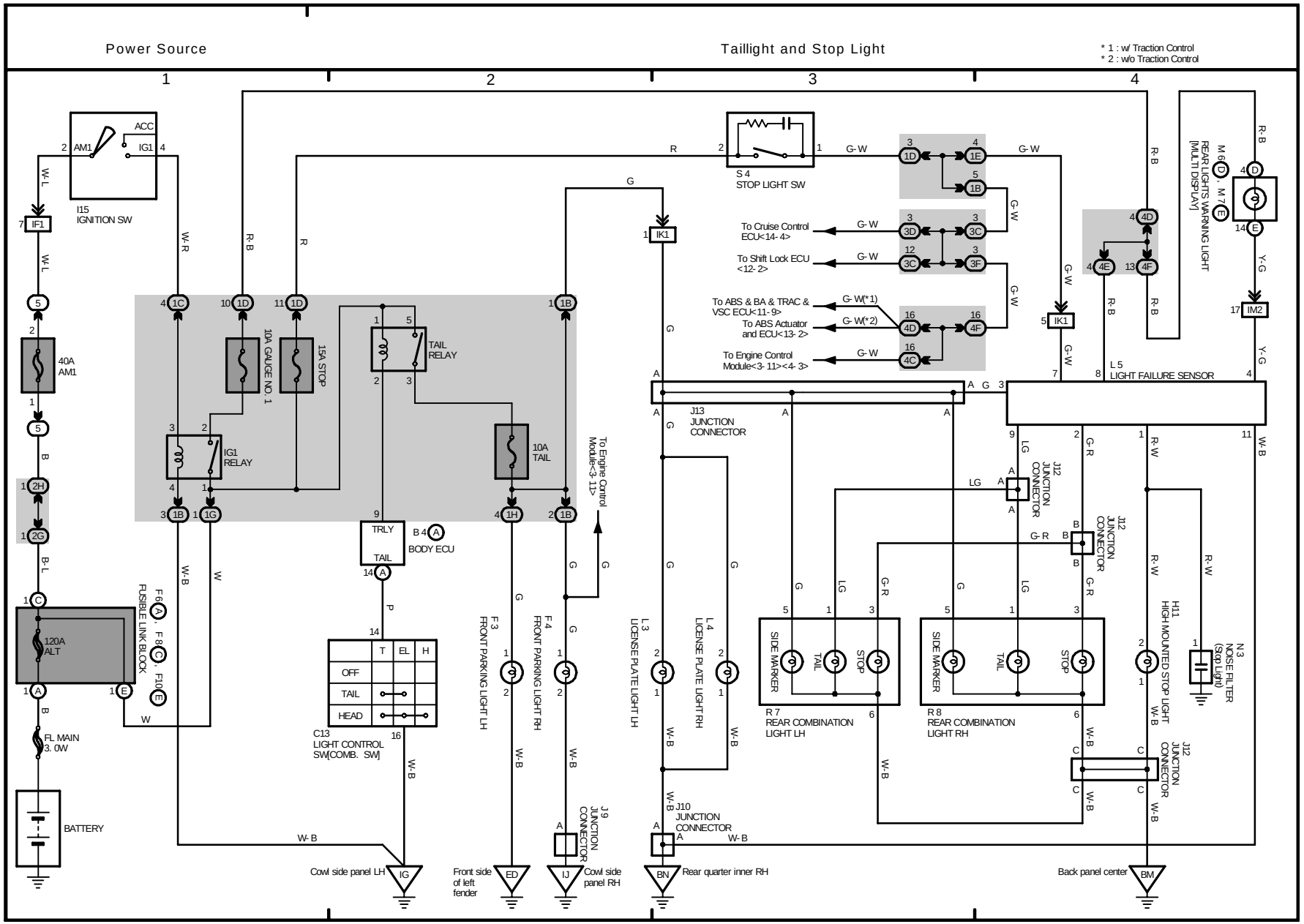
Power Source
Taillight and Stop Light
* 1 : w/ Traction Control
* 2 : w/o Traction Control
1
2
3
4
I15 IGNITION SW
ACC
AM1
IG1
S 4 STOP LIGHT SW
To Cruise Control ECU<14- 4>
To Shift Lock ECU <12- 2>
To ABS & BA & TRAC & VSC ECU<11- 9>
To ABS Actuator and ECU<13- 2>
To Engine Control Module<3- 11><4- 3>
40A AM1
10A GAUGE NO. 1
15A STOP
IG1 RELAY
TAIL RELAY
10A TAIL
To Engine Control Module<3- 11>
TRLY
TAIL
B 4 BODY ECU
120A ALT
FUSIBLE LINK BLOCK
FL MAIN 3. 0W
BATTERY
C13 LIGHT CONTROL SW[COMB. SW]
OFF
TAIL
HEAD
T
EL
H
F 3 FRONT PARKING LIGHT LH
F 4 FRONT PARKING LIGHT RH
L 3 LICENSE PLATE LIGHT LH
L 4 LICENSE PLATE LIGHT RH
J13 JUNCTION CONNECTOR
J12 JUNCTION CONNECTOR
J9 JUNCTION CONNECTOR
J10 JUNCTION CONNECTOR
R 7 REAR COMBINATION LIGHT LH
R 8 REAR COMBINATION LIGHT RH
SIDE MARKER
TAIL
STOP
H11 HIGH MOUNTED STOP LIGHT
N 3 NOISE FILTER (Stop Light)
L 5 LIGHT FAILURE SENSOR
M 6 , M 7 REAR LIGHTS WARNING LIGHT [MULTI DISPLAY]
Cowl side panel LH
Front side of left fender
Cowl side panel RH
Rear quarter inner RH
Back panel center

M OVERALL ELECTRICAL WIRING DIAGRAM

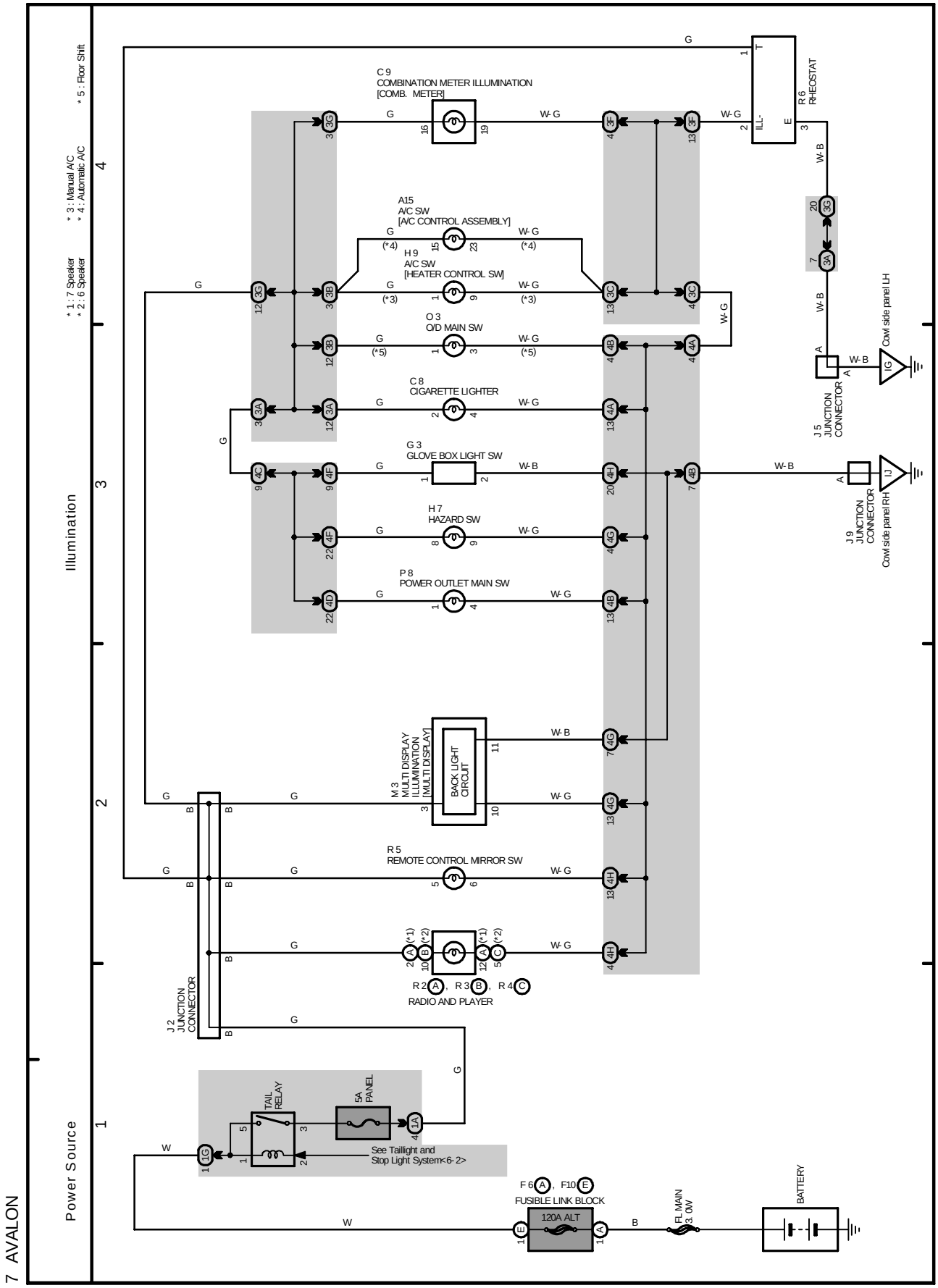

M OVERALL ELECTRICAL WIRING DIAGRAM

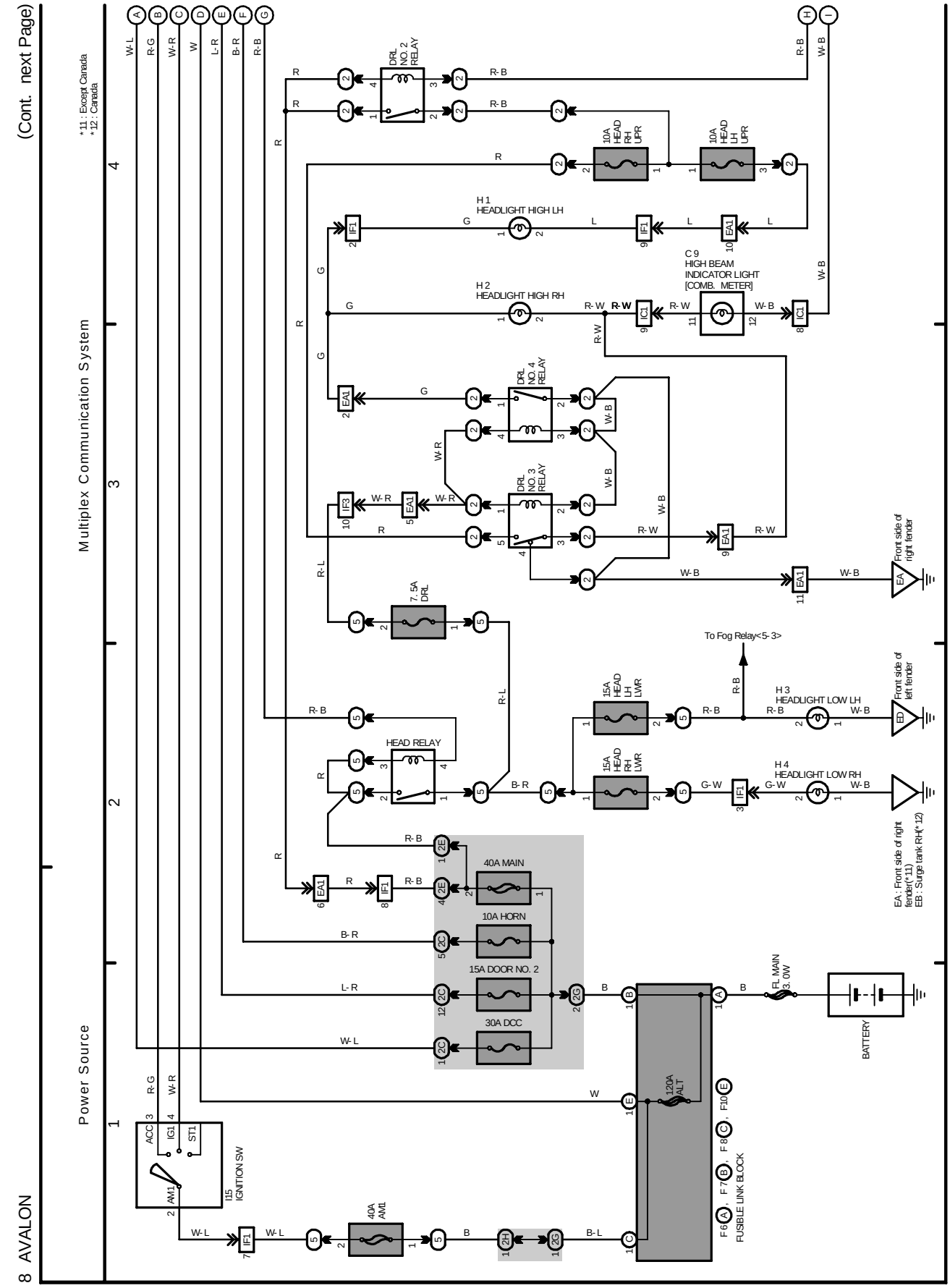

(Cont. next Page)

Multiplex Communication System

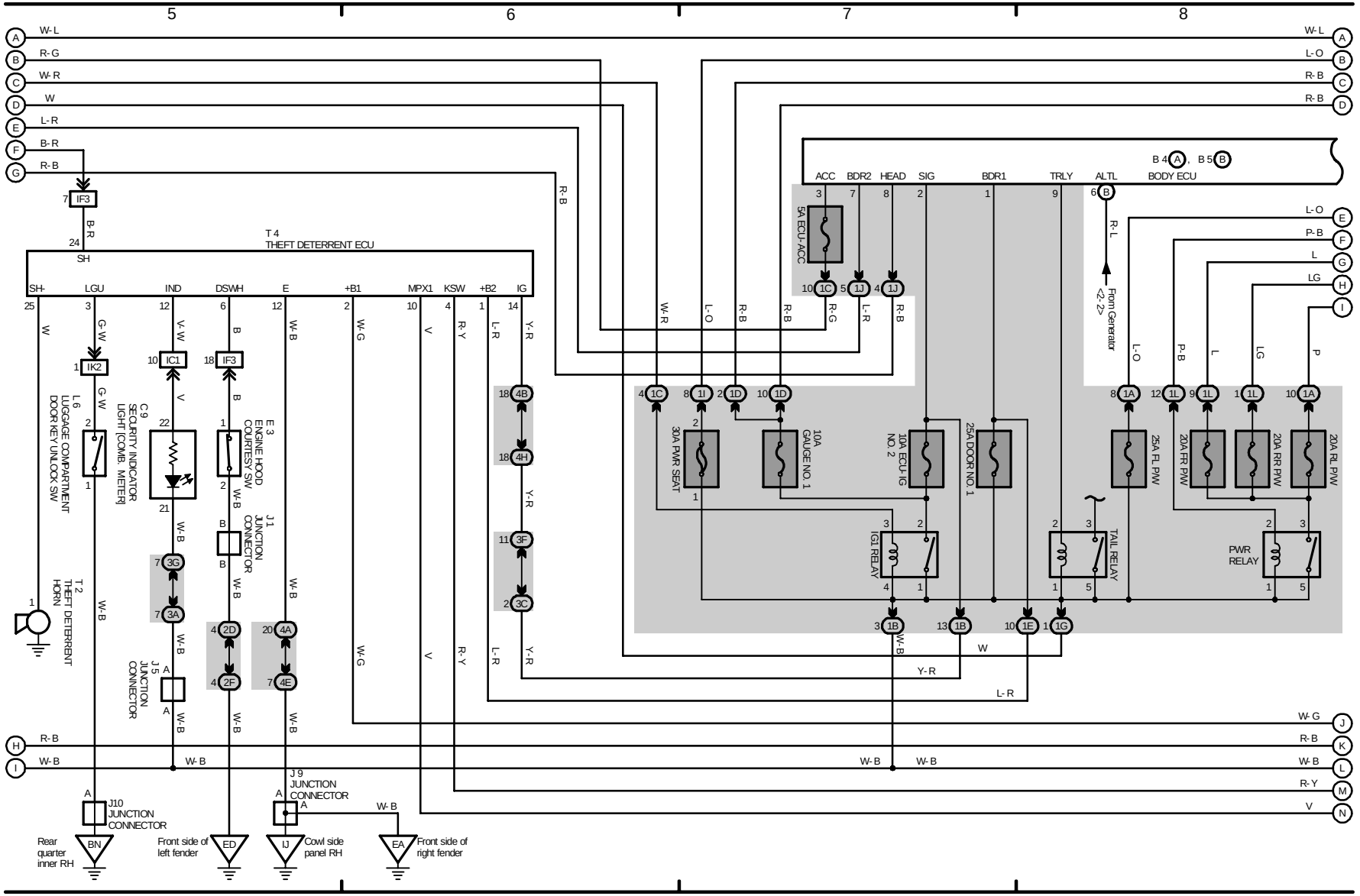

M OVERALL ELECTRICAL WIRING DIAGRAM

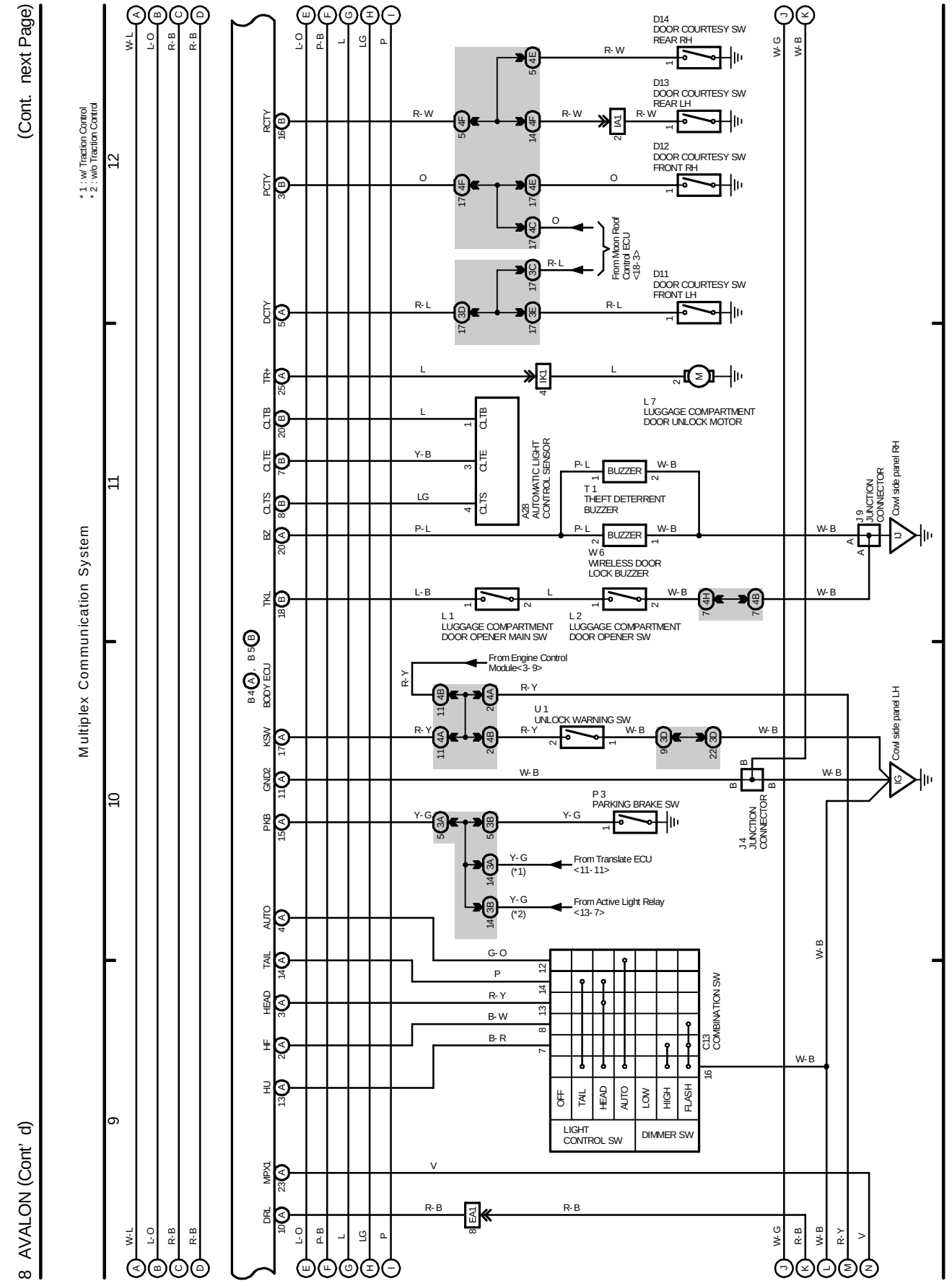

(Cont. next page)

Multiplex Communication System

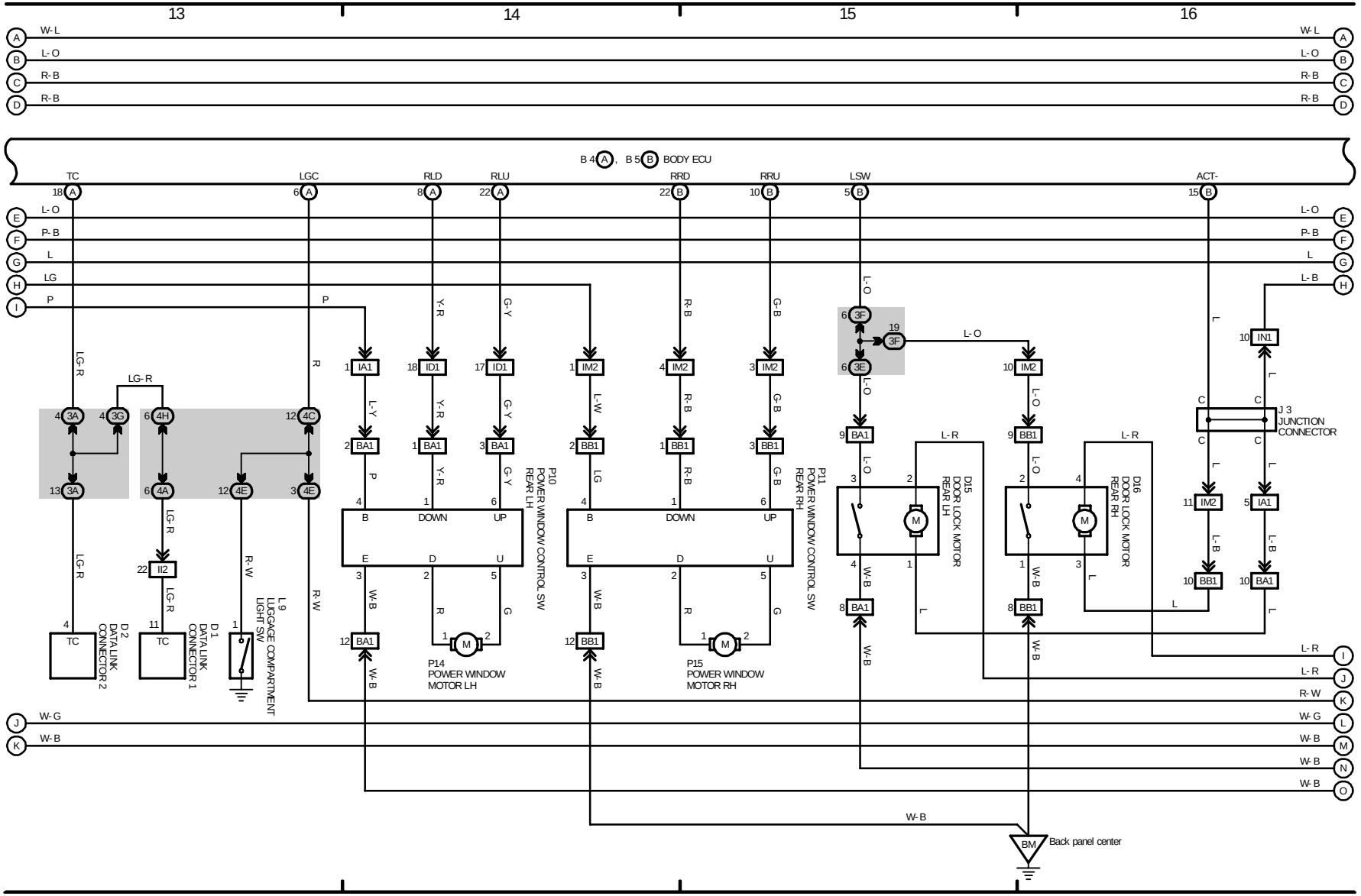

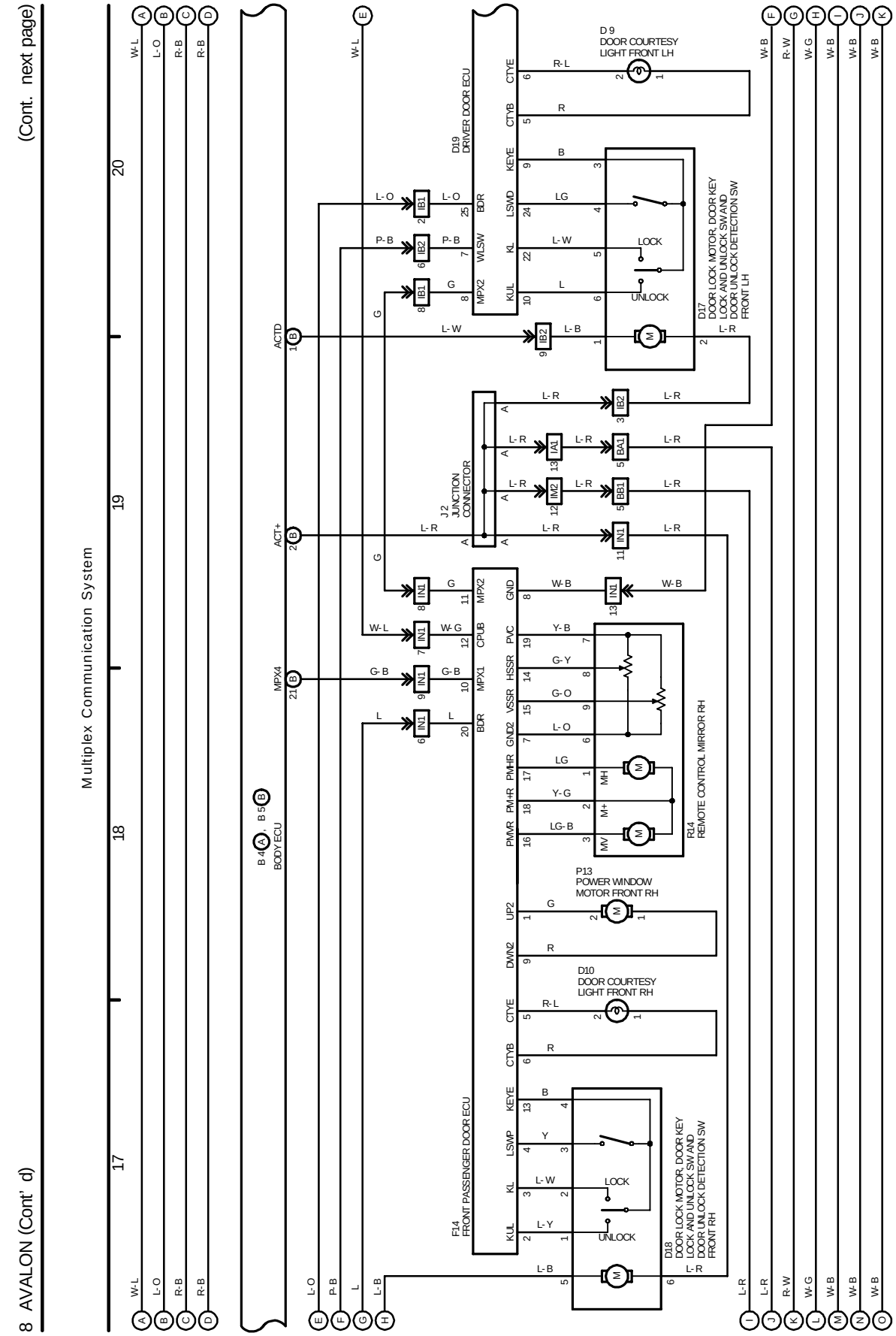
8 AVALON (Cont' d)
(Cont. next page)
Multiplex Communication System
17
18
19
20
BODY ECU
J2 JUNCTION CONNECTOR
D19 DRIVER DOOR ECU
F14 FRONT PASSENGER DOOR ECU
D 9 DOOR COURTESY LIGHT FRONT LH
D17 DOOR LOCK MOTOR, DOOR KEY LOCK AND UNLOCK SW AND DOOR UNLOCK DETECTION SW FRONT LH
D10 DOOR COURTESY LIGHT FRONT RH
D18 DOOR LOCK MOTOR, DOOR KEY LOCK AND UNLOCK SW AND DOOR UNLOCK DETECTION SW FRONT RH
P13 POWER WINDOW MOTOR FRONT RH
R14 REMOTE CONTROL MIRROR RH
LOCK
UNLOCK

(Cont. next page)

Multiplex Communication System

* 3 : Taiwan

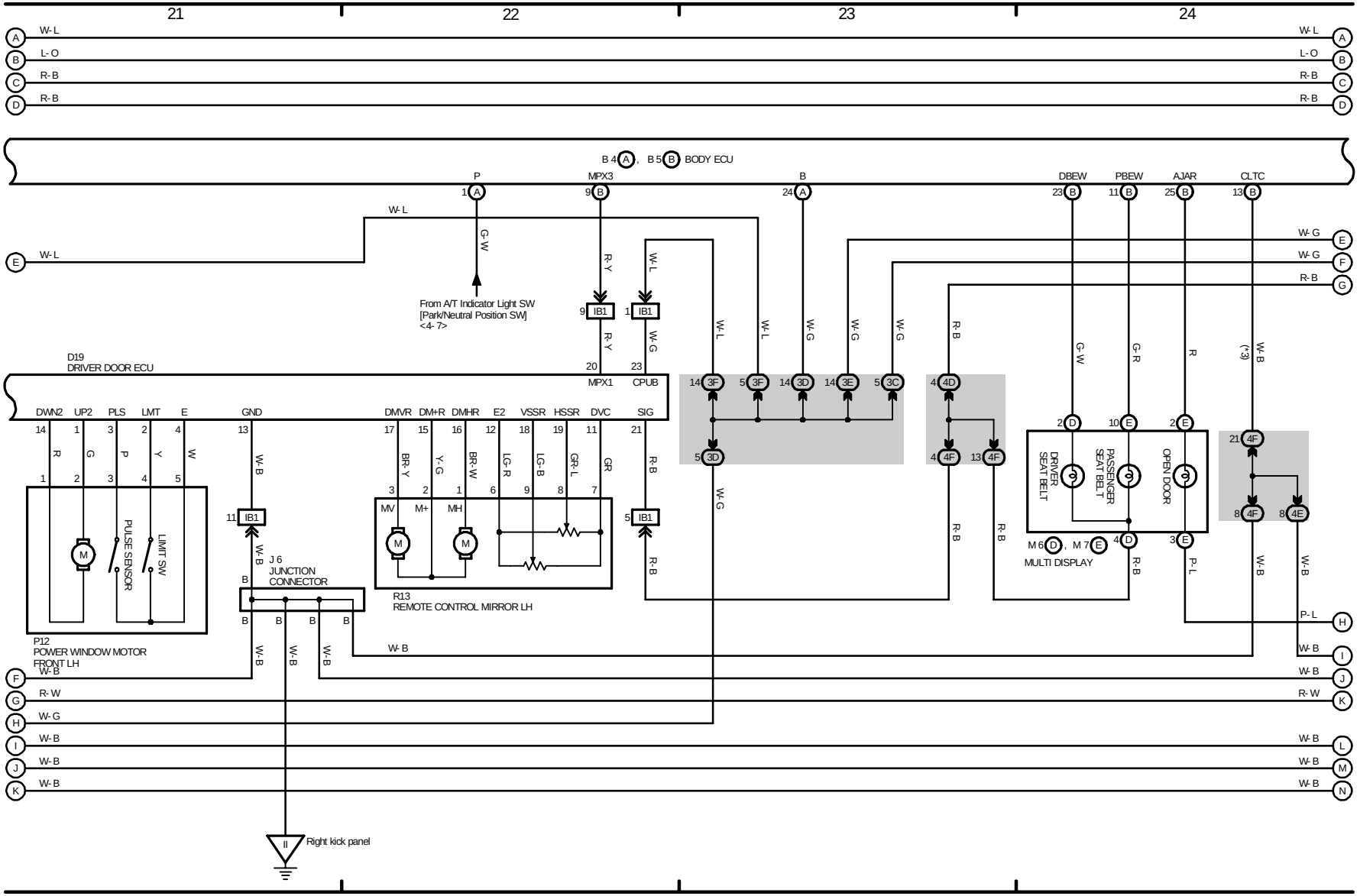

M OVERALL ELECTRICAL WIRING DIAGRAM

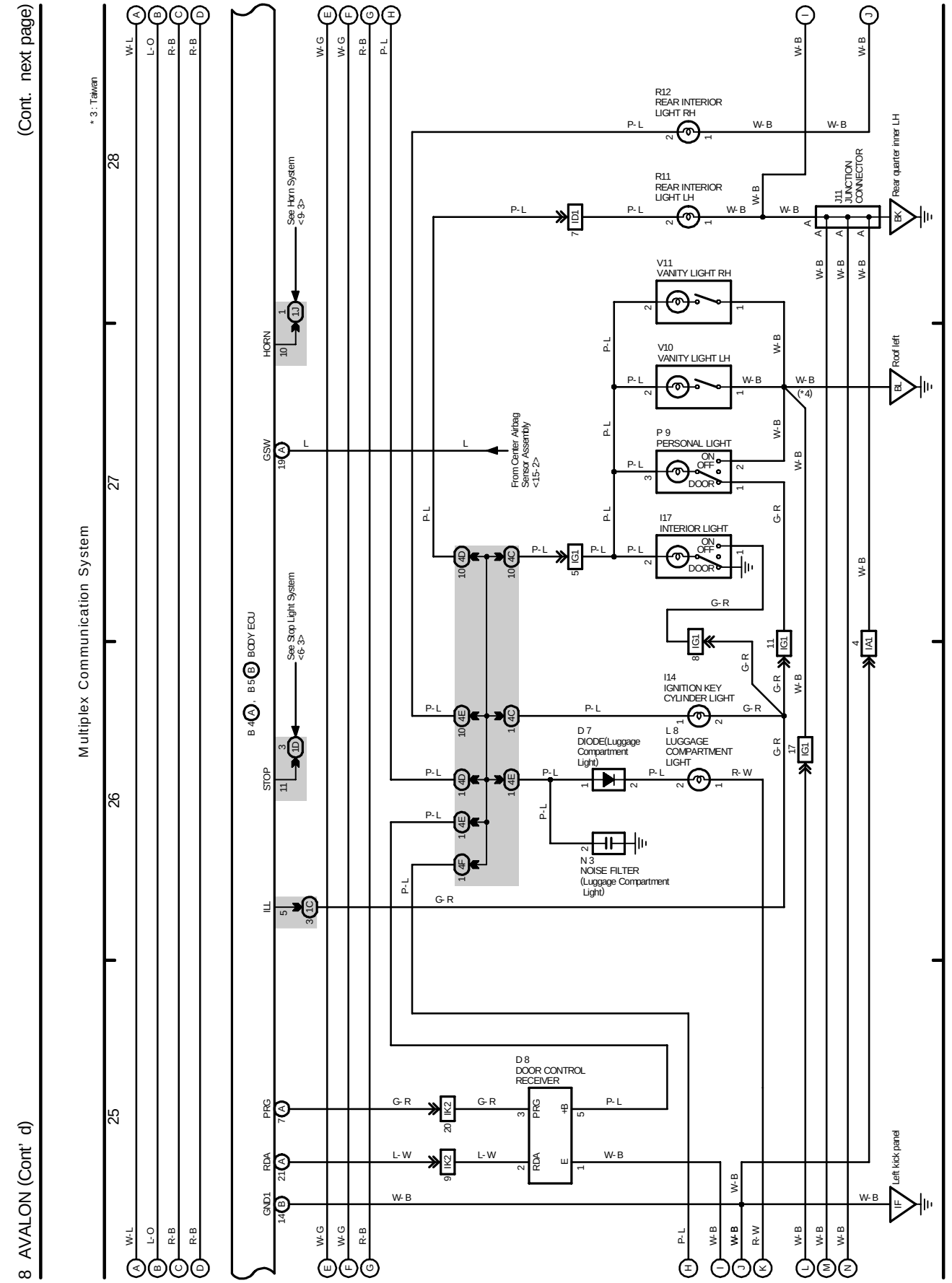

(Cont. next page)

Multiplex Communication System

* 4 : w/ Moon Roof
* 5 : w/o Moon Roof
* 6 : w/o Power Seat
* 7 : w/ Driving Position Memory
* 8 : w/o Driving Position Memory
* 9 : Floor Shift w/ Driving Position Memory
*10 : Column Shift w/ Driving Position Memory

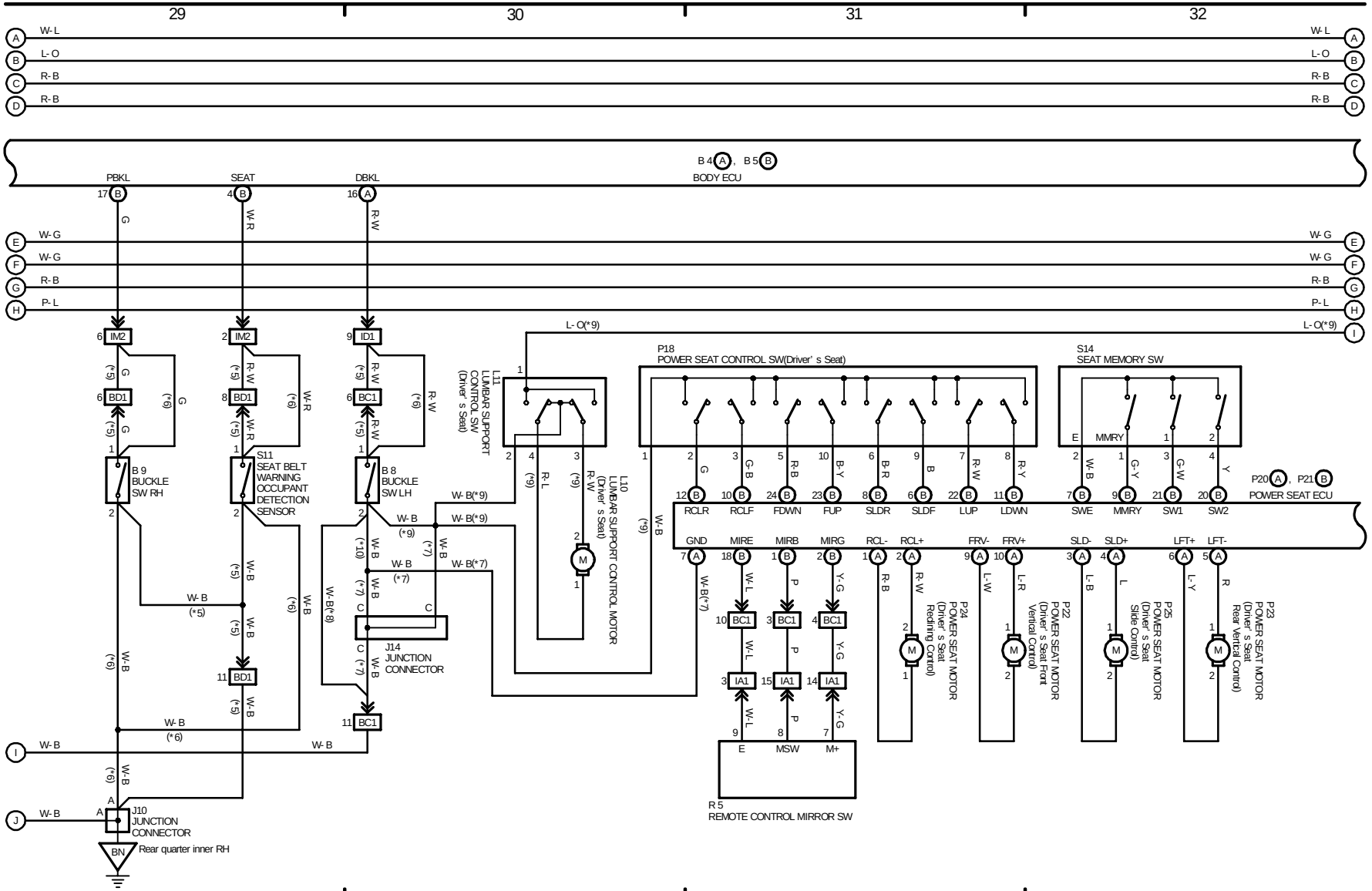

M OVERALL ELECTRICAL WIRING DIAGRAM

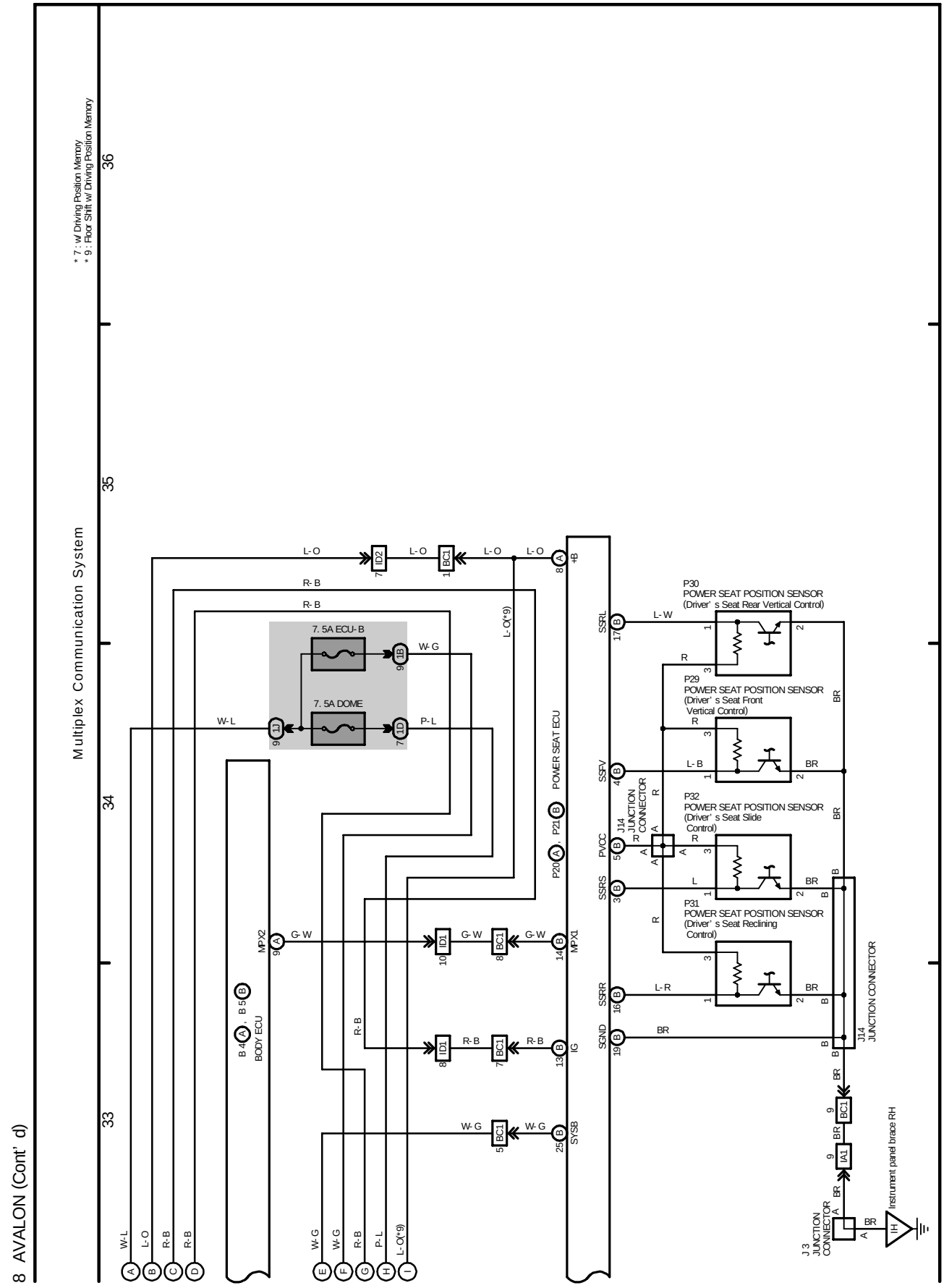

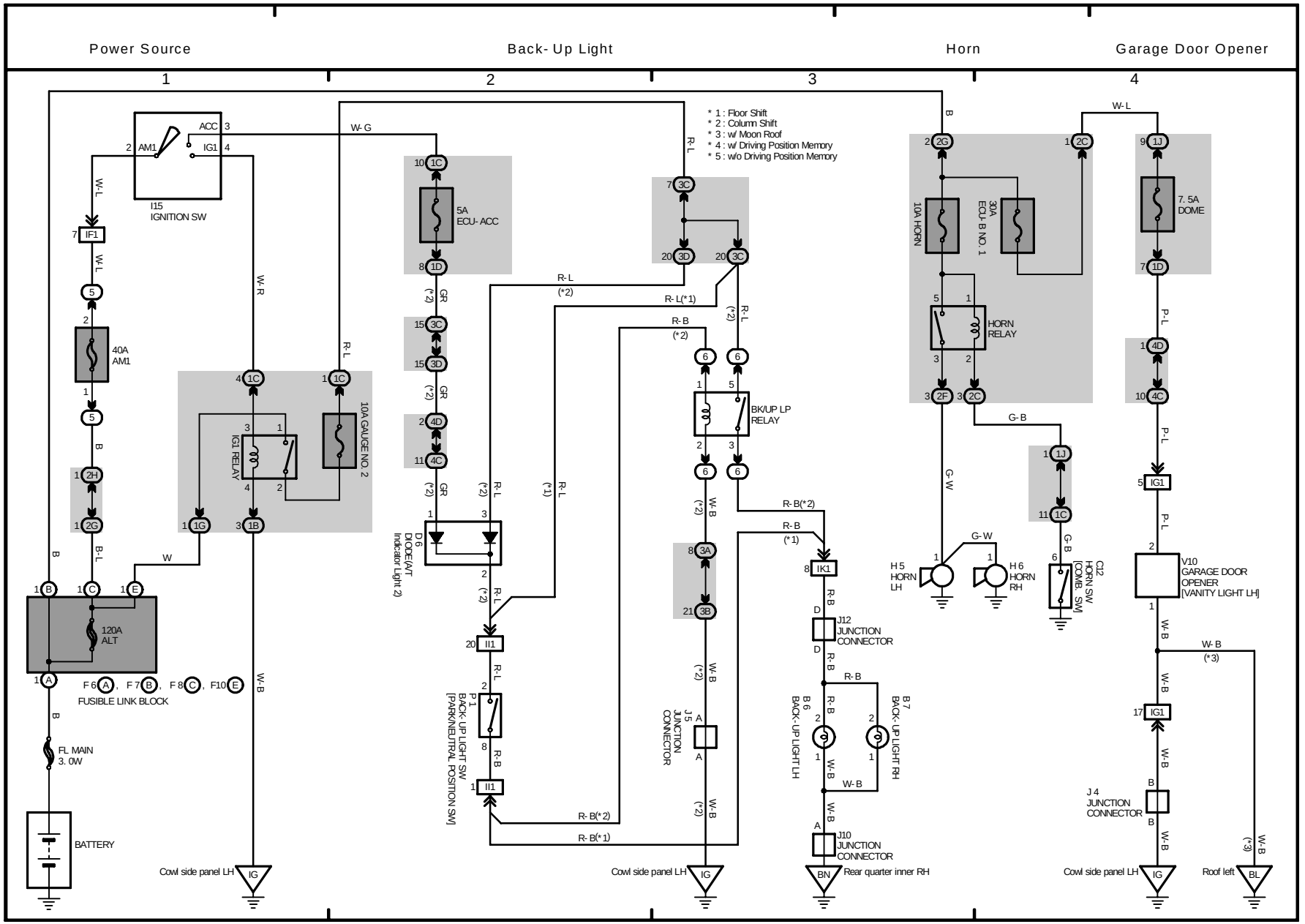
Power Source
Back- Up Light
Horn
Garage Door Opener
1
2
3
4
* 1 : Floor Shift
* 2 : Column Shift
* 3 : w/ Moon Roof
* 4 : w/ Driving Position Memory
* 5 : w/o Driving Position Memory
I15
IGNITION SW
ACC
AM1
IG1
40A
AM1
IF1
5A
ECU- ACC
10A GAUGE NO. 2
IG1 RELAY
120A
ALT
FUSIBLE LINK BLOCK
F6 A , F7 B , F8 C , F10 E
FL MAIN
3. 0W
BATTERY
Cowl side panel LH
IG
D6
DIODE(A/T
Indicator Light 2)
P1
BACK- UP LIGHT SW
[PARK/NEUTRAL POSITION SW]
BK/UP LP
RELAY
J5
JUNCTION
CONNECTOR
B6
BACK- UP LIGHT LH
B7
BACK- UP LIGHT RH
J12
JUNCTION
CONNECTOR
J10
JUNCTION
CONNECTOR
BN
Rear quarter inner RH
10A HORN
30A
ECU- B NO. 1
HORN
RELAY
H5
HORN
LH
H6
HORN
RH
C12
HORN SW
[COMB. SW]
7. 5A
DOME
V10
GARAGE DOOR
OPENER
[VANITY LIGHT LH]
J4
JUNCTION
CONNECTOR
Roof left
BL
W- G
W- L
W- R
R- L
R- L(*1)
R- L(*2)
R- B
R- B(*1)
R- B(*2)
W- B
W- B
(*3)
G- B
G- W
P- L
GR
B
B- L
W
(*1)
(*2)
(*3)

M OVERALL ELECTRICAL WIRING DIAGRAM

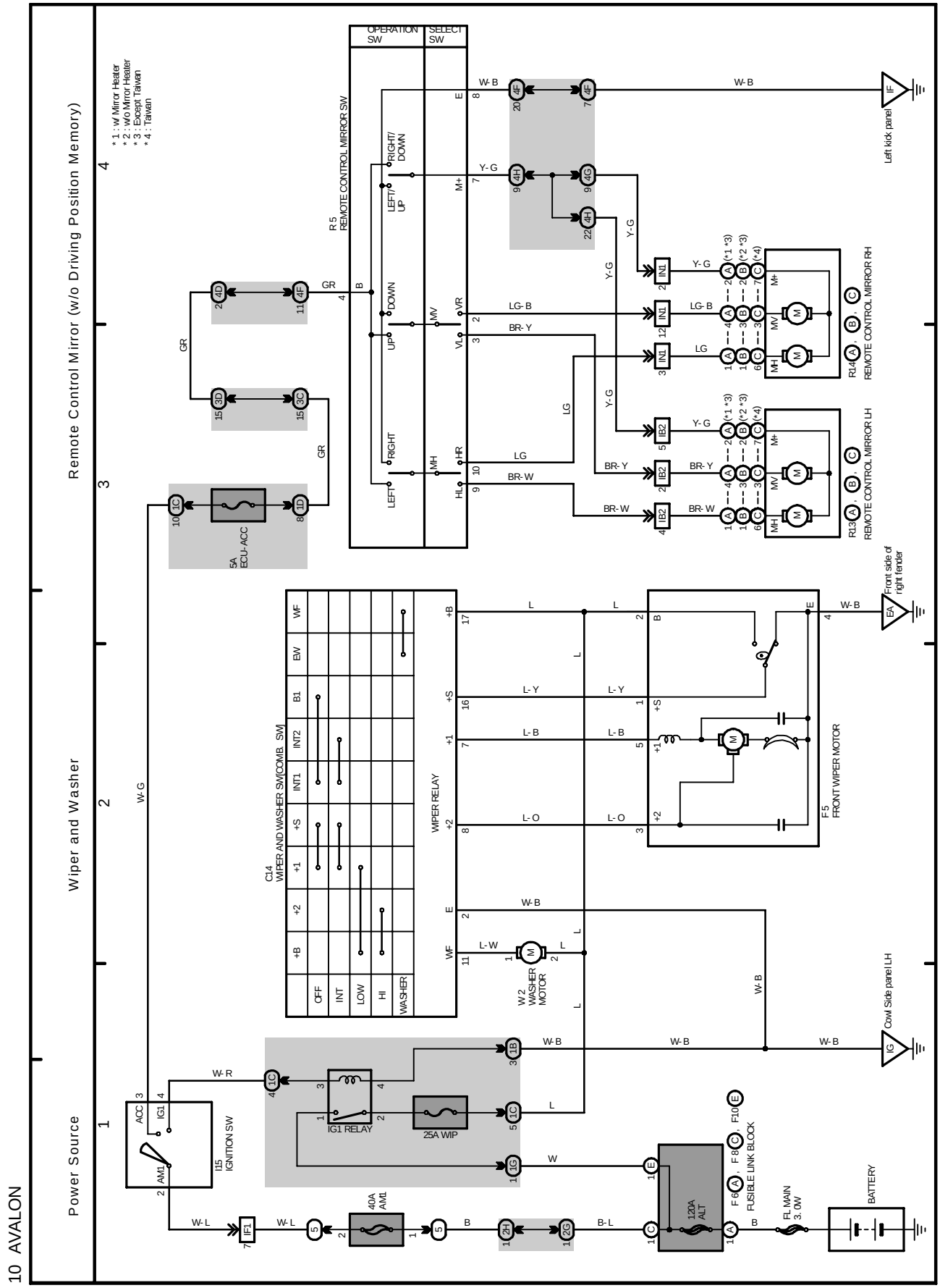

M OVERALL ELECTRICAL WIRING DIAGRAM

(Cont. next page)

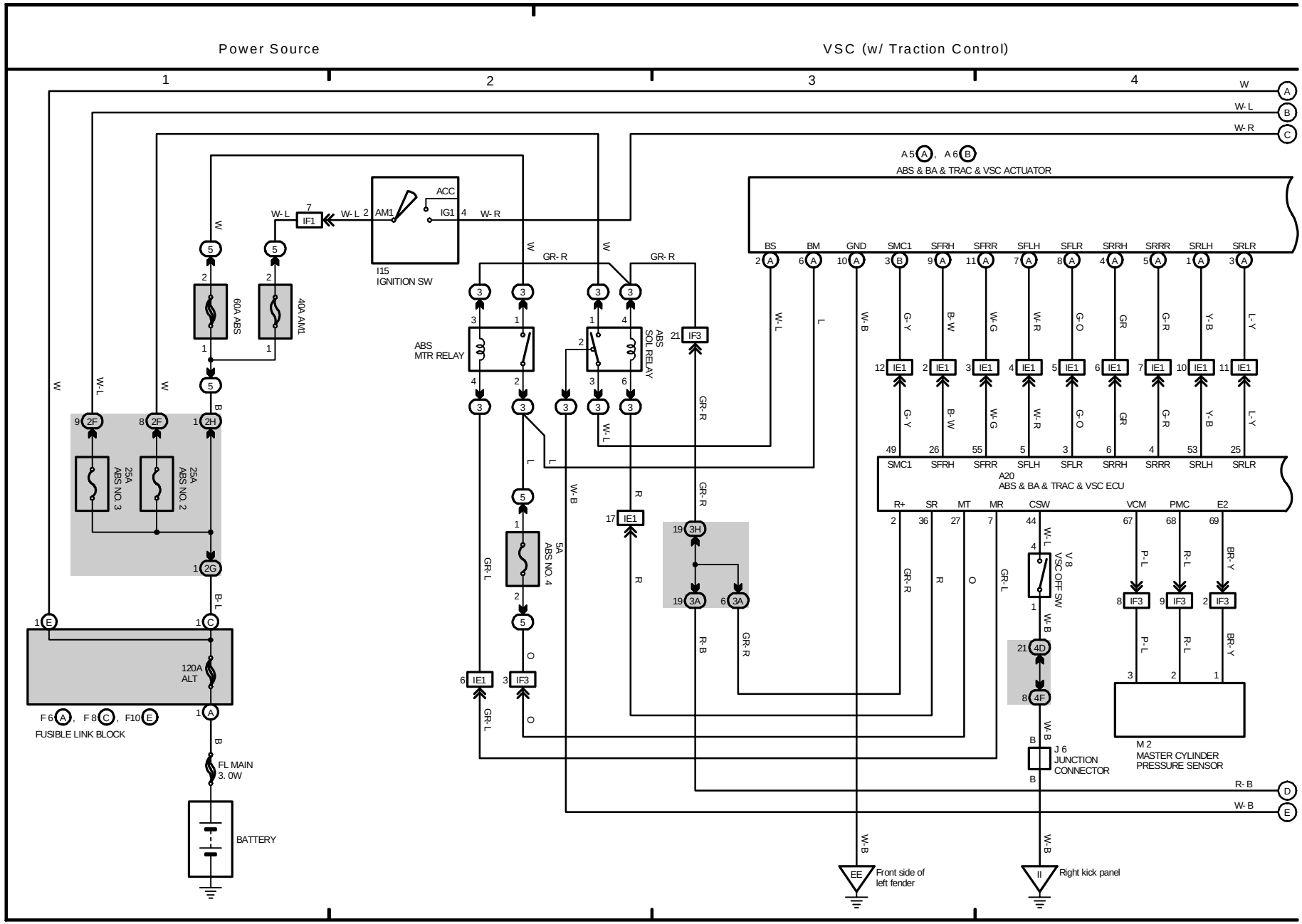

(Cont. next page)

VSC (w/ Traction Control)

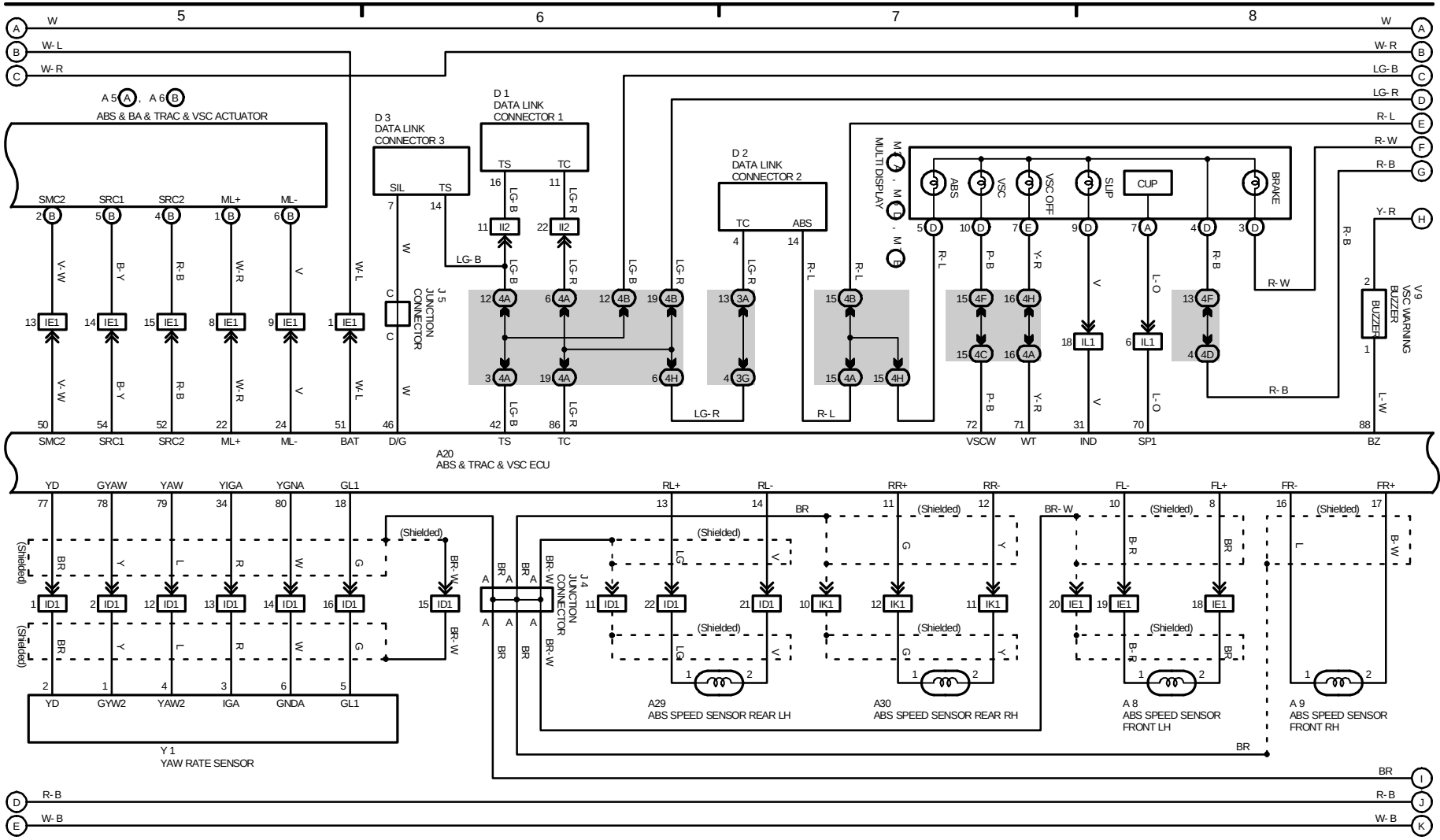

M OVERALL ELECTRICAL WIRING DIAGRAM

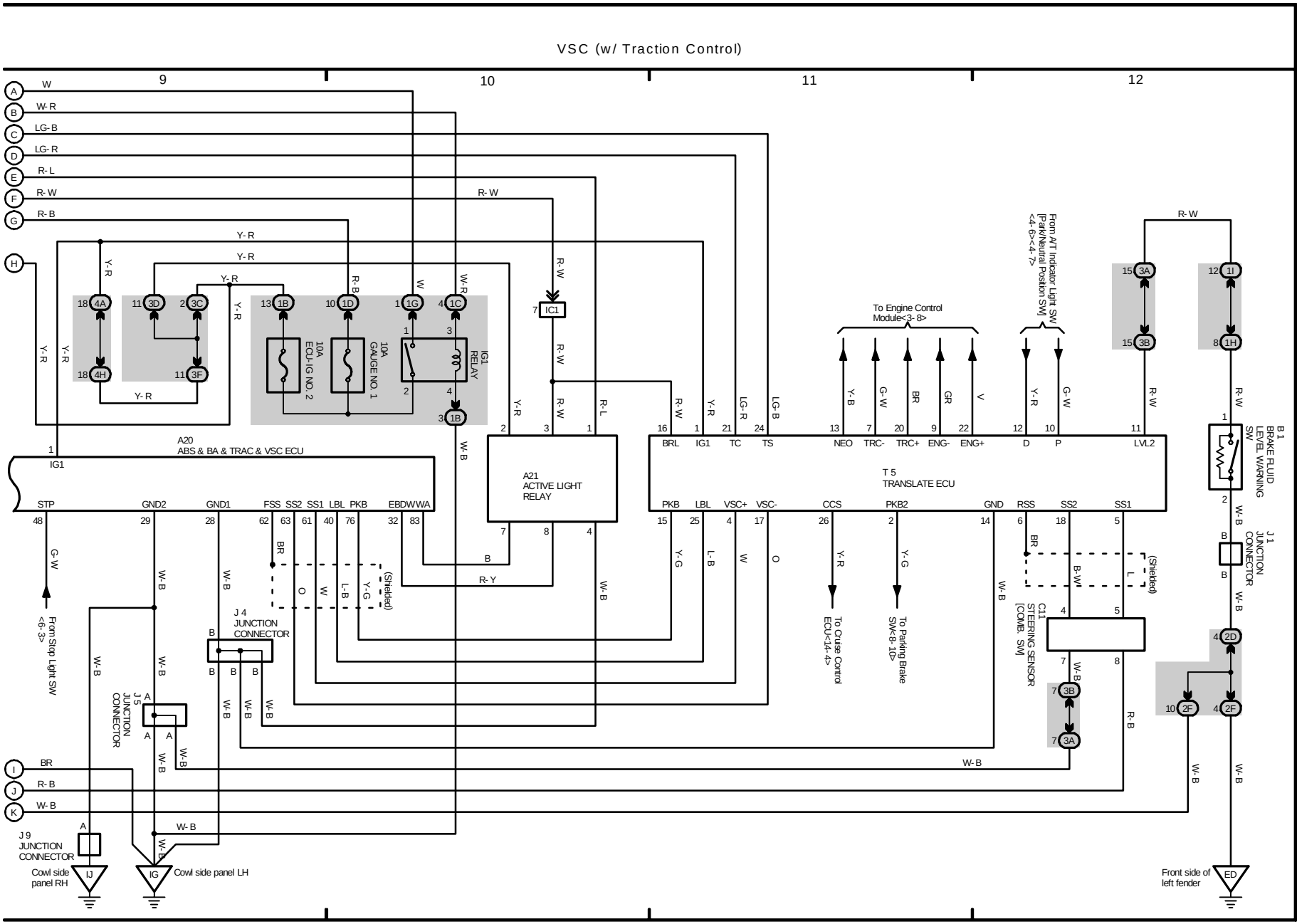
VSC (w/ Traction Control)
9
10
11
12
A20
ABS & BA & TRAC & VSC ECU
A21
ACTIVE LIGHT
RELAY
T 5
TRANSLATE ECU
10A
ECU-IG NO. 2
10A
GAUGE NO. 1
IG1
RELAY
IC1
To Engine Control
Module<3- 8>
From A/T Indicator Light SW
[Park/Neutral Position SW]
<4- 6><4- 7>
From Stop Light SW
<6- 3>
J 4
JUNCTION
CONNECTOR
J 5
JUNCTION
CONNECTOR
J 9
JUNCTION
CONNECTOR
J 1
JUNCTION
CONNECTOR
C11
STEERING SENSOR
[COMB. SW]
B 1
BRAKE FLUID
LEVEL WARNING
SW
To Cruise Control
ECU<14- 4>
To Parking Brake
SW<8- 10>
Cowl side
panel RH
Cowl side panel LH
Front side of
left fender
(Shielded)

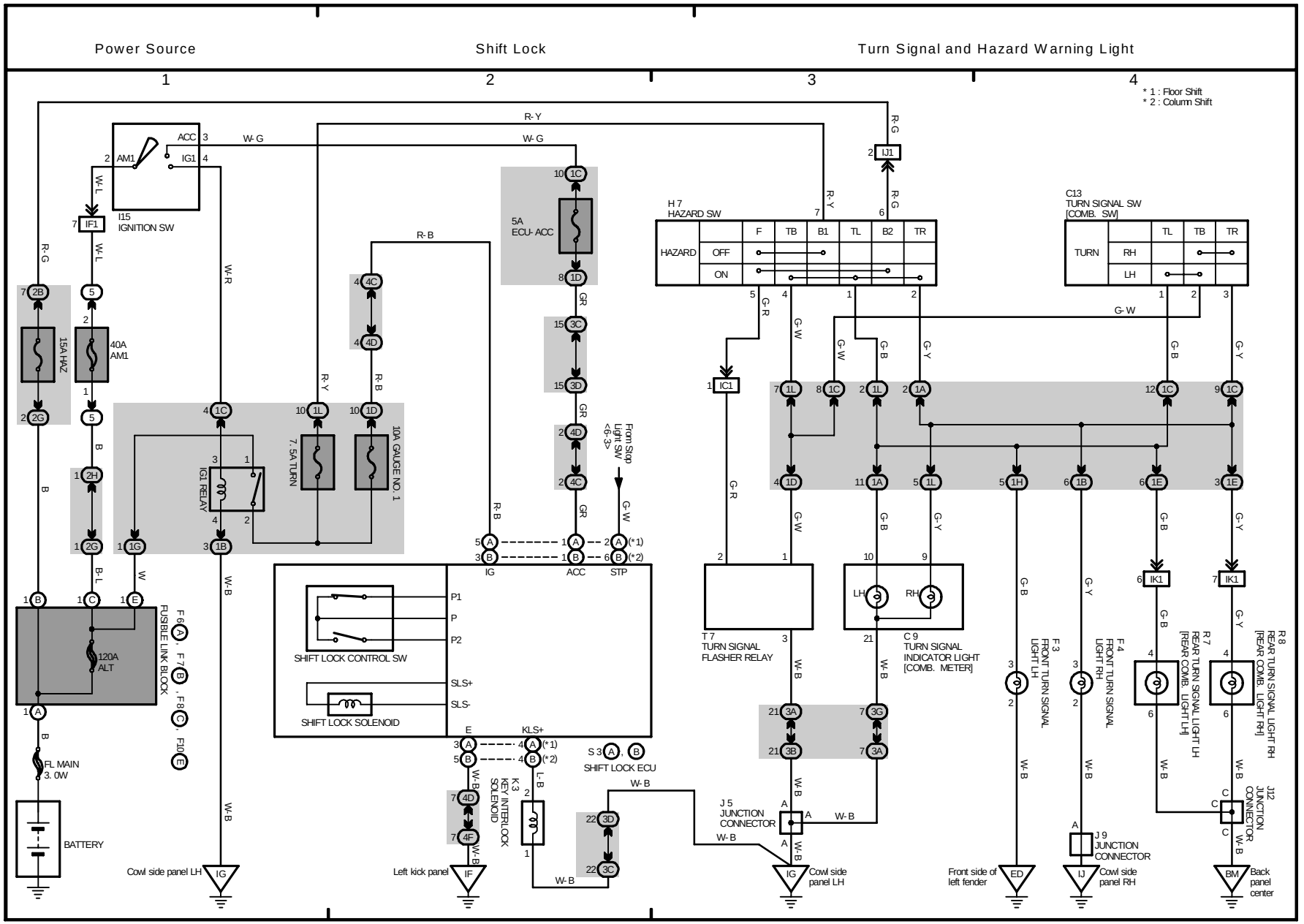
Power Source
Shift Lock
Turn Signal and Hazard Warning Light
1
2
3
4
* 1 : Floor Shift
* 2 : Column Shift
I15
IGNITION SW
ACC
IG1
AM1
15A HAZ
40A
AM1
7.5A TURN
10A GAUGE NO. 1
IG1 RELAY
5A
ECU-ACC
From Stop
Light SW
<6-3>
H 7
HAZARD SW
HAZARD
OFF
ON
C13
TURN SIGNAL SW
[COMB. SW]
TURN
RH
LH
T 7
TURN SIGNAL
FLASHER RELAY
C 9
TURN SIGNAL
INDICATOR LIGHT
[COMB. METER]
F 3
FRONT TURN SIGNAL
LIGHT LH
F 4
FRONT TURN SIGNAL
LIGHT RH
R 7
REAR TURN SIGNAL LIGHT LH
[REAR COMB. LIGHT LH]
R 8
REAR TURN SIGNAL LIGHT RH
[REAR COMB. LIGHT RH]
J 5
JUNCTION
CONNECTOR
J 9
JUNCTION
CONNECTOR
J12
JUNCTION
CONNECTOR
FUSIBLE LINK BLOCK
120A
ALT
FL MAIN
3. 0W
BATTERY
SHIFT LOCK CONTROL SW
SHIFT LOCK SOLENOID
SHIFT LOCK ECU
K 3
KEY INTERLOCK
SOLENOID
Cowl side panel LH
Left kick panel
Front side of
left fender
Cowl side
panel RH
Back
panel
center

M OVERALL ELECTRICAL WIRING DIAGRAM

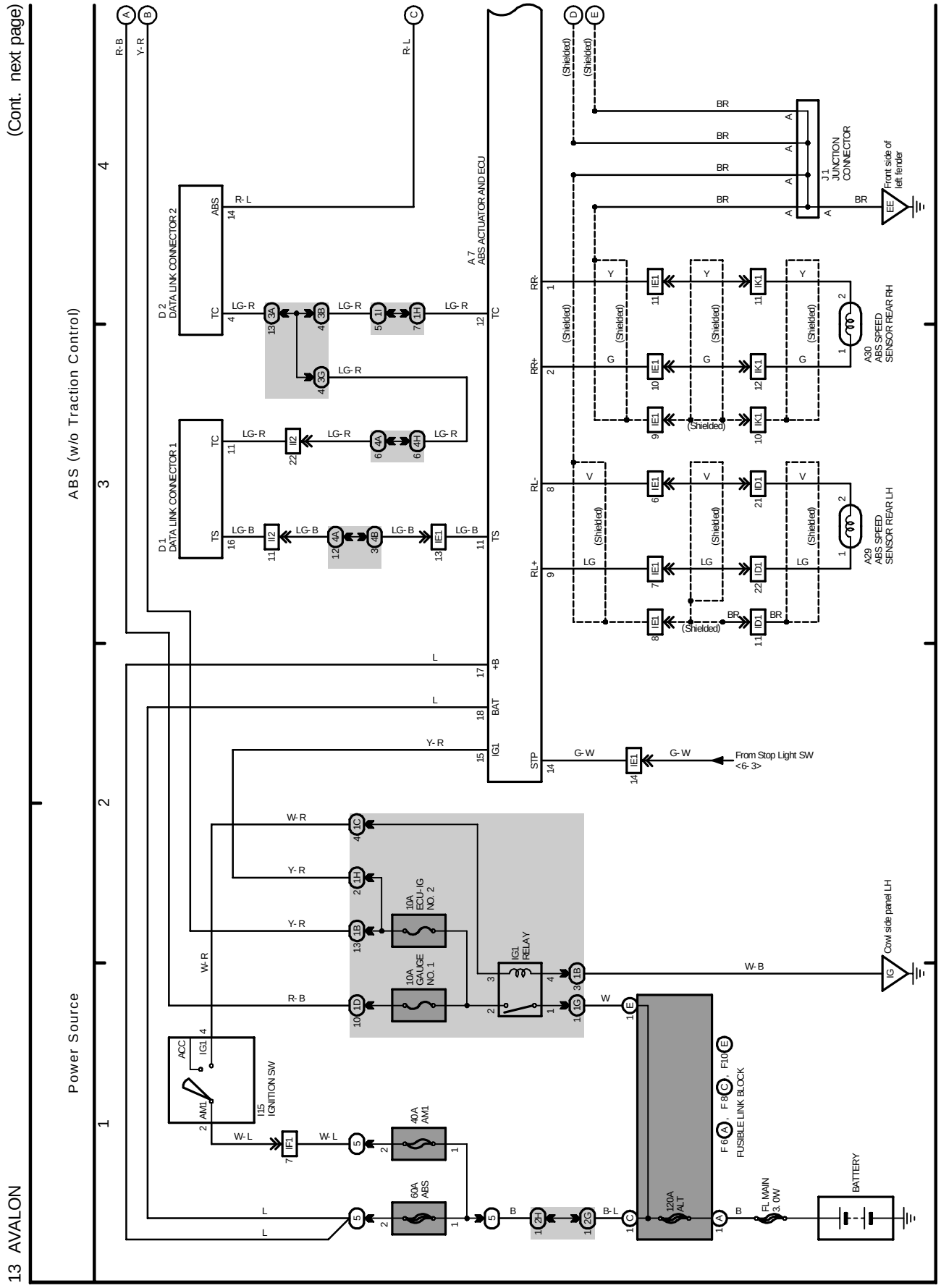

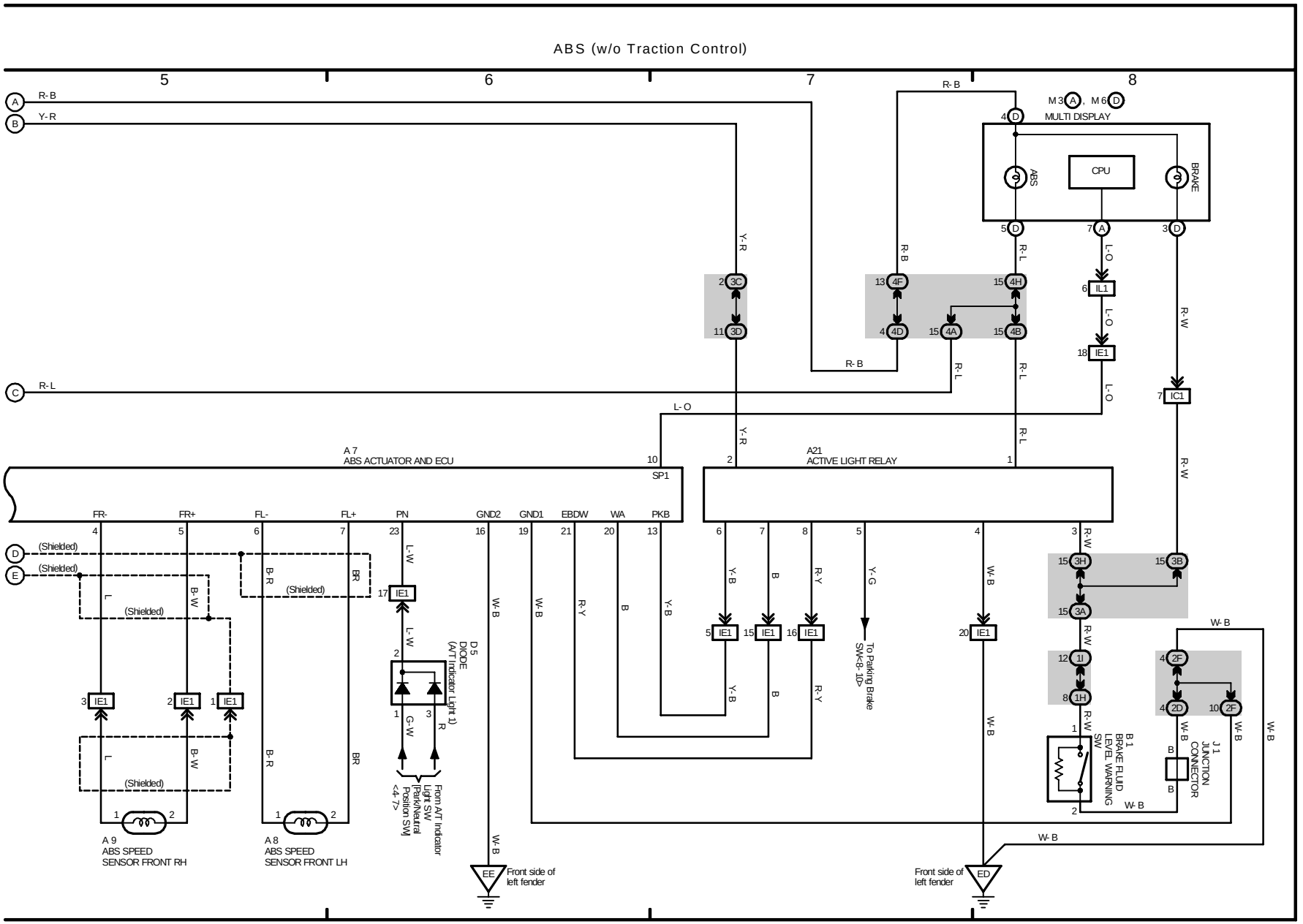
ABS (w/o Traction Control)
5
6
7
8
R-B
Y-R
R-L
C
L-O
M3 A , M6 D
MULTI DISPLAY
CPU
ABS
BRAKE
A7
ABS ACTUATOR AND ECU
SP1
A21
ACTIVE LIGHT RELAY
FR-
FR+
FL-
FL+
PN
GND2
GND1
EBDW
WA
PKB
(Shielded)
B-W
B-R
BR
L-W
G-W
R
D5
DIODE
(A/T Indicator Light 1)
From A/T Indicator Light SW [Park/Neutral Position SW] <4-7>
To Parking Brake SW<8-10>
W-B
R-Y
Y-B
B
Y-G
R-W
IE1
IL1
IC1
A9
ABS SPEED SENSOR FRONT RH
A8
ABS SPEED SENSOR FRONT LH
B1
BRAKE FLUID LEVEL WARNING SW
J1
JUNCTION CONNECTOR
EE
Front side of left fender
ED
Front side of left fender

M OVERALL ELECTRICAL WIRING DIAGRAM

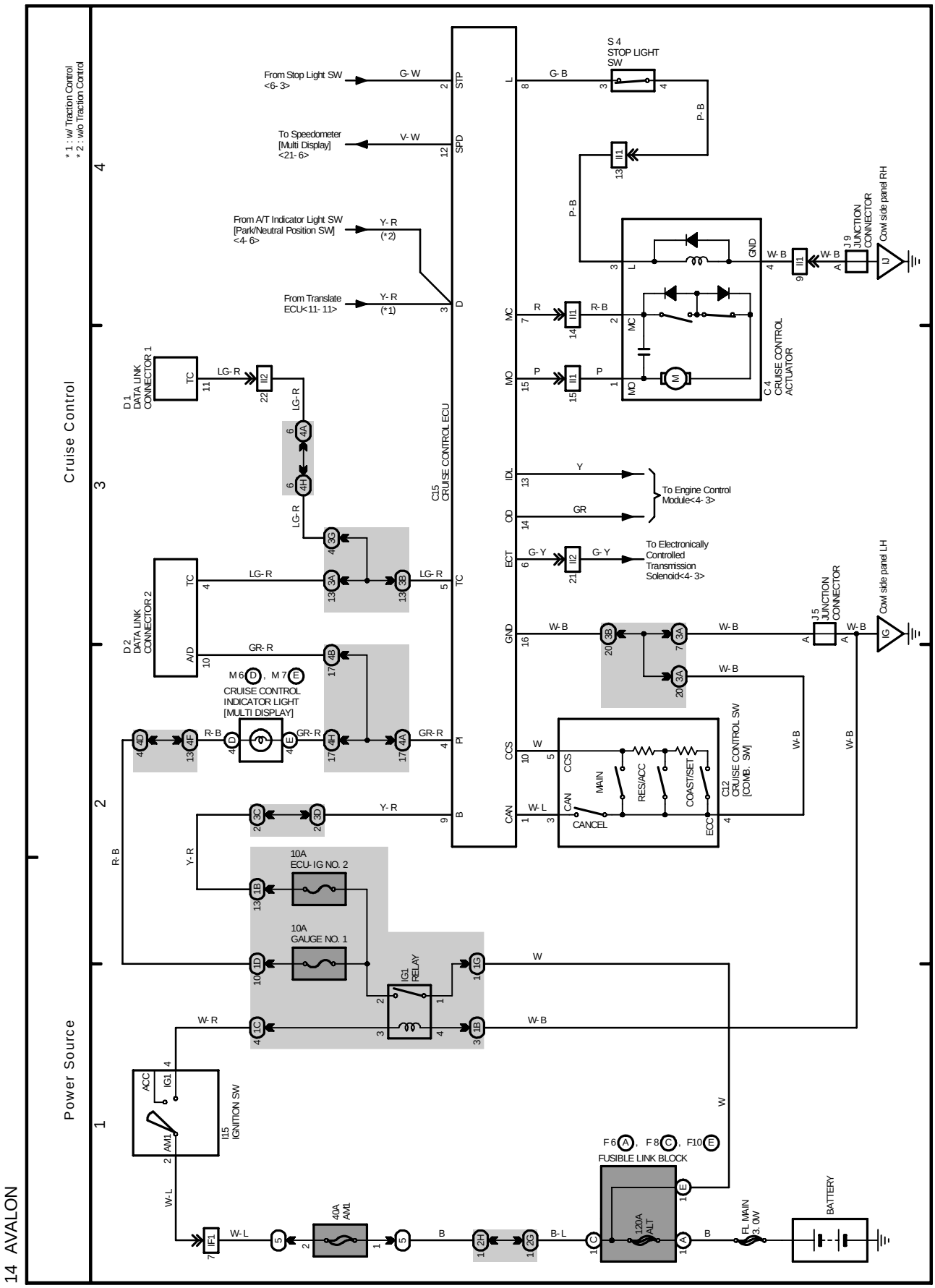

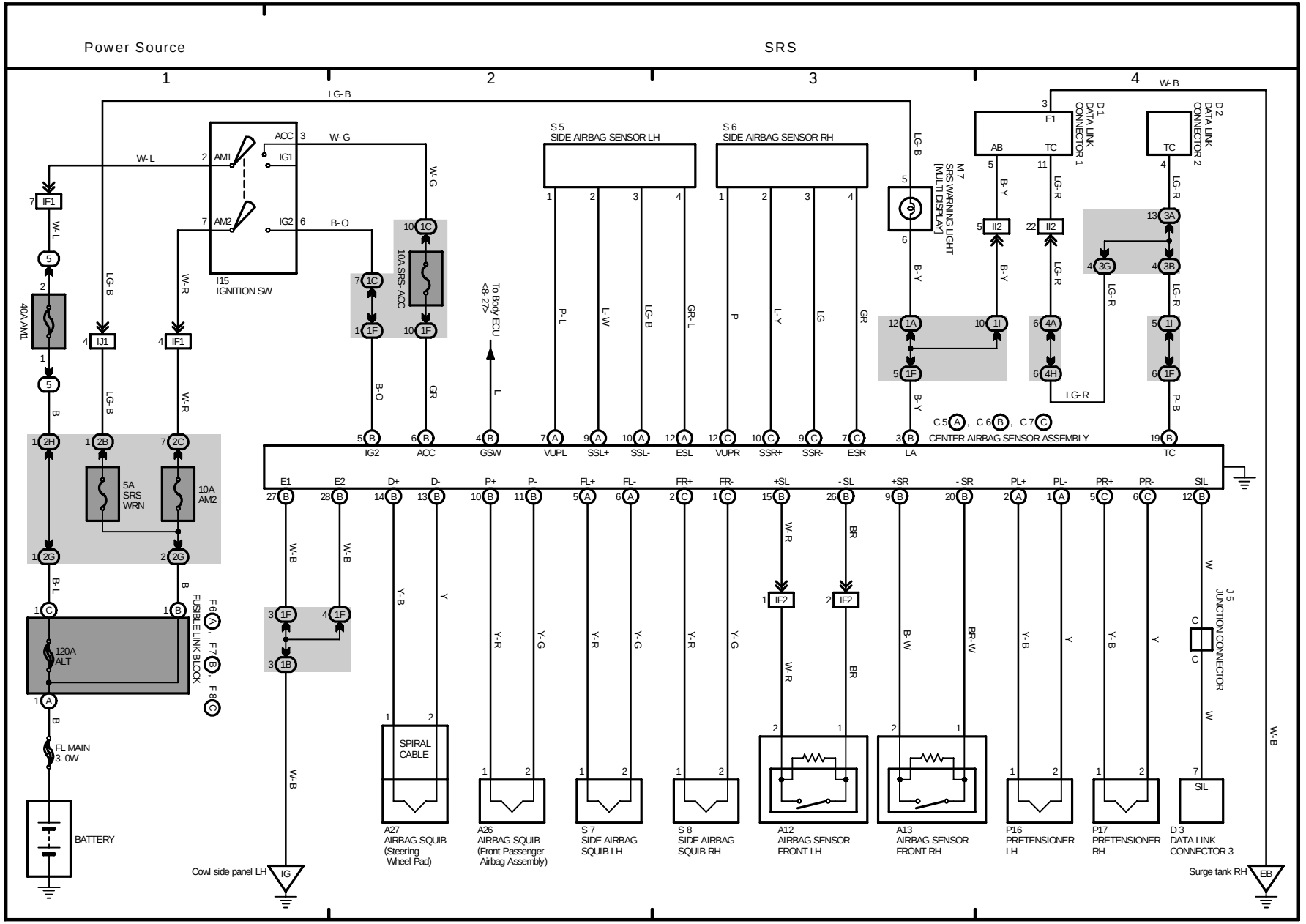
Power Source
SRS
1
2
3
4
LG-B
W-B
W-L
W-G
W-R
B-O
GR
L
P-L
L-W
LG-B
GR-L
P
L-Y
LG
GR
B-Y
LG-R
P-B
B
B-L
W-B
Y-B
Y
Y-R
Y-G
W-R
BR
B-W
BR-W
W
ACC
AM1
AM2
IG1
IG2
I15
IGNITION SW
40A AM1
5A SRS WRN
10A AM2
10A SRS-ACC
120A ALT
FUSIBLE LINK BLOCK
FL MAIN
3. 0W
BATTERY
To Body ECU <8-27>
S 5
SIDE AIRBAG SENSOR LH
S 6
SIDE AIRBAG SENSOR RH
M 7
SRS WARNING LIGHT [MULTI DISPLAY]
D 1
DATA LINK CONNECTOR 1
D 2
DATA LINK CONNECTOR 2
C 5 (A), C 6 (B), C 7 (C)
CENTER AIRBAG SENSOR ASSEMBLY
IG2
ACC
GSW
VUPL
SSL+
SSL-
ESL
VUPR
SSR+
SSR-
ESR
LA
TC
E1
E2
D+
D-
P+
P-
FL+
FL-
FR+
FR-
+SL
- SL
+SR
- SR
PL+
PL-
PR+
PR-
SIL
J 5
JUNCTION CONNECTOR
SPIRAL CABLE
A27
AIRBAG SQUIB (Steering Wheel Pad)
A26
AIRBAG SQUIB (Front Passenger Airbag Assembly)
S 7
SIDE AIRBAG SQUIB LH
S 8
SIDE AIRBAG SQUIB RH
A12
AIRBAG SENSOR FRONT LH
A13
AIRBAG SENSOR FRONT RH
P16
PRETENSIONER LH
P17
PRETENSIONER RH
D 3
DATA LINK CONNECTOR 3
Cowl side panel LH
IG
Surge tank RH
EB

M OVERALL ELECTRICAL WIRING DIAGRAM

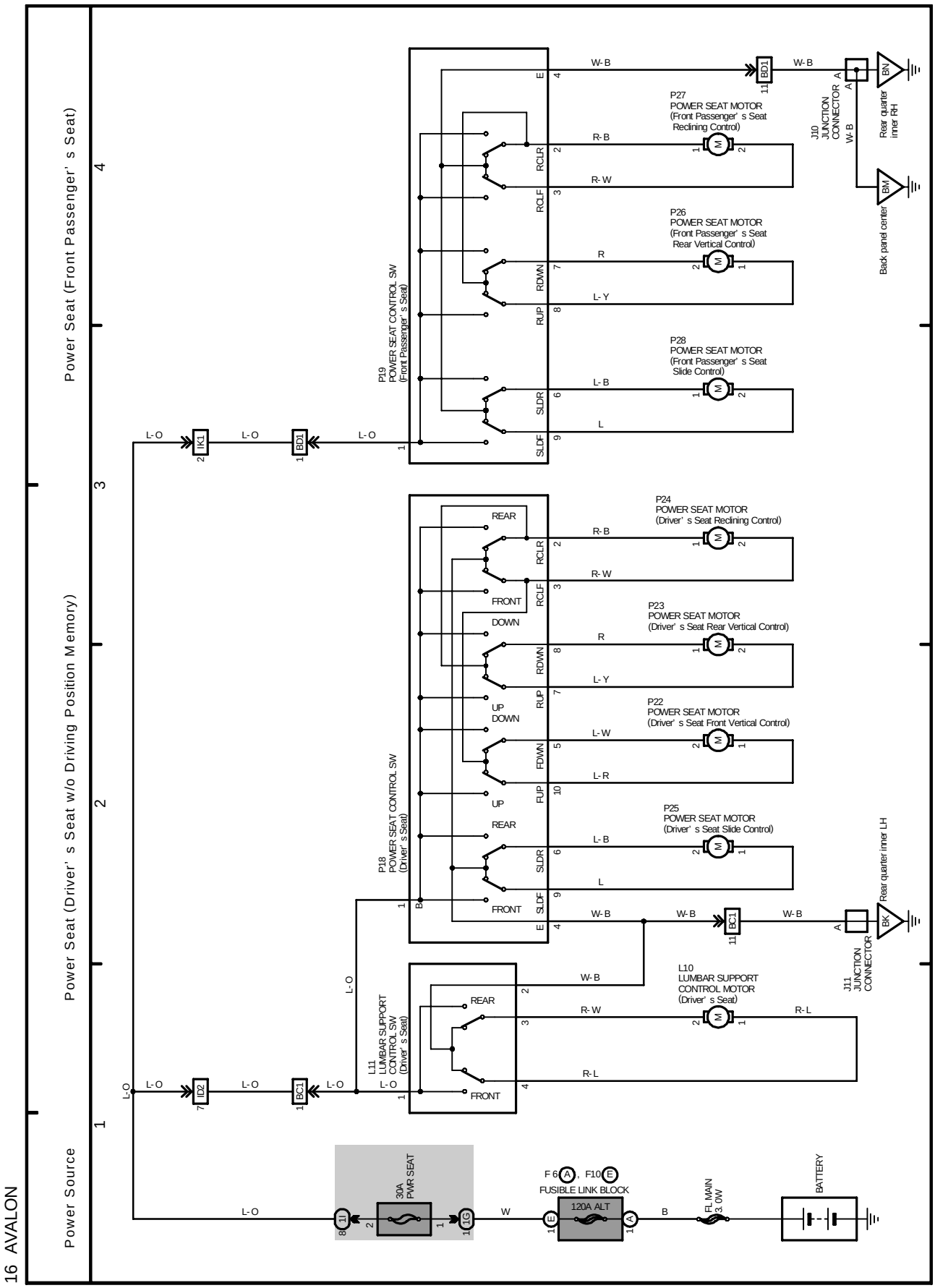

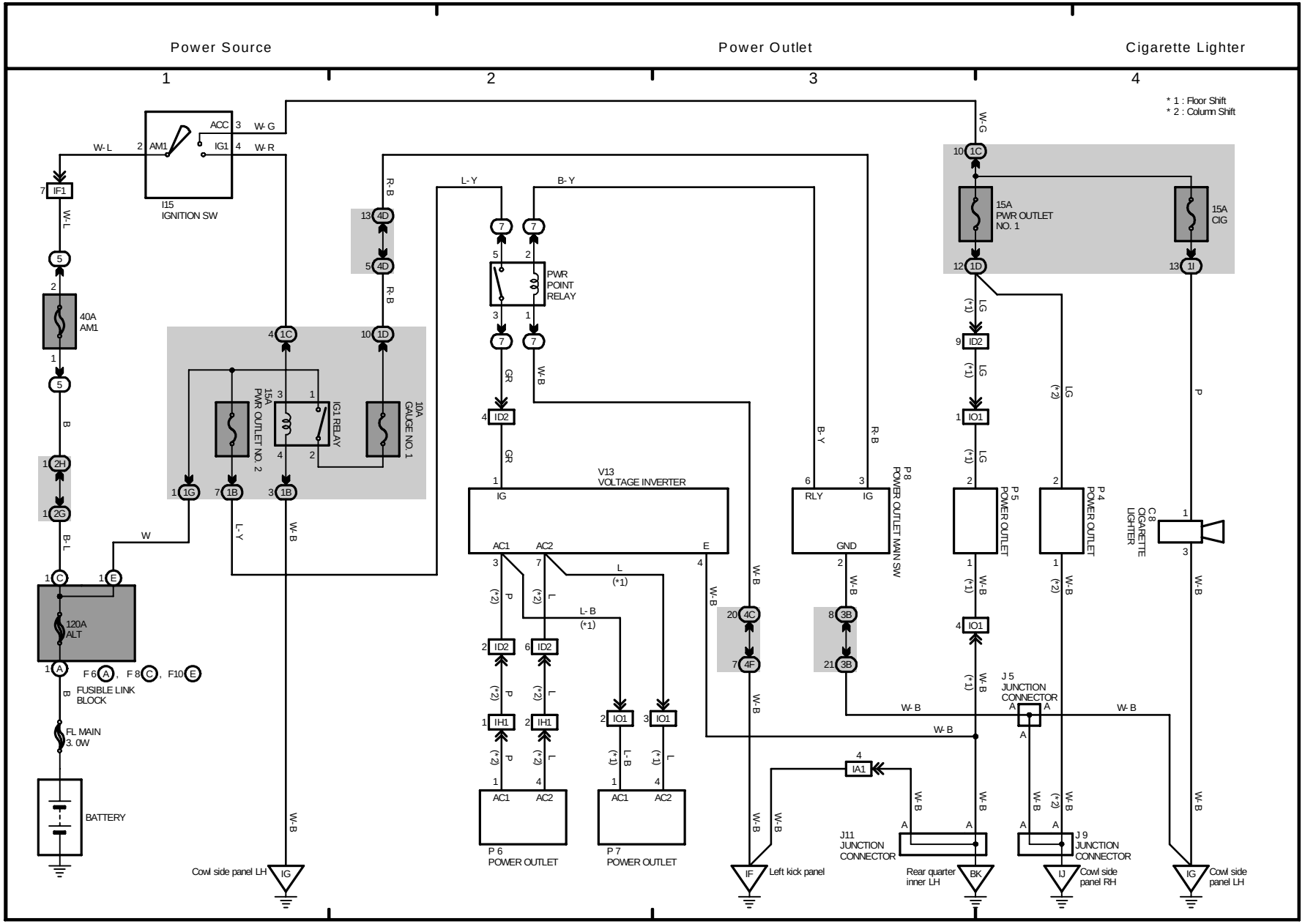
Power Source
Power Outlet
Cigarette Lighter
1
2
3
4
* 1 : Floor Shift
* 2 : Column Shift
I15
IGNITION SW
ACC
IG1
AM1
40A
AM1
15A
PWR OUTLET
NO. 1
15A
CIG
15A
PWR OUTLET NO. 2
IG1 RELAY
10A
GAUGE NO. 1
PWR
POINT
RELAY
V13
VOLTAGE INVERTER
P 8
POWER OUTLET MAIN SW
P 5
POWER OUTLET
P 4
POWER OUTLET
C 8
CIGARETTE
LIGHTER
120A
ALT
FUSIBLE LINK
BLOCK
FL MAIN
3. 0W
BATTERY
J 5
JUNCTION
CONNECTOR
J11
JUNCTION
CONNECTOR
J 9
JUNCTION
CONNECTOR
P 6
POWER OUTLET
P 7
POWER OUTLET
Cowl side panel LH
Left kick panel
Rear quarter
inner LH
Cowl side
panel RH
Cowl side
panel LH

M OVERALL ELECTRICAL WIRING DIAGRAM

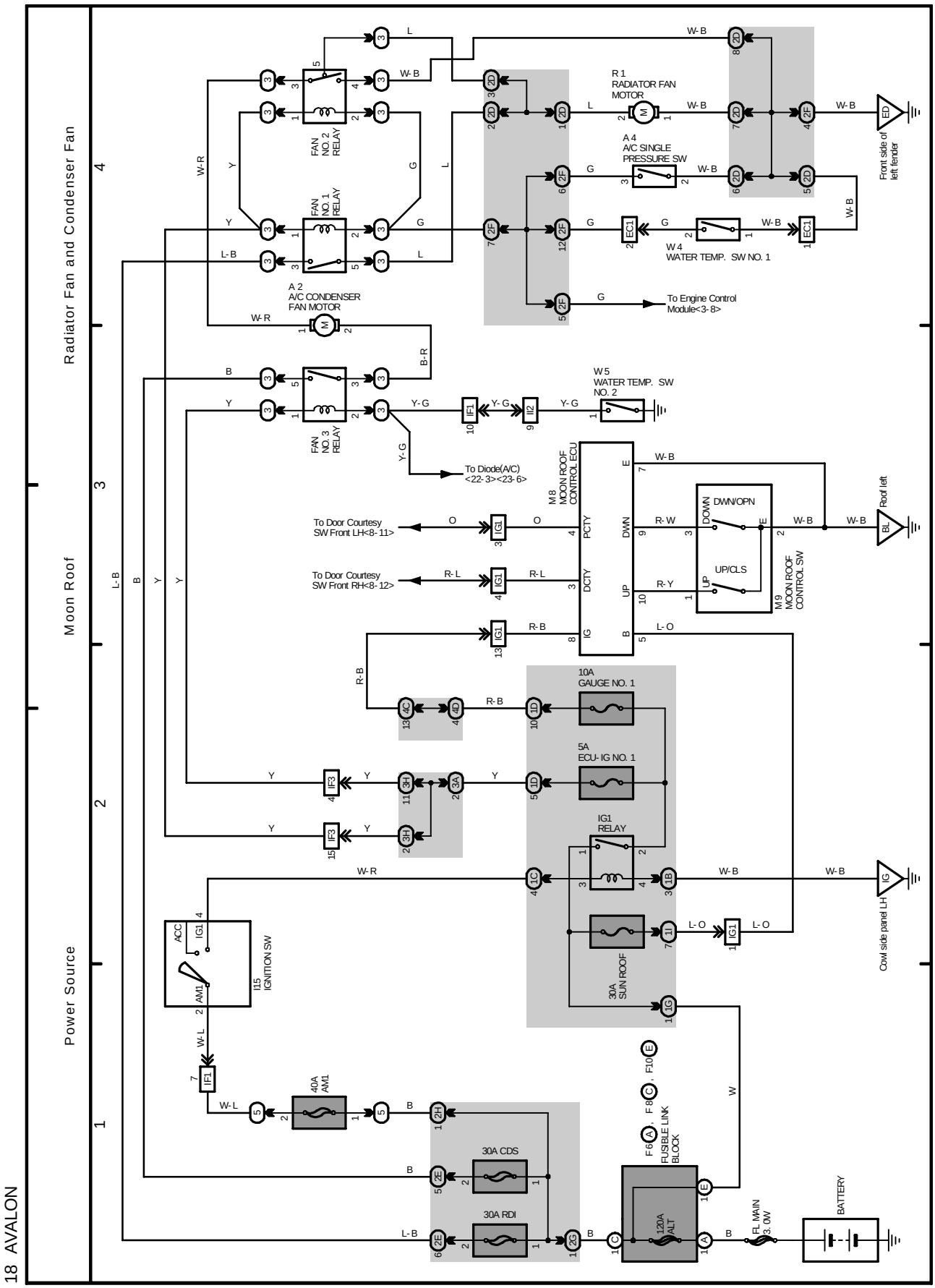

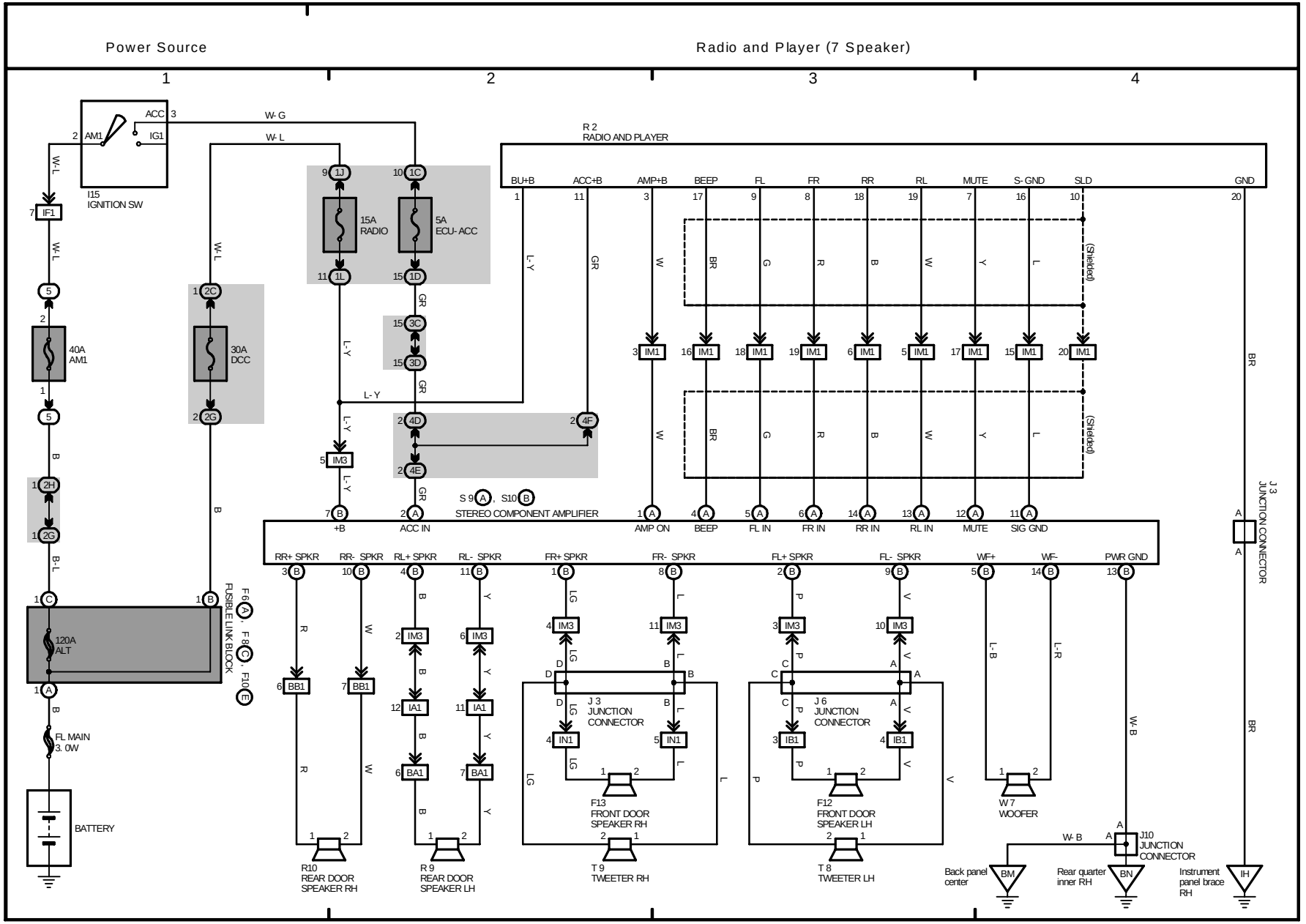
Power Source
Radio and Player (7 Speaker)
1
2
3
4
I15
IGNITION SW
ACC
AM1
IG1
W-G
W-L
IF1
40A
AM1
30A
DCC
15A
RADIO
5A
ECU-ACC
120A
ALT
FUSIBLE LINK BLOCK
F6, F8, F10
FL MAIN
3.0W
BATTERY
R 2
RADIO AND PLAYER
BU+B
ACC+B
AMP+B
BEEP
FL
FR
RR
RL
MUTE
S-GND
SLD
GND
(Shielded)
S 9, S10
STEREO COMPONENT AMPLIFIER
+B
ACC IN
AMP ON
BEEP
FL IN
FR IN
RR IN
RL IN
MUTE
SIG GND
J 3
JUNCTION CONNECTOR
RR+ SPKR
RR- SPKR
RL+ SPKR
RL- SPKR
FR+ SPKR
FR- SPKR
FL+ SPKR
FL- SPKR
WF+
WF-
PWR GND
J 3
JUNCTION
CONNECTOR
J 6
JUNCTION
CONNECTOR
F13
FRONT DOOR
SPEAKER RH
F12
FRONT DOOR
SPEAKER LH
W 7
WOOFER
R10
REAR DOOR
SPEAKER RH
R 9
REAR DOOR
SPEAKER LH
T 9
TWEETER RH
T 8
TWEETER LH
J10
JUNCTION
CONNECTOR
Back panel
center
Rear quarter
inner RH
Instrument
panel brace
RH

M OVERALL ELECTRICAL WIRING DIAGRAM

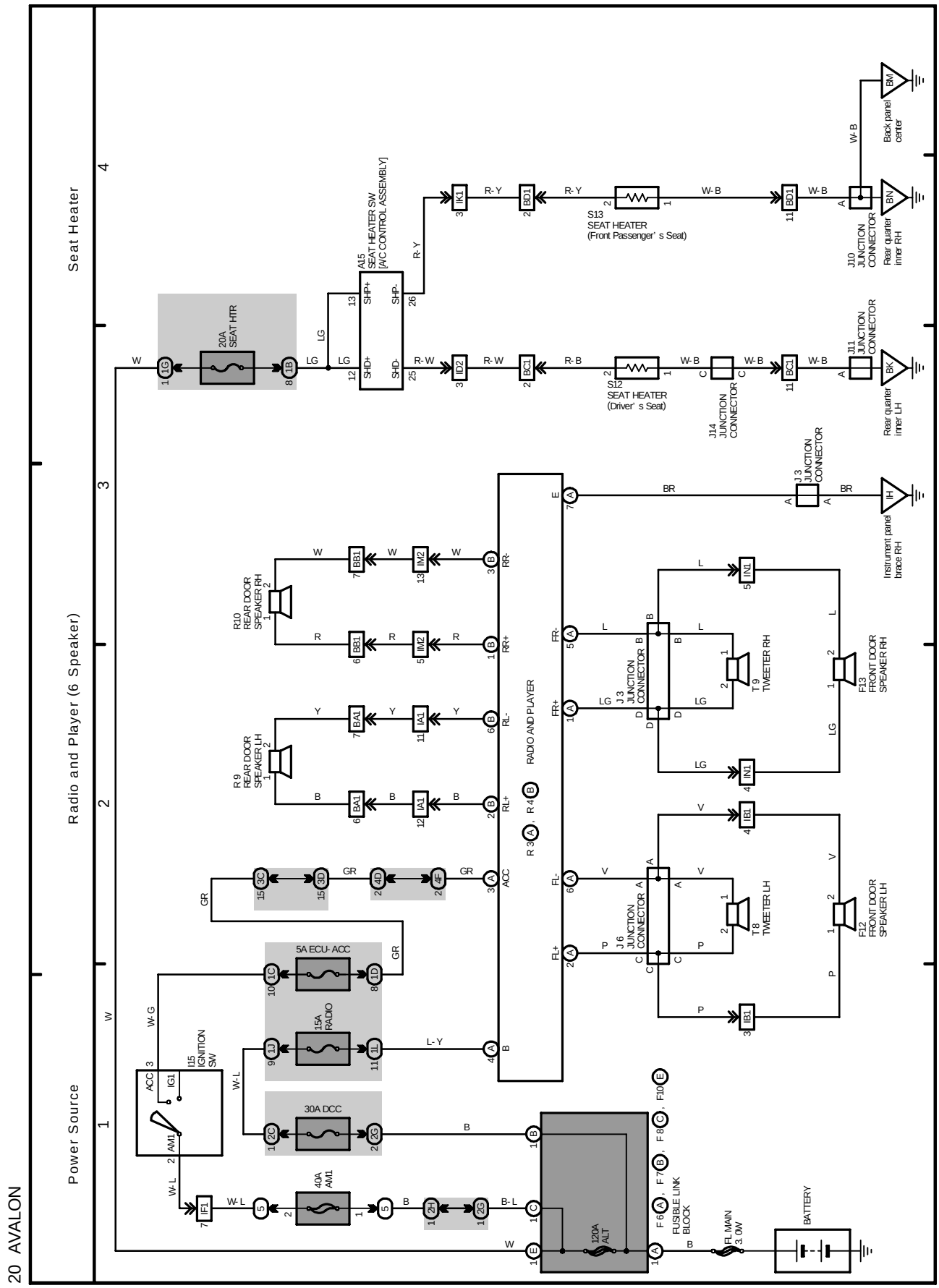

M OVERALL ELECTRICAL WIRING DIAGRAM

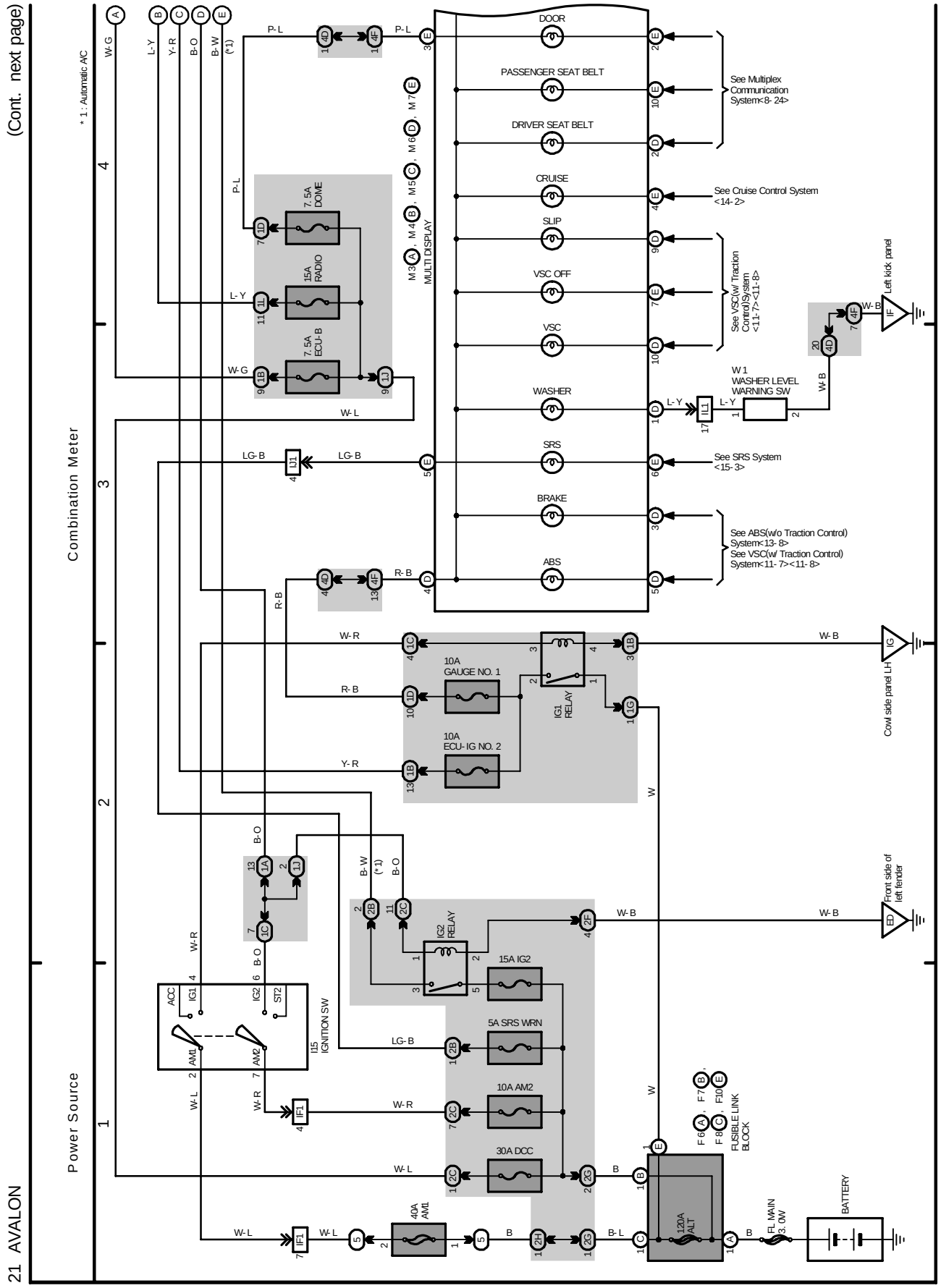

(Cont. next page)

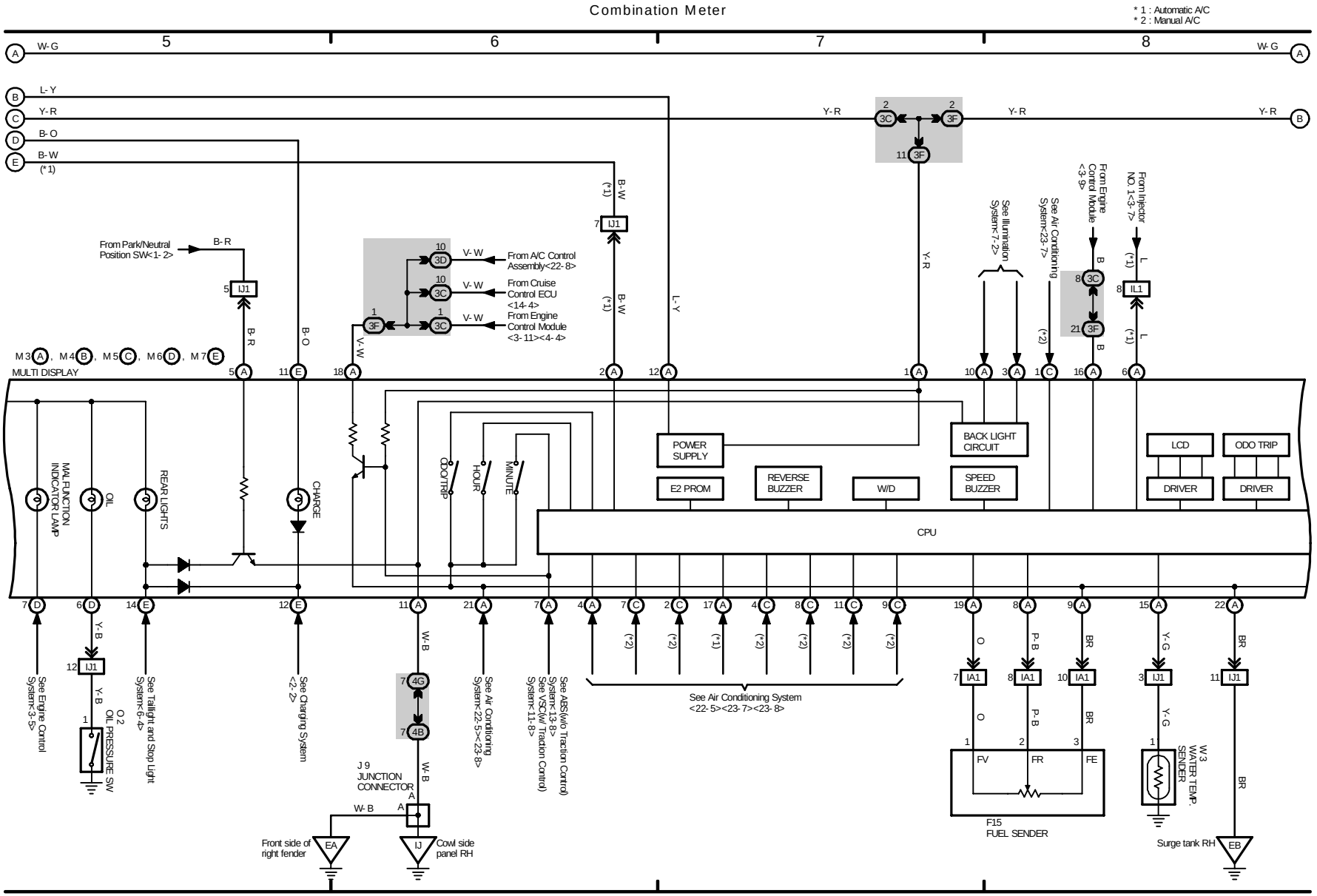

M OVERALL ELECTRICAL WIRING DIAGRAM

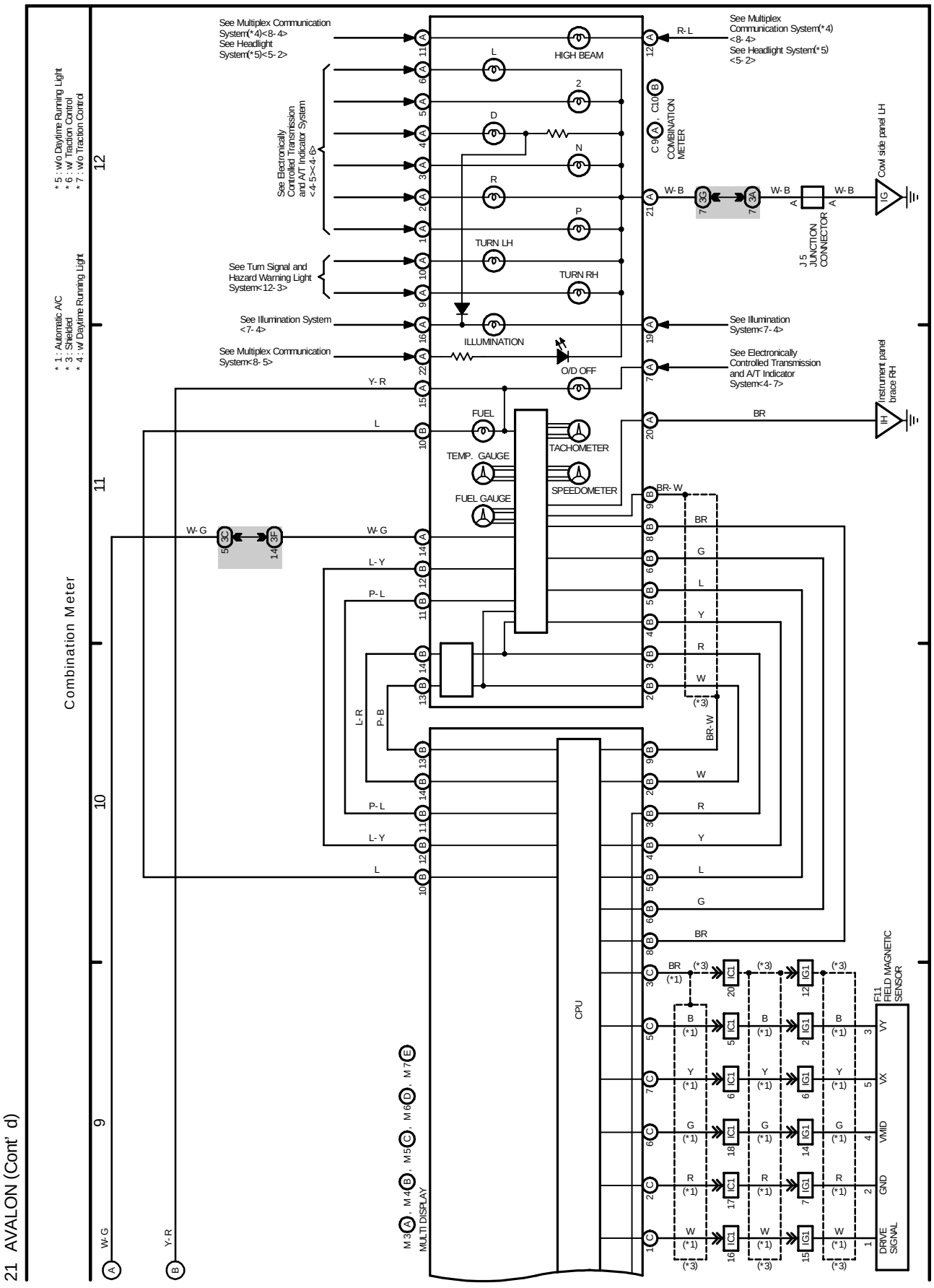

M OVERALL ELECTRICAL WIRING DIAGRAM

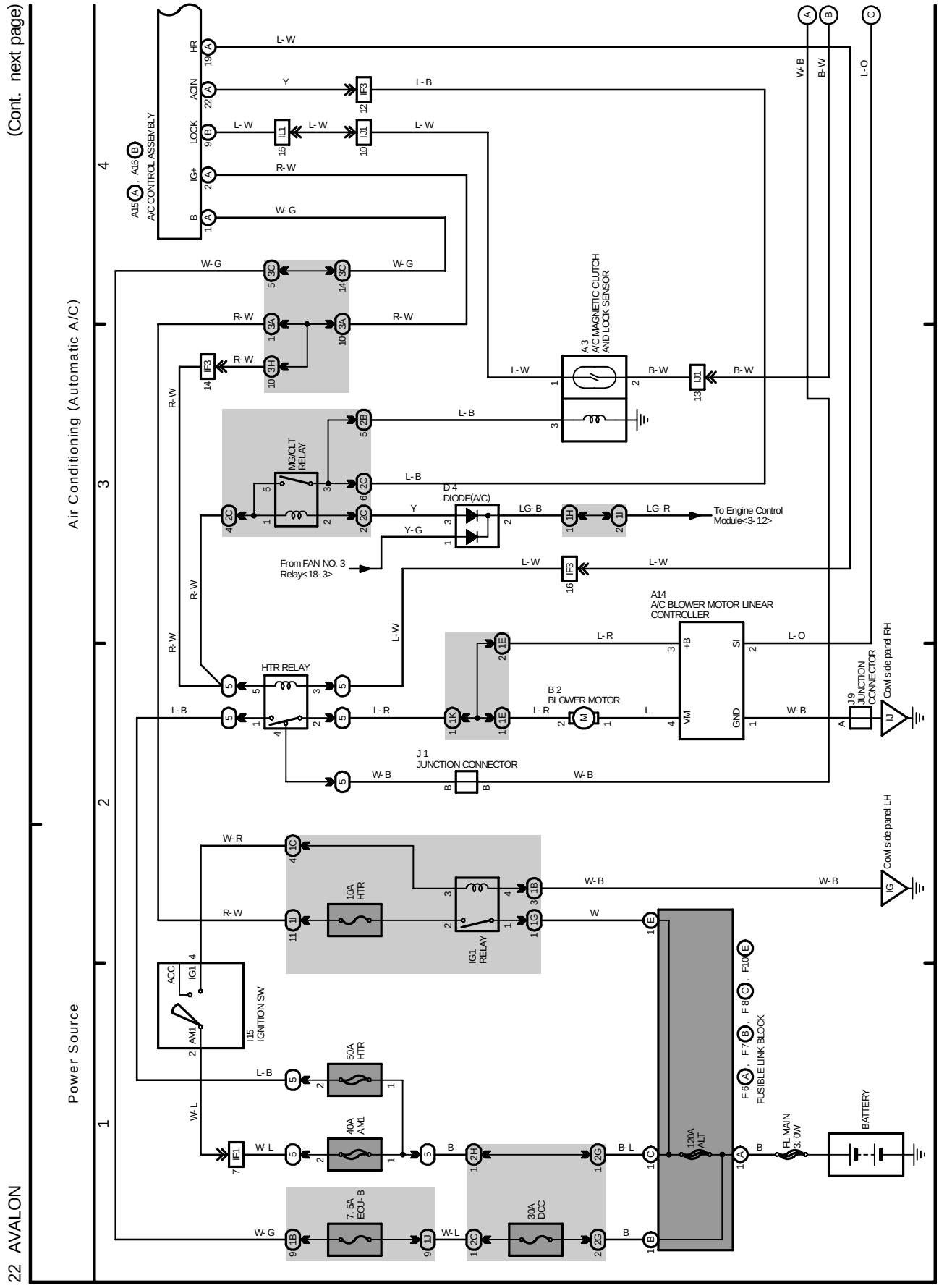

(Cont. next page)

Air Conditioning (Automatic A/C)

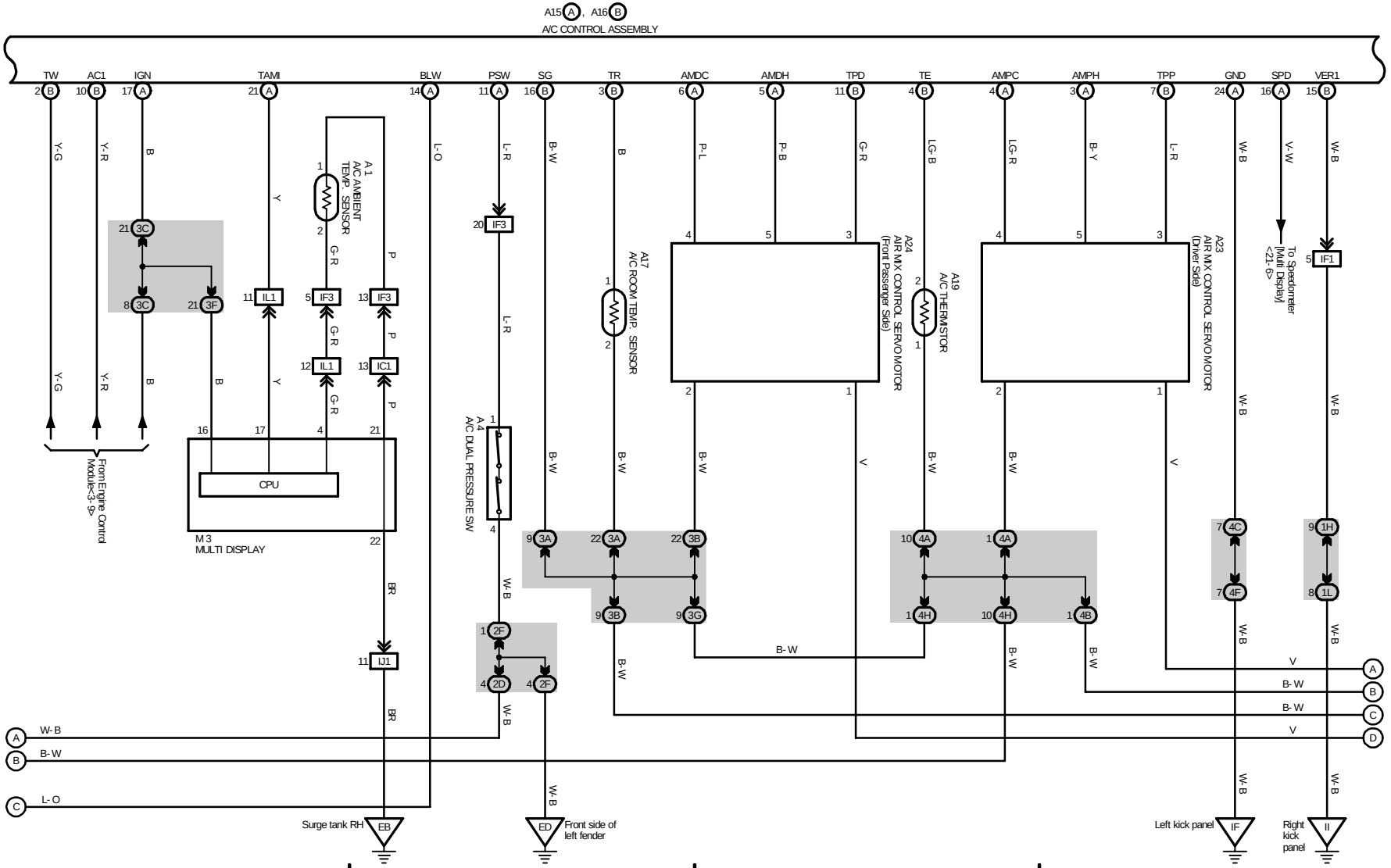

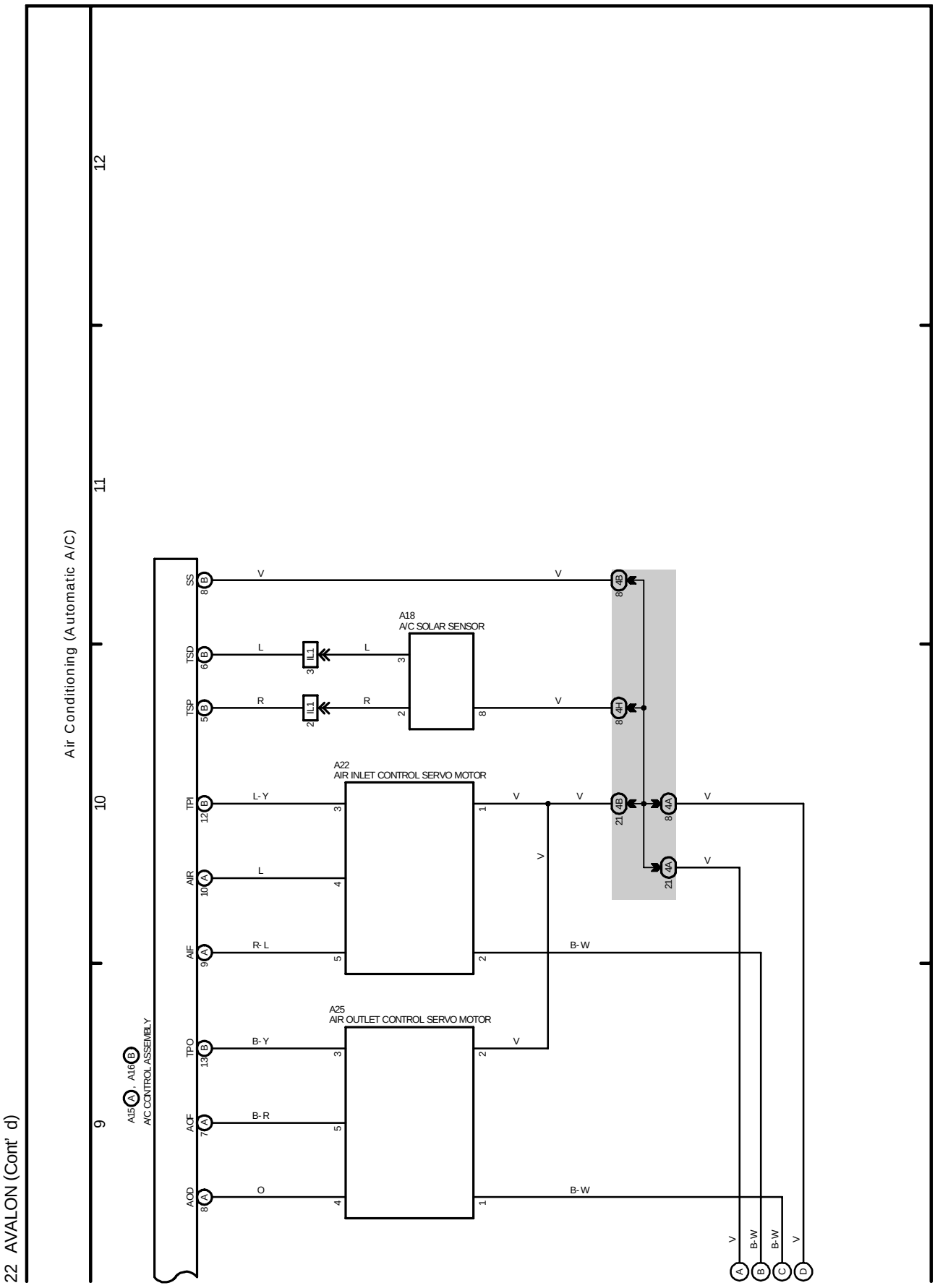
22 AVALON (Cont' d)
Air Conditioning (Automatic A/C)
12
11
10
9
A18
A/C SOLAR SENSOR
A22
AIR INLET CONTROL SERVO MOTOR
A25
AIR OUTLET CONTROL SERVO MOTOR
A/C CONTROL ASSEMBLY
A15
A16
SS
TSD
TSP
TPI
AIR
AIF
TPO
ACF
ACD
IL1
V
L
R
L-Y
R-L
B-Y
B-R
O
B-W

M OVERALL ELECTRICAL WIRING DIAGRAM

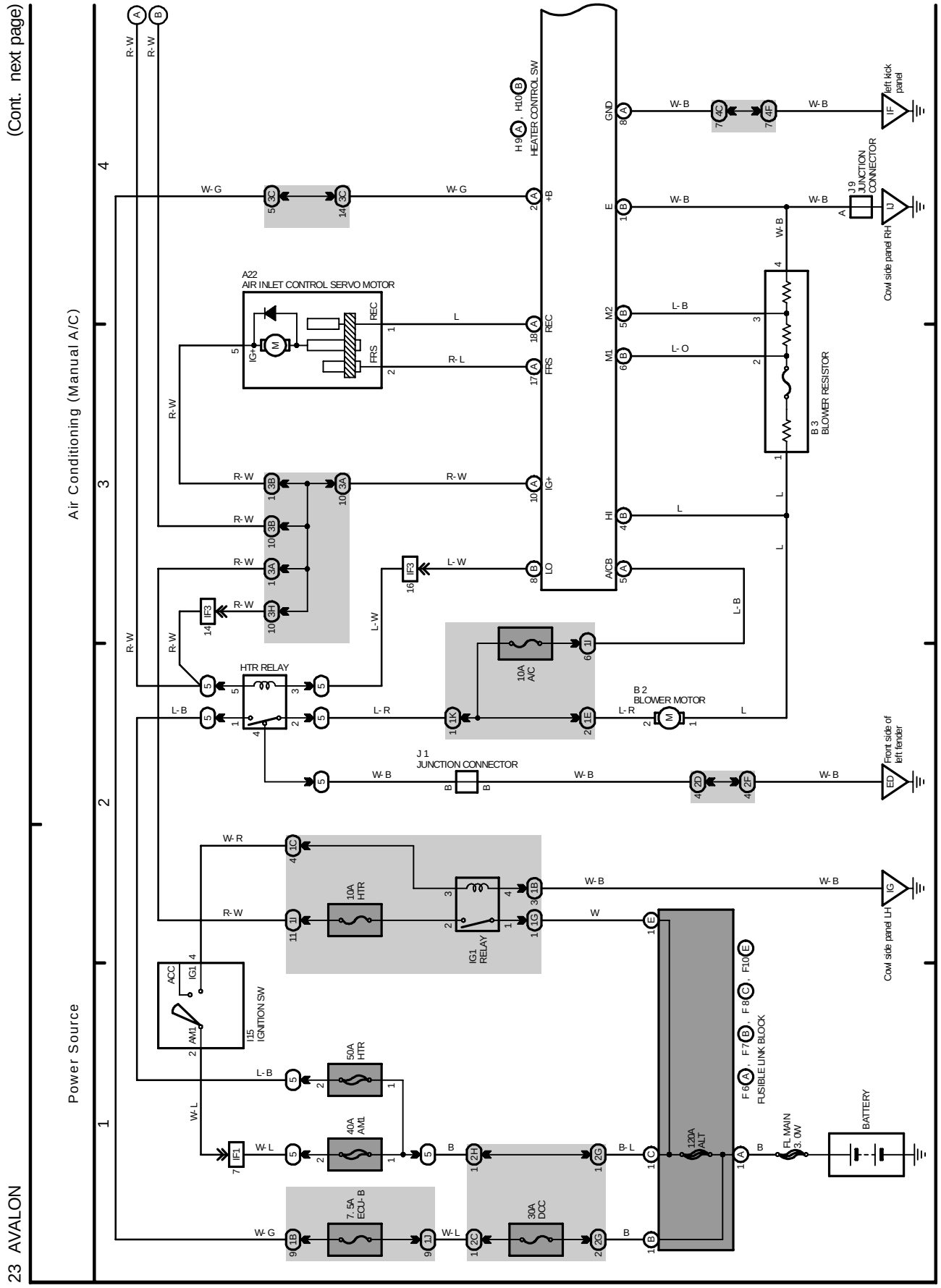

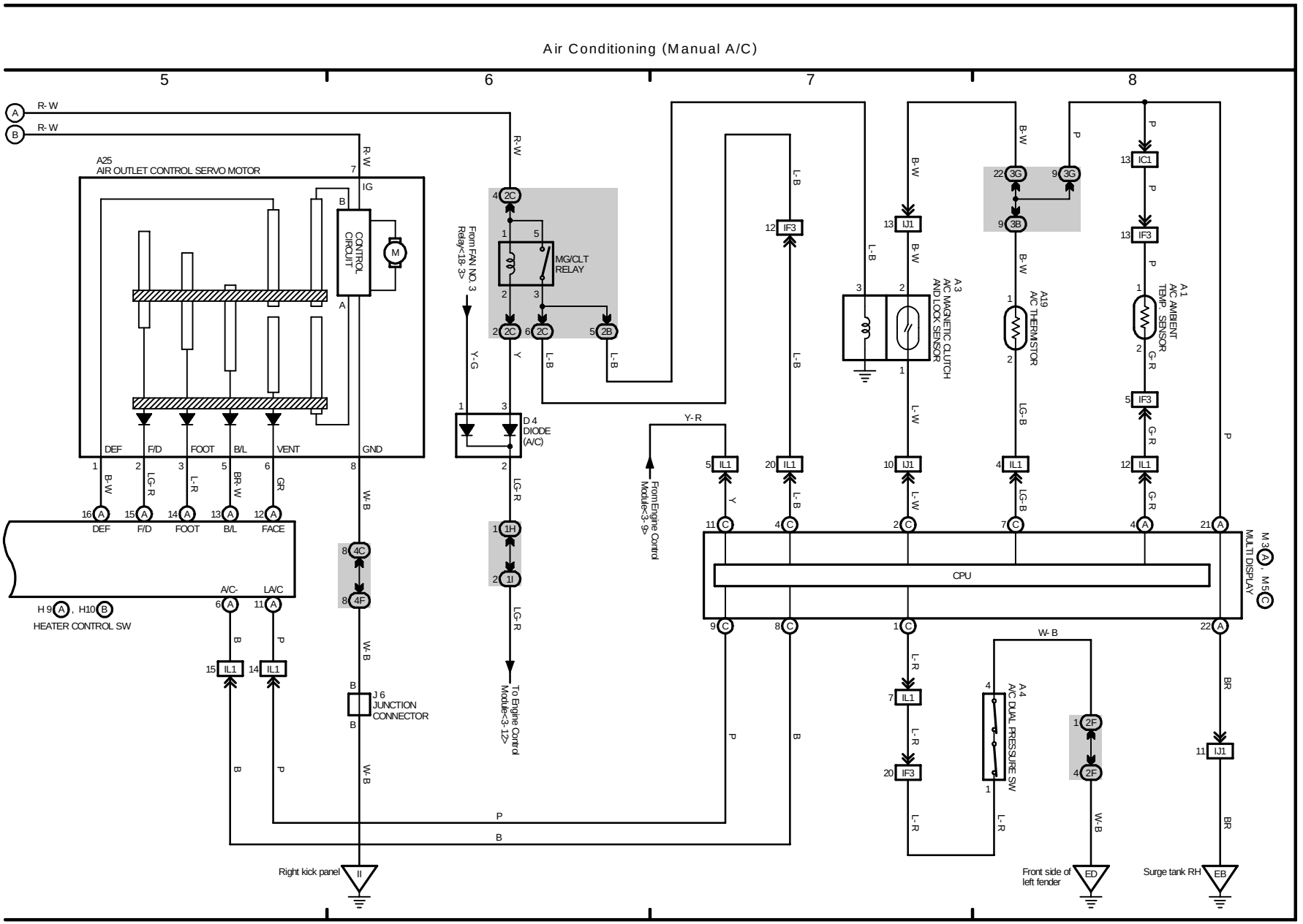
Air Conditioning (Manual A/C)
5
6
7
8
A25
AIR OUTLET CONTROL SERVO MOTOR
CONTROL CIRCUIT
MG/CLT RELAY
From FAN NO. 3 Relay<18-3>
D 4
DIODE (A/C)
DEF
F/D
FOOT
B/L
VENT
GND
H 9 , H10
HEATER CONTROL SW
A/C-
LA/C
DEF
F/D
FOOT
B/L
FACE
J 6
JUNCTION CONNECTOR
To Engine Control Module<3-12>
From Engine Control Module<3-9>
A3
A/C MAGNETIC CLUTCH AND LOCK SENSOR
A19
A/C THERMISTOR
A1
A/C AMBIENT TEMP. SENSOR
CPU
M 3 , M 5
MULTI DISPLAY
A4
A/C DUAL PRESSURE SW
Right kick panel
Front side of left fender
Surge tank RH

M OVERALL ELECTRICAL WIRING DIAGRAM

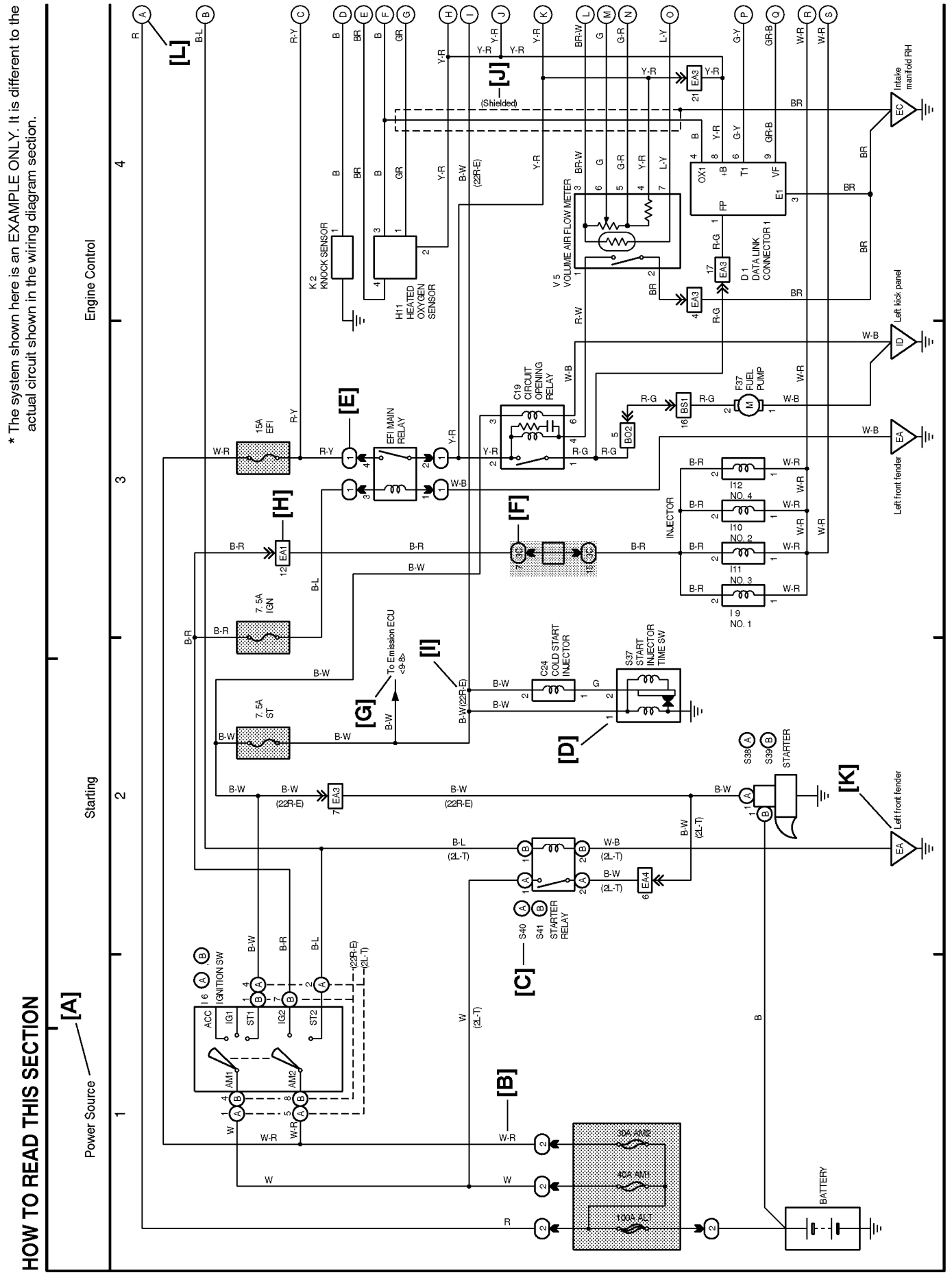

[A] : System Title

[B] : Indicates the wiring color.

Wire colors are indicated by an alphabetical code.

B	= Black	W	= White	BR	= Brown
L	= Blue	V	= Violet	SB	= Sky Blue
R	= Red	O	= Orange	LG	= Light Green
P	= Pink	Y	= Yellow	GR	= Gray
G	= Green				

The first letter indicates the basic wire color and the second letter indicates the color of the stripe.

Example: L - Y

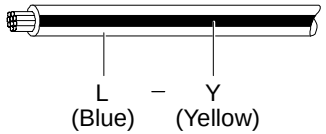

[C] : The position of the parts is the same as shown in the wiring diagram and wire routing.

[D] : Indicates the pin number of the connector. The numbering system is different for female and male connectors.

Example : Numbered in order from upper left to lower right / Numbered in order from upper right to lower left

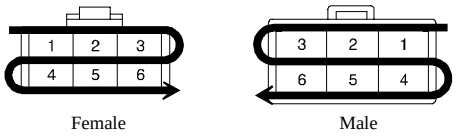

The numbering system for the overall wiring diagram is the same as above

[E] : Indicates a Relay Block. No shading is used and only the Relay Block No. is shown to distinguish it from the J/B.

Example : (1) Indicates Relay Block No.1

[F] : Junction Block (The number in the circle is the J/B No. and the connector code is shown beside it). Junction Blocks are shaded to clearly separate them from other parts.

Example:

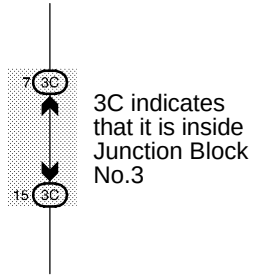

[G] : Indicates related system.

[H] : Indicates the wiring harness and wiring harness connector. The wiring harness with male terminal is shown with arrows (»). Outside numerals are pin numbers.

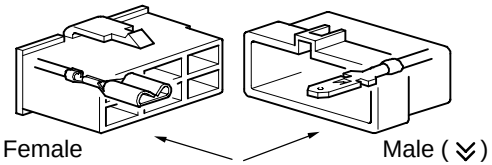

[I] : ( ) is used to indicate different wiring and connector, etc. when the vehicle model, engine type, or specification is different.

[J] : Indicates a shielded cable.



[K] : Indicates and located on ground point.

[L] : The same code occuring on the next page indicates that the wire harness is continuous.

SYSTEM INDEX

SYSTEMS	LOCATION
ABS (w/o Traction Control)	13-2
Air Conditioning (Automatic A/C)	22-2
Air Conditioning (Manual A/C)	23-2
Automatic Glare-Resistant EC Mirror	2-2
Back-Up Light	9-2
Charging	2-1
Cigarette Lighter	17-4
Combination Meter	21-2
Cruise Control	14-2
Electronically Controlled Transmission and A/T Indicator	4-2
Engine Control	3-5
Engine Immobiliser System	3-4
Fog Light	5-4
Garage Door Opener	9-4
Headlight (w/o Daytime Running Light)	5-2
Horn	9-3
Illumination	7-2
Moon Roof	18-3
Multiplex Communication System ∗ Automatic Light Control ∗ Door Lock Control ∗ Headlight (w/ Daytime Running Light) ∗ Interior Light	8-2
∗ Key Reminder and Seat Belt Warning ∗ Light Auto Turn Off ∗ Power Seat (Driver's Seat w/ Driving Position Memory) ∗ Power Window ∗ Remote Control Mirror (w/ Driving Position Memory) ∗ Theft Deterrent ∗ Wireless Door Lock Control	
Power Outlet	17-2
Power Seat (Driver's Seat w/o Driving Position Memory)	16-2
Power Seat (Front Passenger's Seat)	16-4
Power Source	1~23-1
Radiator Fan and Condenser Fan	18-4
Radio and Player (6 Speaker)	20-2
Radio and Player (7 Speaker)	19-2
Rear Window Defogger and Mirror Heater	2-3
Remote Control Mirror (w/o Driving Position Memory)	10-3
Seat Heater	20-4
Shift Lock	12-2
SRS	15-2
Starting and Ignition	1-2
Taillight and Stop Light	6-2
Turn Signal and Hazard Warning Light	12-3
VSC (w/ Traction Control)	11-3
Wiper and Washer	10-2

L PART NUMBER OF CONNECTORS

Code	Part Name	Part Number
A 1	A/C Ambient Temp. Sensor	90980-11070
A 2	A/C Condenser Fan Motor	90980-10928
A 3	A/C Magnetic Clutch and Lock Sensor	90980-11016
A 4	A/C Triple Pressure SW (A/C Dual and Single Pressure SW)	90980-10943
A 5	ABS & BA & TRAC & VSC Actuator	90980-11240
A 6	ABS & BA & TRAC & VSC Actuator	90980-11034
A 7	ABS Actuator and ECU	90080-98191
A 8	ABS Speed Sensor Front LH	90980-11075
A 9	ABS Speed Sensor Front RH	
A10	Air Fuel Ratio Sensor (Bank 1 Sensor 1)	90980-10869
A11	Air Fuel Ratio Sensor (Bank 2 Sensor 1)	
A12	Airbag Sensor Front LH	90980-11898
A13	Airbag Sensor Front RH	90980-11856
A14	A/C Blower Motor Linear Controller	90980-11676
A15	A/C Control Assembly	90980-11390
A16	A/C Control Assembly	90980-11391
A17	A/C Room Temp. Sensor	90980-11918
A18	A/C Solar Sensor	90980-11987
A19	A/C Thermistor	90980-11918
A20	ABS & BA & TRAC & VSC ECU	90080-98201
A21	Active Light Relay	90980-11533
A22	Air Inlet Control Servo Motor	90980-11909
A23	Air Mix Control Servo Motor (Driver Side)	
A24	Air Mix Control Servo Motor (Front Passenger Side)	
A25	Air Outlet Control Servo Motor (Automatic A/C)	
	Air Outlet Control Servo Motor (Manual A/C)	90980-11989
A26	Airbag Squib (Front Passenger Airbag Assembly)	90980-11886
A27	Airbag Squib (Steering Wheel Pad)	90980-10850
A28	Automatic Light Control Sensor	90980-11107
A29	ABS Speed Sensor Rear LH	90980-11060
A30	ABS Speed Sensor Rear RH	
B 1	Brake Fluid Level Warning SW	90980-11207
B 2	Blower Motor	90980-10903
B 3	Blower Resistor	90980-11136
B 4	Body ECU	90980-11058
B 5	Body ECU	90980-11877
B 6	Back-Up Light LH	90980-11148
B 7	Back-Up Light RH	
B 8	Buckle SW LH	90980-11212
B 9	Buckle SW RH	
C 1	Camshaft Position Sensor LH	90980-10947
C 2	Camshaft Position Sensor RH	
C 3	Crankshaft Position Sensor	90980-10947
C 4	Cruise Control Actuator	90980-11150

Code	Part Name	Part Number
C 5	Center Airbag Sensor Assembly	90980-11869
C 6	Center Airbag Sensor Assembly	90980-11872
C 7	Center Airbag Sensor Assembly	90980-11867
C 8	Cigarette Lighter	90980-11606
C 9	Combination Meter	90980-11915
C10	Combination Meter	90980-11913
C11	Combination SW	90980-11533
C12	Combination SW	90980-11616
C13	Combination SW	90980-11672
C14	Combination SW	90980-11594
C15	Cruise Control ECU	90980-11391
D 1	Data Link Connector 1	90980-11195
D 2	Data Link Connector 2	90980-11417
D 3	Data Link Connector 3	90980-11665
D 4	Diode (A/C)	90980-11071
D 5	Diode (A/T Indicator Light 1)	
D 6	Diode (A/T Indicator Light 2)	
D 7	Diode (Luggage Compartment Light)	90980-10962
D 8	Door Control Receiver	90980-11909
D 9	Door Courtesy Light Front LH	90980-10935
D10	Door Courtesy Light Front RH	
D11	Door Courtesy SW Front LH	90980-10871
D12	Door Courtesy SW Front RH	
D13	Door Courtesy SW Rear LH	
D14	Door Courtesy SW Rear RH	
D15	Door Lock Motor Rear LH	90980-11150
D16	Door Lock Motor Rear RH	
D17	Door Lock Motor,Door Key Lock and Unlock SW and Door Unlock Detection SW Front LH	90980-11858
D18	Door Lock Motor,Door Key Lock and Unlock SW and Door Unlock Detection SW Front RH	
D19	Driver Door ECU	90980-11877
E 1	Electronically Controlled Transmission Solenoid	90980-10854
E 2	Engine Coolant Temp. Sensor	90980-10737
E 3	Engine Hood Courtesy SW	90980-11189
E 4	Engine Control Module	90980-11421
E 5	Engine Control Module	90980-11476
E 6	Engine Control Module	90980-11586
E 7	Engine Control Module	90980-11637
E 8	Engine Control Module	90980-11638
F 1	Front Fog Light LH	90980-11660
F 2	Front Fog Light RH	
F 3	Front Turn Signal Light and Parking Light LH	90980-11020
F 4	Front Turn Signal Light and Parking Light RH	

Note: Not all of the above part numbers of the connector are established for the supply.

Code	Part Name	Part Number
F 5	Front Wiper Motor	90980-11599
F 6	Fusible Link Block	99141-14005
F 7	Fusible Link Block	
F 8	Fusible Link Block	99141-14006
F 9	Fusible Link Block	
F10	Fusible Link Block	90980-11881
F11	Field Magnetic Sensor	90980-11909
F12	Front Door Speaker LH	90980-10935
F13	Front Door Speaker RH	
F14	Front Passenger Door ECU	90980-11469
F15	Fuel Pump and Sender	90980-11077
G 1	Generator	90980-11349
G 2	Generator	90980-09213
G 3	Glove Box Light SW	90980-11098
H 1	Headlight High LH	90980-11095
H 2	Headlight High RH	
H 3	Headlight Low LH	90980-11660
H 4	Headlight Low RH	
H 5	Horn LH	90980-10619
H 6	Horn RH	
H 7	Hazard SW	90980-10801
H 8	Heated Oxygen Sensor (Bank 1 Sensor 2)	90980-11028
H 9	Heater Control SW	90980-11913
H10	Heater Control SW	90980-10877
H11	High Mounted Stop Light	90980-11148
I 1	Idle Air Control Valve	90980-11145
I 2	Ignition Coil and Igniter No.1	90980-11885
I 3	Ignition Coil and Igniter No.2	
I 4	Ignition Coil and Igniter No.3	
I 5	Ignition Coil and Igniter No.4	
I 6	Ignition Coil and Igniter No.5	
I 7	Ignition Coil and Igniter No.6	
I 8	Injector No.1	90980-11153
I 9	Injector No.2	
I10	Injector No.3	
I11	Injector No.4	
I12	Injector No.5	
I13	Injector No.6	
I14	Ignition Key Cylinder Light	90980-10906
I15	Ignition SW	90980-11615
I16	Inner Mirror	90980-12039
I17	Interior Light	90980-10121

Code	Part Name	Part Number
J 1	Junction Connector	90980-11542
J 2	Junction Connector	
J 3	Junction Connector	
J 4	Junction Connector	
J 5	Junction Connector	
J 6	Junction Connector	
J 7	Junction Connector	
J 8	Junction Connector	
J 9	Junction Connector	90980-10976
J10	Junction Connector	
J11	Junction Connector	
J12	Junction Connector	90980-11542
J13	Junction Connector	90980-10799
J14	Junction Connector	90980-11542
K 1	Knock Sensor 1	90980-11166
K 2	Knock Sensor 2	
K 3	Key Interlock Solenoid	90980-10825
L 1	Luggage Compartment Door Opener Main SW	
L 2	Luggage Compartment Door Opener SW	
L 3	License Plate Light LH	90980-11148
L 4	License Plate Light RH	
L 5	Light Failure Sensor	90980-10803
L 6	Luggage Compartment Door Key Unlock SW	90980-11212
L 7	Luggage Compartment Door Unlock Motor	90980-11315
L 8	Luggage Compartment Light	90980-11148
L 9	Luggage Compartment Light SW	90980-11097
L10	Lumbar Support Control Motor (Driver's Seat)	90980-10935
L11	Lumbar Support Control SW (Driver's Seat)	90980-10601
M 1	Mass Air Flow Meter	90980-11317
M 2	Masster Cylinder Pressure Sensor	90080-98200
M 3	Multi Display	90980-11915
M 4	Multi Display	90980-11913
M 5	Multi Display	90980-11971
M 6	Multi Display	90980-11116
M 7	Multi Display	90980-11113
M 8	Moon Roof Control ECU	90980-10997
M 9	Moon Roof Control SW	90980-10908
N 1	Noise Filter (Ignition)	90980-10843
N 2	Noise Filter (Rear Window Defogger)	90980-11259

L PART NUMBER OF CONNECTORS

Code	Part Name	Part Number
N 3	Noise Filter (Stop Light and Luggage Compartment Light)	90980-10860
O 1	O/D Direct Clutch Speed Sensor	90980-11156
O 2	Oil Pressure SW	90980-11363
O 3	O/D Main SW (Floor Shift)	90980-10795
	O/D Main SW (Column Shift)	990980-11471
P 1	Park/Neutral Position SW,A/T Indicator Light SW and Back-Up Light SW	90980-11332
P 2	Power Steering Oil Pressure SW	90980-11428
P 3	Parking Brake SW	90980-10871
P 4	Power Outlet	90980-10860
P 5	Power Outlet	90980-10760
P 6	Power Outlet	90980-10601
P 7	Power Outlet	
P 8	Power Outlet Main SW	90980-10797
P 9	Personal Light	90980-10908
P10	Power Window Control SW Rear LH	90980-10797
P11	Power Window Control SW Rear RH	
P12	Power Window Motor Front LH	90980-11011
P13	Power Window Motor Front RH	90980-10860
P14	Power Window Motor Rear LH	
P15	Power Window Motor Rear RH	
P16	Pretensioner LH	90980-11862
P17	Pretensioner RH	
P18	Power Seat Control SW (Driver's Seat)	90980-10997
P19	Power Seat Control SW (Front Passenger's Seat)	
P20	Power Seat ECU	90980-11527
P21	Power Seat ECU	90980-11877
P22	Power Seat Motor (Driver's Seat Front Vertical Control)	90980-10825
P23	Power Seat Motor (Driver's Seat Rear Vertical Control)	
P24	Power Seat Motor (Driver's Seat Reclining Control)	
P25	Power Seat Motor (Driver's Seat Slide Control)	
P26	Power Seat Motor (Front Passenger's Seat Rear Vertical Control)	
P27	Power Seat Motor (Front Passenger's Seat Reclining Control)	
P28	Power Seat Motor (Front Passenger's Seat Slide Control)	
P29	Power Seat Position Sensor (Driver's Seat Front Vertical Control)	90980-11296
P30	Power Seat Position Sensor (Driver's Seat Rear Vertical Control)	90980-10908
P31	Power Seat Position Sensor (Driver's Seat Reclining Control)	90980-10908
P32	Power Seat Position Sensor (Driver's Seat Slide Control)	

Code	Part Name	Part Number
R 1	Radiator Fan Motor	90980-10928
R 2	Radio and Player	90980-11971
R 3	Radio and Player	90980-10997
R 4	Radio and Player	90980-10996
R 5	Remote Control Mirror SW	90980-11657
R 6	Rheostat	90980-10908
R 7	Rear Combination Light LH	90980-11587
R 8	Rear Combination Light RH	
R 9	Rear Door Speaker LH	90980-10935
R10	Rear Door Speaker RH	
R11	Rear Interior Light LH	
R12	Rear Interior Light RH	
R13	Remote Control Mirror LH (w/ Driving Position Memory)	90980-11580
	Remote Control Mirror LH (w/o Driving Position Memory and w/ Mirror Heater)	90980-11487
	Remote Control Mirror LH (w/o Driving Position Memory and w/o Mirror Heater)	90980-11470
	Remote Control Mirror LH (Taiwan)	90980-12059
R14	Remote Control Mirror RH (w/ Driving Position Memory)	90980-11580
	Remote Control Mirror RH (w/o Driving Position Memory and w/ Mirror Heater)	90980-11487
	Remote Control Mirror RH (w/o Driving Position Memory and w/o Mirror Heater)	90980-11470
	Remote Control Mirror RH (Taiwan)	90980-12059
S 1	Starter	90980-11400
S 2	Starter	90980-09689
S 3	Shift Lock ECU (Floor Shift)	90980-11319
	Shift Lock ECU (Column Shift)	90980-11488
S 4	Stop Light SW	90980-11118
S 5	Side Airbag Sensor LH	90980-11857
S 6	Side Airbag Sensor RH	
S 7	Side Airbag Squib LH	90980-11864
S 8	Side Airbag Squib RH	
S 9	Stereo Component Amplifier	90980-10807
S10	Stereo Component Amplifier	90980-10848
S11	Seat Belt Warning Occupant Detection Sensor	90980-10860
S12	Seat Heater (Driver's Seat)	90980-10860
S13	Seat Heater (Front Passenger's Seat)	
S14	Seat Memory SW	90980-11013
T 1	Theft Deterrent Buzzer	90980-11051
T 2	Theft Deterrent Horn	90980-10619
T 3	Throttle Position Sensor	90980-11261
T 4	Theft Deterrent ECU	90980-11423
T 5	Translate ECU	90980-11390
T 6	Transponder Key Amplifier	90980-10789

Note: Not all of the above part numbers of the connector are established for the supply.

Code	Part Name	Part Number
T 7	Turn Signal Flasher Relay	82751-07010
T 8	Tweeter LH	90980-10825
T 9	Tweeter RH	
U 1	Unlock Warning SW	90980-10860
V 1	VSV (ACIS No.1)	90980-11149
V 2	VSV (ACIS No.2)	
V 3	VSV (ACM)	90980-11156
V 4	VSV (Canister Closed Valve)	90980-11162
V 5	VSV (EVAP)	90980-11156
V 6	VVT Solenoid LH	90980-11162
V 7	VVT Solenoid RH	
V 8	VSC Off SW	90980-11013
V 9	VSC Warning Buzzer	90980-10906

Code	Part Name	Part Number
V10	Vanity Light LH and Garage Door Opener	90980-10621
V11	Vanity Light RH	
V12	Vapor Pressure Sensor	90980-11860
V13	Voltage Inverter	90980-10799
V14	VSV (Pressure Switching Valve)	90980-11859
W 1	Washer Level Warning SW	90980-11068
W 2	Washer Motor	90980-10981
W 3	Water Temp. Sender	90980-11428
W 4	Water Temp. SW No.1	90980-11235
W 5	Water Temp. SW No.2	90980-11243
W 6	Wireless Door Lock Buzzer	90980-11142
W 7	Woofer	90980-10935
Y 1	Yaw Rate Sensor	90080-98199

L PART NUMBER OF CONNECTORS

Code	Part Name	Part Number
A 1	A/C Ambient Temp. Sensor	90980-11070
A 2	A/C Condenser Fan Motor	90980-10928
A 3	A/C Magnetic Clutch and Lock Sensor	90980-11016
A 4	A/C Triple Pressure SW (A/C Dual and Single Pressure SW)	90980-10943
A 5	ABS & BA & TRAC & VSC Actuator	90980-11240
A 6	ABS & BA & TRAC & VSC Actuator	90980-11034
A 7	ABS Actuator and ECU	90080-98191
A 8	ABS Speed Sensor Front LH	90980-11075
A 9	ABS Speed Sensor Front RH	
A10	Air Fuel Ratio Sensor (Bank 1 Sensor 1)	90980-10869
A11	Air Fuel Ratio Sensor (Bank 2 Sensor 1)	
A12	Airbag Sensor Front LH	90980-11898
A13	Airbag Sensor Front RH	90980-11856
A14	A/C Blower Motor Linear Controller	90980-11676
A15	A/C Control Assembly	90980-11390
A16	A/C Control Assembly	90980-11391
A17	A/C Room Temp. Sensor	90980-11918
A18	A/C Solar Sensor	90980-11987
A19	A/C Thermistor	90980-11918
A20	ABS & BA & TRAC & VSC ECU	90080-98201
A21	Active Light Relay	90980-11533
A22	Air Inlet Control Servo Motor	90980-11909
A23	Air Mix Control Servo Motor (Driver Side)	
A24	Air Mix Control Servo Motor (Front Passenger Side)	
A25	Air Outlet Control Servo Motor (Automatic A/C)	
	Air Outlet Control Servo Motor (Manual A/C)	90980-11989
A26	Airbag Squib (Front Passenger Airbag Assembly)	90980-11886
A27	Airbag Squib (Steering Wheel Pad)	90980-10850
A28	Automatic Light Control Sensor	90980-11107
A29	ABS Speed Sensor Rear LH	90980-11060
A30	ABS Speed Sensor Rear RH	
B 1	Brake Fluid Level Warning SW	90980-11207
B 2	Blower Motor	90980-10903
B 3	Blower Resistor	90980-11136
B 4	Body ECU	90980-11058
B 5	Body ECU	90980-11877
B 6	Back-Up Light LH	90980-11148
B 7	Back-Up Light RH	
B 8	Buckle SW LH	90980-11212
B 9	Buckle SW RH	
C 1	Camshaft Position Sensor LH	90980-10947
C 2	Camshaft Position Sensor RH	
C 3	Crankshaft Position Sensor	90980-10947
C 4	Cruise Control Actuator	90980-11150

Code	Part Name	Part Number
C 5	Center Airbag Sensor Assembly	90980-11869
C 6	Center Airbag Sensor Assembly	90980-11872
C 7	Center Airbag Sensor Assembly	90980-11867
C 8	Cigarette Lighter	90980-11606
C 9	Combination Meter	90980-11915
C10	Combination Meter	90980-11913
C11	Combination SW	90980-11533
C12	Combination SW	90980-11616
C13	Combination SW	90980-11672
C14	Combination SW	90980-11594
C15	Cruise Control ECU	90980-11391
D 1	Data Link Connector 1	90980-11195
D 2	Data Link Connector 2	90980-11417
D 3	Data Link Connector 3	90980-11665
D 4	Diode (A/C)	90980-11071
D 5	Diode (A/T Indicator Light 1)	
D 6	Diode (A/T Indicator Light 2)	
D 7	Diode (Luggage Compartment Light)	90980-10962
D 8	Door Control Receiver	90980-11909
D 9	Door Courtesy Light Front LH	90980-10935
D10	Door Courtesy Light Front RH	
D11	Door Courtesy SW Front LH	90980-10871
D12	Door Courtesy SW Front RH	
D13	Door Courtesy SW Rear LH	
D14	Door Courtesy SW Rear RH	
D15	Door Lock Motor Rear LH	90980-11150
D16	Door Lock Motor Rear RH	
D17	Door Lock Motor,Door Key Lock and Unlock SW and Door Unlock Detection SW Front LH	90980-11858
D18	Door Lock Motor,Door Key Lock and Unlock SW and Door Unlock Detection SW Front RH	
D19	Driver Door ECU	90980-11877
E 1	Electronically Controlled Transmission Solenoid	90980-10854
E 2	Engine Coolant Temp. Sensor	90980-10737
E 3	Engine Hood Courtesy SW	90980-11189
E 4	Engine Control Module	90980-11421
E 5	Engine Control Module	90980-11476
E 6	Engine Control Module	90980-11586
E 7	Engine Control Module	90980-11637
E 8	Engine Control Module	90980-11638
F 1	Front Fog Light LH	90980-11660
F 2	Front Fog Light RH	
F 3	Front Turn Signal Light and Parking Light LH	90980-11020
F 4	Front Turn Signal Light and Parking Light RH	

Note: Not all of the above part numbers of the connector are established for the supply.

Code	Part Name	Part Number
F 5	Front Wiper Motor	90980-11599
F 6	Fusible Link Block	99141-14005
F 7	Fusible Link Block	
F 8	Fusible Link Block	99141-14006
F 9	Fusible Link Block	
F10	Fusible Link Block	90980-11881
F11	Field Magnetic Sensor	90980-11909
F12	Front Door Speaker LH	90980-10935
F13	Front Door Speaker RH	
F14	Front Passenger Door ECU	90980-11469
F15	Fuel Pump and Sender	90980-11077
G 1	Generator	90980-11349
G 2	Generator	90980-09213
G 3	Glove Box Light SW	90980-11098
H 1	Headlight High LH	90980-11095
H 2	Headlight High RH	
H 3	Headlight Low LH	90980-11660
H 4	Headlight Low RH	
H 5	Horn LH	90980-10619
H 6	Horn RH	
H 7	Hazard SW	90980-10801
H 8	Heated Oxygen Sensor (Bank 1 Sensor 2)	90980-11028
H 9	Heater Control SW	90980-11913
H10	Heater Control SW	90980-10877
H11	High Mounted Stop Light	90980-11148
I 1	Idle Air Control Valve	90980-11145
I 2	Ignition Coil and Igniter No.1	90980-11885
I 3	Ignition Coil and Igniter No.2	
I 4	Ignition Coil and Igniter No.3	
I 5	Ignition Coil and Igniter No.4	
I 6	Ignition Coil and Igniter No.5	
I 7	Ignition Coil and Igniter No.6	
I 8	Injector No.1	90980-11153
I 9	Injector No.2	
I10	Injector No.3	
I11	Injector No.4	
I12	Injector No.5	
I13	Injector No.6	
I14	Ignition Key Cylinder Light	90980-10906
I15	Ignition SW	90980-11615
I16	Inner Mirror	90980-12039
I17	Interior Light	90980-10121

Code	Part Name	Part Number
J 1	Junction Connector	90980-11542
J 2	Junction Connector	
J 3	Junction Connector	
J 4	Junction Connector	
J 5	Junction Connector	
J 6	Junction Connector	
J 7	Junction Connector	
J 8	Junction Connector	
J 9	Junction Connector	90980-10976
J10	Junction Connector	
J11	Junction Connector	
J12	Junction Connector	90980-11542
J13	Junction Connector	90980-10799
J14	Junction Connector	90980-11542
K 1	Knock Sensor 1	90980-11166
K 2	Knock Sensor 2	
K 3	Key Interlock Solenoid	90980-10825
L 1	Luggage Compartment Door Opener Main SW	
L 2	Luggage Compartment Door Opener SW	
L 3	License Plate Light LH	90980-11148
L 4	License Plate Light RH	
L 5	Light Failure Sensor	90980-10803
L 6	Luggage Compartment Door Key Unlock SW	90980-11212
L 7	Luggage Compartment Door Unlock Motor	90980-11315
L 8	Luggage Compartment Light	90980-11148
L 9	Luggage Compartment Light SW	90980-11097
L10	Lumbar Support Control Motor (Driver's Seat)	90980-10935
L11	Lumbar Support Control SW (Driver's Seat)	90980-10601
M 1	Mass Air Flow Meter	90980-11317
M 2	Masster Cylinder Pressure Sensor	90080-98200
M 3	Multi Display	90980-11915
M 4	Multi Display	90980-11913
M 5	Multi Display	90980-11971
M 6	Multi Display	90980-11116
M 7	Multi Display	90980-11113
M 8	Moon Roof Control ECU	90980-10997
M 9	Moon Roof Control SW	90980-10908
N 1	Noise Filter (Ignition)	90980-10843
N 2	Noise Filter (Rear Window Defogger)	90980-11259

L PART NUMBER OF CONNECTORS

Code	Part Name	Part Number
N 3	Noise Filter (Stop Light and Luggage Compartment Light)	90980-10860
O 1	O/D Direct Clutch Speed Sensor	90980-11156
O 2	Oil Pressure SW	90980-11363
O 3	O/D Main SW (Floor Shift)	90980-10795
	O/D Main SW (Column Shift)	990980-11471
P 1	Park/Neutral Position SW,A/T Indicator Light SW and Back-Up Light SW	90980-11332
P 2	Power Steering Oil Pressure SW	90980-11428
P 3	Parking Brake SW	90980-10871
P 4	Power Outlet	90980-10860
P 5	Power Outlet	90980-10760
P 6	Power Outlet	90980-10601
P 7	Power Outlet	
P 8	Power Outlet Main SW	90980-10797
P 9	Personal Light	90980-10908
P10	Power Window Control SW Rear LH	90980-10797
P11	Power Window Control SW Rear RH	
P12	Power Window Motor Front LH	90980-11011
P13	Power Window Motor Front RH	90980-10860
P14	Power Window Motor Rear LH	
P15	Power Window Motor Rear RH	
P16	Pretensioner LH	90980-11862
P17	Pretensioner RH	
P18	Power Seat Control SW (Driver's Seat)	90980-10997
P19	Power Seat Control SW (Front Passenger's Seat)	
P20	Power Seat ECU	90980-11527
P21	Power Seat ECU	90980-11877
P22	Power Seat Motor (Driver's Seat Front Vertical Control)	90980-10825
P23	Power Seat Motor (Driver's Seat Rear Vertical Control)	
P24	Power Seat Motor (Driver's Seat Reclining Control)	
P25	Power Seat Motor (Driver's Seat Slide Control)	
P26	Power Seat Motor (Front Passenger's Seat Rear Vertical Control)	
P27	Power Seat Motor (Front Passenger's Seat Reclining Control)	
P28	Power Seat Motor (Front Passenger's Seat Slide Control)	
P29	Power Seat Position Sensor (Driver's Seat Front Vertical Control)	90980-11296
P30	Power Seat Position Sensor (Driver's Seat Rear Vertical Control)	90980-10908
P31	Power Seat Position Sensor (Driver's Seat Reclining Control)	90980-10908
P32	Power Seat Position Sensor (Driver's Seat Slide Control)	

Code	Part Name	Part Number
R 1	Radiator Fan Motor	90980-10928
R 2	Radio and Player	90980-11971
R 3	Radio and Player	90980-10997
R 4	Radio and Player	90980-10996
R 5	Remote Control Mirror SW	90980-11657
R 6	Rheostat	90980-10908
R 7	Rear Combination Light LH	90980-11587
R 8	Rear Combination Light RH	
R 9	Rear Door Speaker LH	90980-10935
R10	Rear Door Speaker RH	
R11	Rear Interior Light LH	
R12	Rear Interior Light RH	
R13	Remote Control Mirror LH (w/ Driving Position Memory)	90980-11580
	Remote Control Mirror LH (w/o Driving Position Memory and w/ Mirror Heater)	90980-11487
	Remote Control Mirror LH (w/o Driving Position Memory and w/o Mirror Heater)	90980-11470
	Remote Control Mirror LH (Taiwan)	90980-12059
R14	Remote Control Mirror RH (w/ Driving Position Memory)	90980-11580
	Remote Control Mirror RH (w/o Driving Position Memory and w/ Mirror Heater)	90980-11487
	Remote Control Mirror RH (w/o Driving Position Memory and w/o Mirror Heater)	90980-11470
	Remote Control Mirror RH (Taiwan)	90980-12059
S 1	Starter	90980-11400
S 2	Starter	90980-09689
S 3	Shift Lock ECU (Floor Shift)	90980-11319
	Shift Lock ECU (Column Shift)	90980-11488
S 4	Stop Light SW	90980-11118
S 5	Side Airbag Sensor LH	90980-11857
S 6	Side Airbag Sensor RH	
S 7	Side Airbag Squib LH	90980-11864
S 8	Side Airbag Squib RH	
S 9	Stereo Component Amplifier	90980-10807
S10	Stereo Component Amplifier	90980-10848
S11	Seat Belt Warning Occupant Detection Sensor	90980-10860
S12	Seat Heater (Driver's Seat)	90980-10860
S13	Seat Heater (Front Passenger's Seat)	
S14	Seat Memory SW	90980-11013
T 1	Theft Deterrent Buzzer	90980-11051
T 2	Theft Deterrent Horn	90980-10619
T 3	Throttle Position Sensor	90980-11261
T 4	Theft Deterrent ECU	90980-11423
T 5	Translate ECU	90980-11390
T 6	Transponder Key Amplifier	90980-10789

Note: Not all of the above part numbers of the connector are established for the supply.

Code	Part Name	Part Number
T 7	Turn Signal Flasher Relay	82751-07010
T 8	Tweeter LH	90980-10825
T 9	Tweeter RH	
U 1	Unlock Warning SW	90980-10860
V 1	VSV (ACIS No.1)	90980-11149
V 2	VSV (ACIS No.2)	
V 3	VSV (ACM)	90980-11156
V 4	VSV (Canister Closed Valve)	90980-11162
V 5	VSV (EVAP)	90980-11156
V 6	VVT Solenoid LH	90980-11162
V 7	VVT Solenoid RH	
V 8	VSC Off SW	90980-11013
V 9	VSC Warning Buzzer	90980-10906

Code	Part Name	Part Number
V10	Vanity Light LH and Garage Door Opener	90980-10621
V11	Vanity Light RH	
V12	Vapor Pressure Sensor	90980-11860
V13	Voltage Inverter	90980-10799
V14	VSV (Pressure Switching Valve)	90980-11859
W 1	Washer Level Warning SW	90980-11068
W 2	Washer Motor	90980-10981
W 3	Water Temp. Sender	90980-11428
W 4	Water Temp. SW No.1	90980-11235
W 5	Water Temp. SW No.2	90980-11243
W 6	Wireless Door Lock Buzzer	90980-11142
W 7	Woofer	90980-10935
Y 1	Yaw Rate Sensor	90080-98199

J POWER SOURCE (Current Flow Chart)

The chart below shows the route by which current flows from the battery to each electrical source (Fusible Link, Circuit Breaker, Fuse, etc.) and other parts.

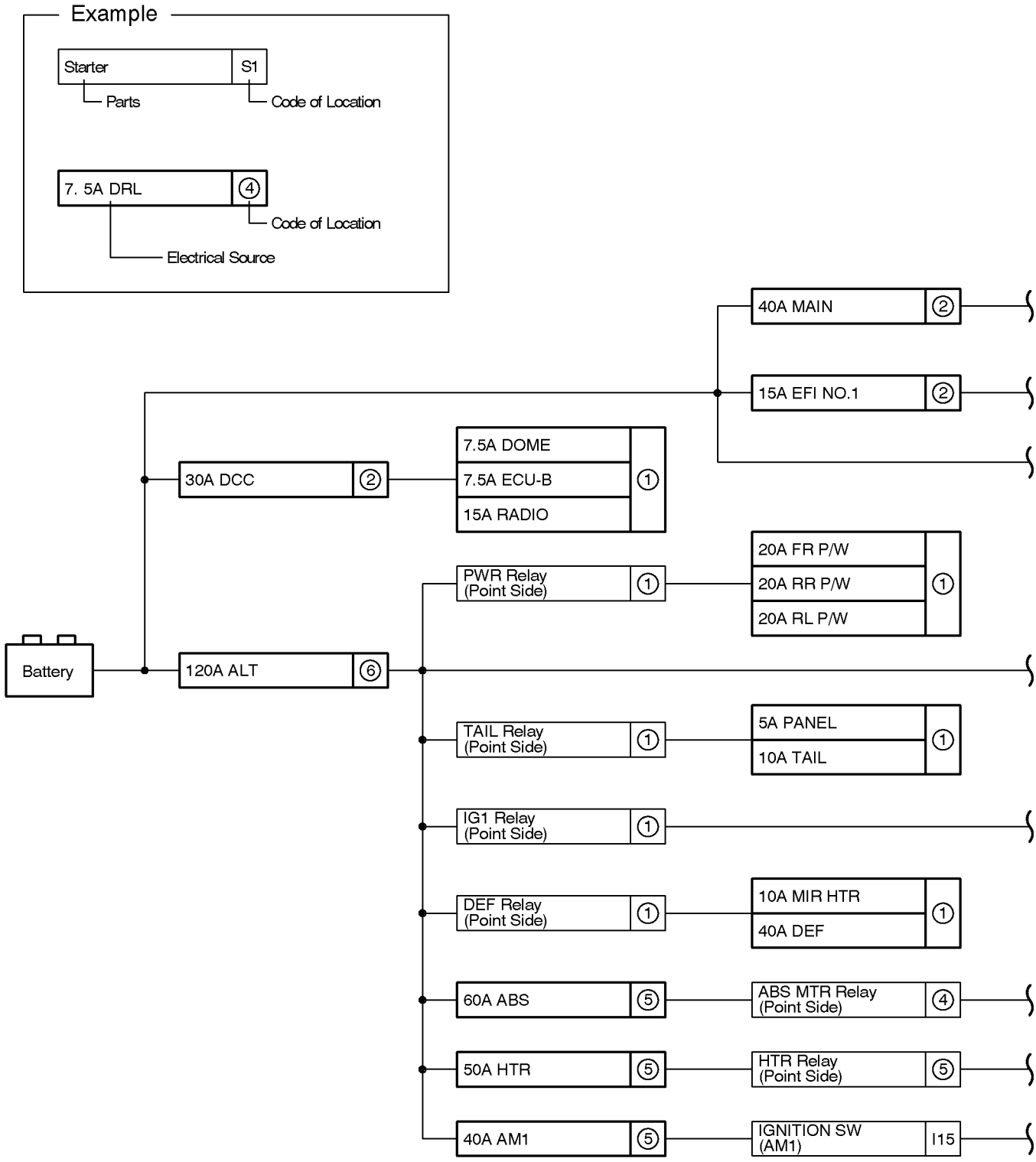

[LOCATION]

① : Driver Side J/B (See Page 26)
② : Engine Room J/B (See Page 30)
③ : Engine Room R/B No.2 (See Page 24)
④ : Engine Room R/B No.3 (See Page 24)
⑤ : Engine Room R/B No.5 (See Page 25)
⑥ : Fusible Link Block (F6,F7,F8,F9,F10 on See Page 44)

*1 : w/ Daytime Running Light
*2 : w/o Daytime Running Lght

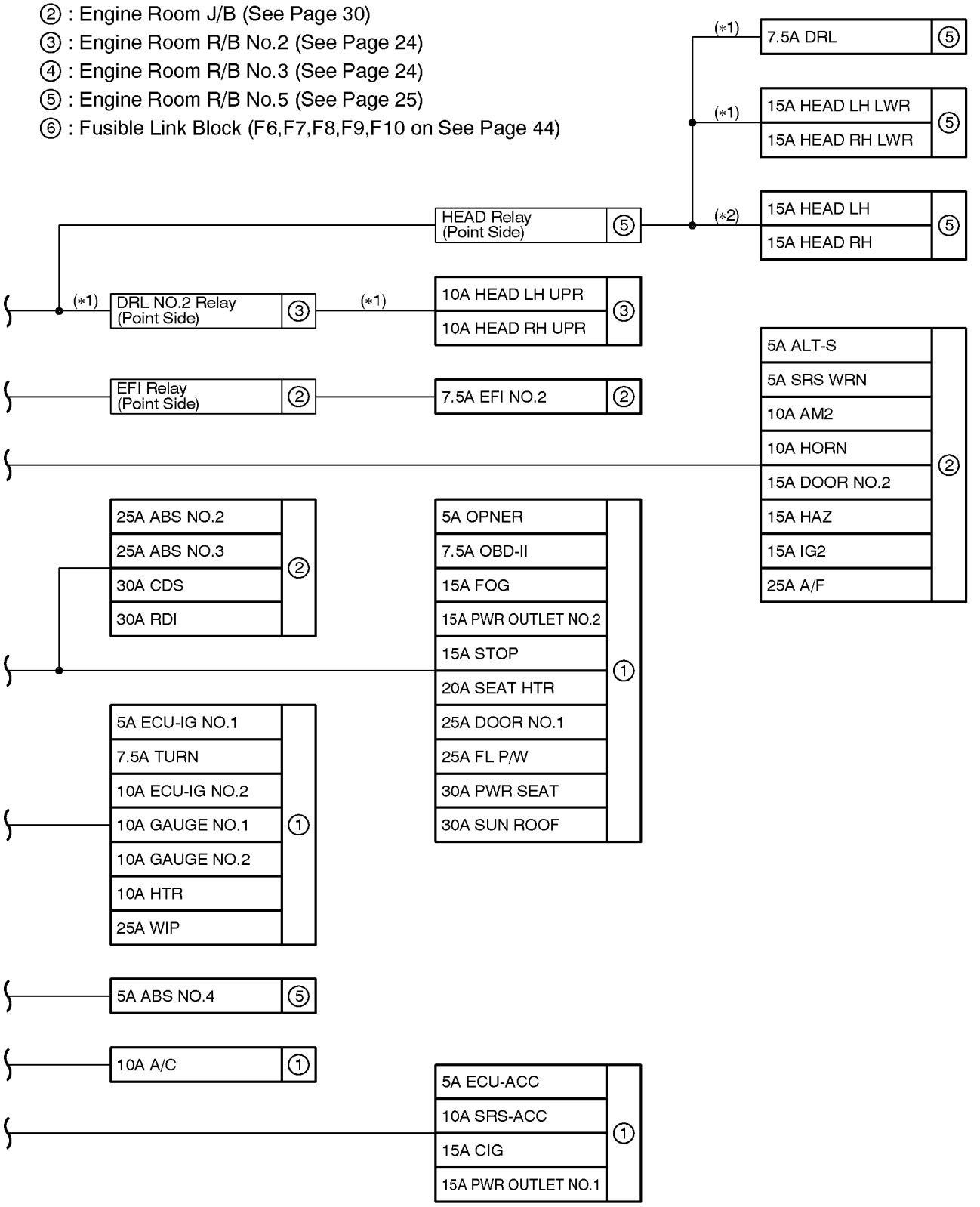

Driver Side J/B (See Page 26)

Fuse		System	Page
5A	ECU-ACC	ABS (w/o Traction Control)	200
		Back-Up Light	152
		Cruise Control	210
		Electronically Controlled Transmission and A/T Indicator	216
		Multiplex Communication System	108
		Radio and Player (6 Speaker)	254
		Radio and Player (7 Speaker)	250
		Remote Control Mirror (w/o Driving Position Memory)	246
		Shift Lock	222
		VSC (w/ Traction Control)	190
5A	ECU-IG NO.1	Charging	80
		Radiator Fan and Condenser Fan	266
5A	PANEL	Combination Meter	256
		Illumination	142
7.5A	DOME	Combination Meter	256
		Garage Door Opener	238
		Interior Light	136
		Wireless Door Lock Control	178
7.5A	ECU-B	Air Conditioning (Automatic A/C)	268
		Air Conditioning (Manual A/C)	276
		Automatic Light Control	130
		Combination Meter	256
		Door Lock Control	172
		Headlight (w/ Daytime Running Light)	98
		Interior Light	136
		Key Reminder and Seat Belt Warning	154
		Light Auto Turn Off	132
		Multiplex Communication System	108
		Power Seat (w/ Driving Position Memory)	224
		Power Window	166
		Remote Control Mirror (w/ Driving Position Memory)	242
		Theft Deterrent	184
		Wireless Door Lock Control	178
7.5A	OBD-II	Engine Control	82
7.5A	TURN	Turn Signal and Hazard Warning Light	146
10A	A/C	Air Conditioning (Manual A/C)	276
10A	ECU-IG NO.2	Combination Meter	256
		Cruise Control	210
		Door Lock Control	172
		Electronically Controlled Transmission and A/T Indicator	216
		Interior Light	136
		Key Reminder and Seat Belt Warning	154

* These are the page numbers of the first page on which the related system is shown.

Fuse		System	Page
10A	ECU-IG NO.2	Multiplex Communication System	108
		Theft Deterrent	184
		VSC (w/ Traction Control)	190
		Wireless Door Lock Control	178
10A	GAUGE NO.1	ABS (w/o Traction Control)	200
		Automatic Glare-Resistant EC Mirror	240
		Combination Meter	256
		Cruise Control	210
		Engine Control	82
		Key Reminder and Seat Belt Warning	154
		Moon Roof	236
		Multiplex Communication System	108
		Power Outlet	162
		Power Seat (w/ Driving Position Memory)	224
		Power Window	166
		Rear Window Defogger and Mirror Heater	248
		Remote Control Mirror (w/ Driving Position Memory)	242
		Shift Lock	222
		Taillight and Stop Light	148
		VSC (w/ Traction Control)	190
10A	GAUGE NO.2	ABS (w/o Traction Control)	200
		Back-Up Light	152
		Cruise Control	210
		Electronically Controlled Transmission and A/T Indicator	216
		VSC (w/ Traction Control)	190
10A	HTR	Air Conditioning (Automatic A/C)	268
		Air Conditioning (Manual A/C)	276
10A	MIR HTR	Engine Control	82
		Rear Window Defogger and Mirror Heater	248
10A	SRS-ACC	SRS	205
10A	TAIL	Engine Control	82
		Taillight and Stop Light	148
15A	CIG	Cigarette Lighter	160
15A	ECU-IG NO.2	ABS (w/o Traction Control)	200
15A	FOG	Fog Light	104
15A	PWR OUTLET NO.1	Power Outlet	162
15A	PWR OUTLET NO.2	Power Outlet	162
15A	RADIO	Combination Meter	256
		Radio and Player (6 Speaker)	254
		Radio and Player (7 Speaker)	250
15A	STOP	ABS (w/o Traction Control)	200
		Cruise Control	210
		Electronically Controlled Transmission and A/T Indicator	216

* These are the page numbers of the first page on which the related system is shown.

J POWER SOURCE (Current Flow Chart)

Fuse		System	Page
15A	STOP	Engine Control	82
		Shift Lock	222
		Taillight and Stop Light	148
		VSC (w/ Traction Control)	190
20A	FR P/W	Multiplex Communication System	108
		Power Window	166
20A	RL P/W	Multiplex Communication System	108
		Power Window	166
20A	RR P/W	Multiplex Communication System	108
		Power Window	166
20A	SEAT HEATER	Seat Heater	234
25A	DOOR NO.1	Door Lock Control	172
		Interior Light	136
		Multiplex Communication System	108
		Theft Deterrent	184
		Wireless Door Lock Control	178
25A	FL P/W	Multiplex Communication System	108
		Power Window	166
25A	WIP	Wiper and Washer	158
30A	PWR SEAT	Multiplex Communication System	108
		Power Seat (w/ Driving Position Memory)	224
		Power Seat (w/o Driving Position Memory)	230
		Remote Control Mirror (w/ Driving Position Memory)	242
30A	SUN ROOF	Moon Roof	236
40A	DEF	Rear Window Defogger and Mirror Heater	248

Engine Room J/B (See Page 30)

Fuse		System	Page
5A	ALT-S	Charging	80
5A	SRS WRN	Combination Meter	256
		SRS	205
7.5A	EFI NO.2	Electronically Controlled Transmission and A/T Indicator	216
		Engine Control	82
		Engine Immobiliser System	94
10A	AM2	Charging	80
		Combination Meter	256
		Electronically Controlled Transmission and A/T Indicator	216
		Engine Control	82
		Engine Immobiliser System	94
		SRS	205
		Starting and Ignition	76
10A	HORN	Horn	164
		Multiplex Communication System	108
		Theft Deterrent	184

* These are the page numbers of the first page on which the related system is shown.

Fuse		System	Page
15A	DOOR NO.2	Door Lock Control Interior Light Multiplex Communication System Wireless Door Lock Control	172 136 108 178
15A	EFI NO.1	Electronically Controlled Transmission and A/T Indicator Engine Control Engine Immobiliser System	216 82 94
15A	HAZ	Turn Signal and Hazard Warning Light	146
15A	IG2	Combination Meter Engine Control Starting and Ignition	256 82 76
25A	A/F	Engine Control	82
25A	ABS NO.2	VSC (w/ Traction Control)	190
25A	ABS NO.3	VSC (w/ Traction Control)	190
30A	CDS	Radiator Fan and Condenser Fan	266
30A	RDI	Radiator Fan and Condenser Fan	266
40A	MAIN	Automatic Light Control Headlight (w/ Daytime Running Light) Headlight (w/o Daytime Running Light) Light Auto Turn Off Multiplex Communication System Starting and Ignition	130 98 102 132 108 76

Engine Room R/B No.2 (See Page 24)

Fuse		System	Page
10A	HEAD LH UPR	Headlight (w/ Daytime Running Light) Multiplex Communication System	98 108
10A	HEAD RH UPR	Headlight (w/ Daytime Running Light) Multiplex Communication System	98 108

Engine Room R/B No.5 (See Page 25)

Fuse		System	Page
5A	ABS NO.4	VSC (w/ Traction Control)	190
7.5A	DRL	Headlight (w/ Daytime Running Light) Multiplex Communication System	98 108
15A	HEAD LH	Fog Light Headlight (w/o Daytime Running Light)	104 102
15A	HEAD LH LWR	Fog Light Headlight (w/ Daytime Running Light) Multiplex Communication System	104 98 108
15A	HEAD RH	Combination Meter Headlight (w/o Daytime Running Light)	256 102
15A	HEAD RH LWR	Headlight (w/ Daytime Running Light) Multiplex Communication System	98 108

* These are the page numbers of the first page on which the related system is shown.

J POWER SOURCE (Current Flow Chart)

Fuse		System	Page
50A	HTR	Air Conditioning (Automatic A/C)	268
		Air Conditioning (Manual A/C)	276
60A	ABS	ABS (w/o Traction Control)	200
		VSC (w/ Traction Control)	190

Fusible Link Block (See Page 23)

Fuse		System	Page
120A	ALT	Automatic Light Control	130
		Charging	80
		Illumination	142
		Light Auto Turn Off	132
		Power Window	166
		Rear Window Defogger and Mirror Heater	248
		Taillight and Stop Light	148

* These are the page numbers of the first page on which the related system is shown.

F RELAY LOCATIONS

[Engine Compartment]

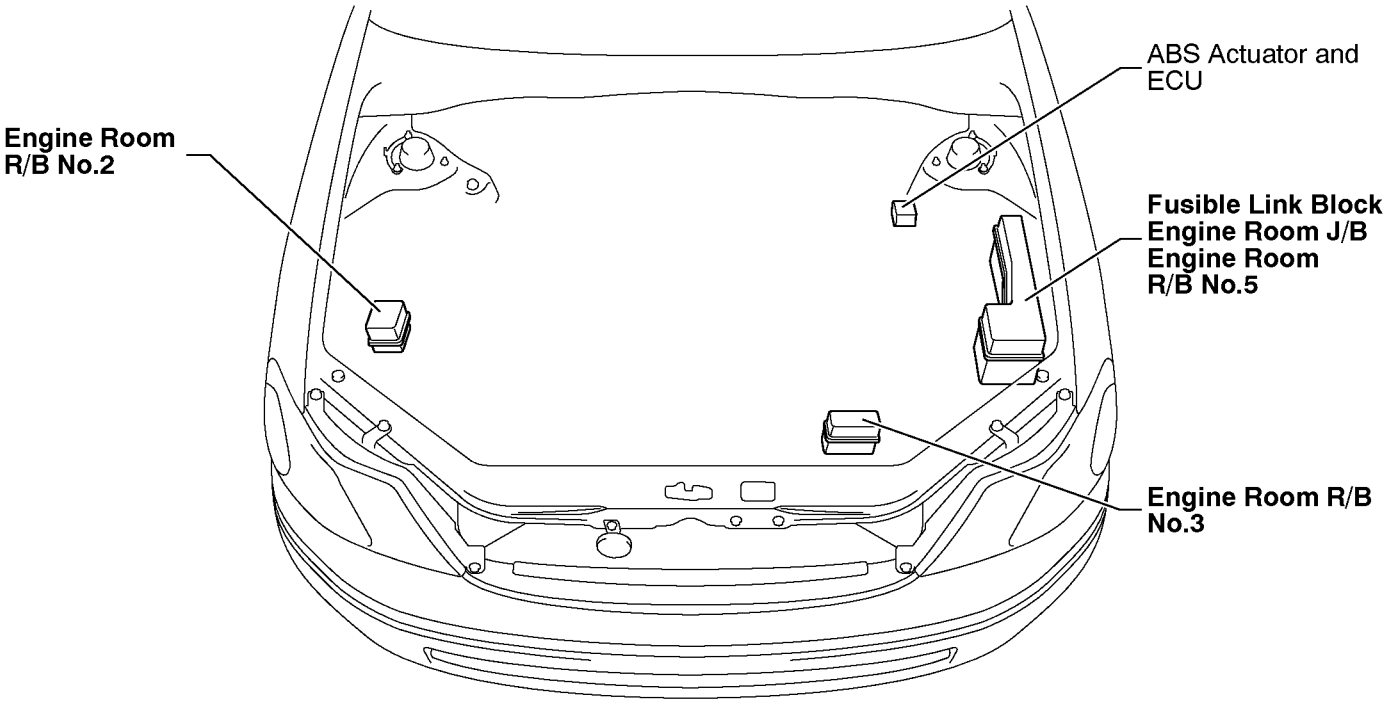

[Body]

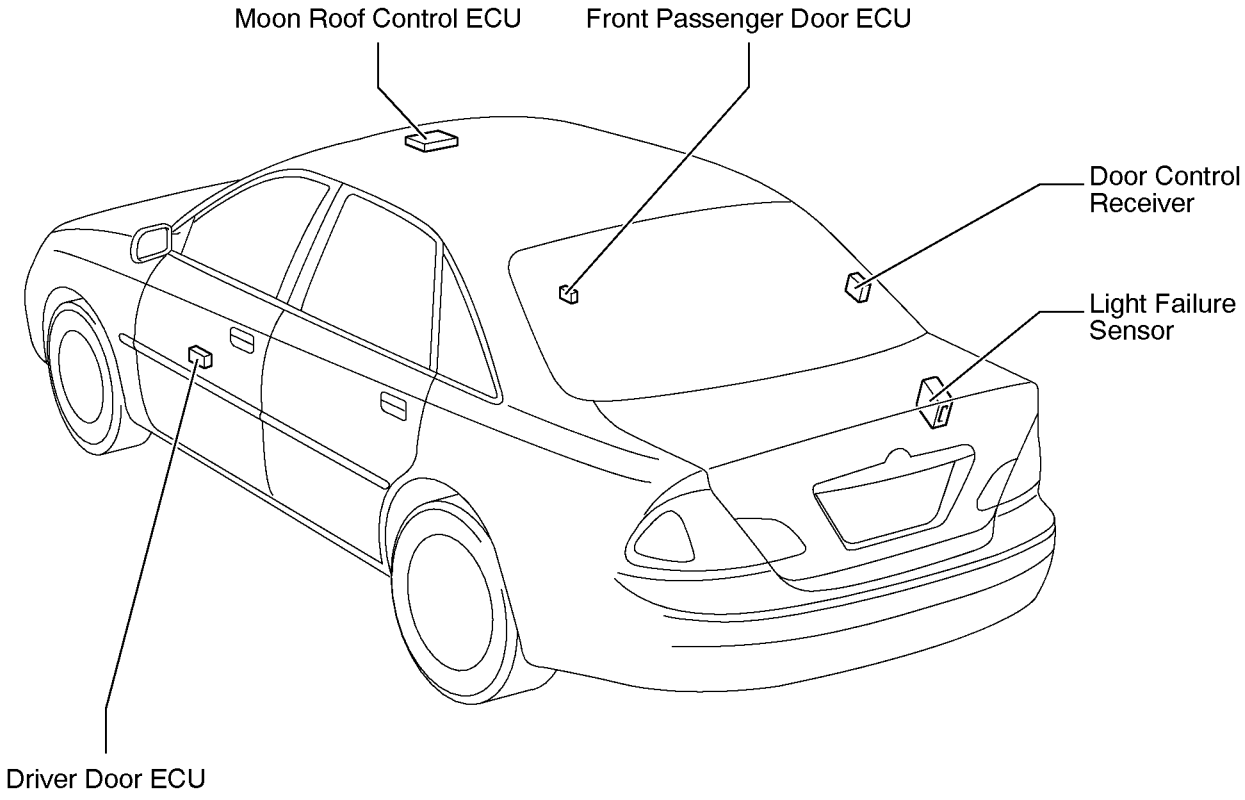

[Instrument Panel]
(Column Shift)

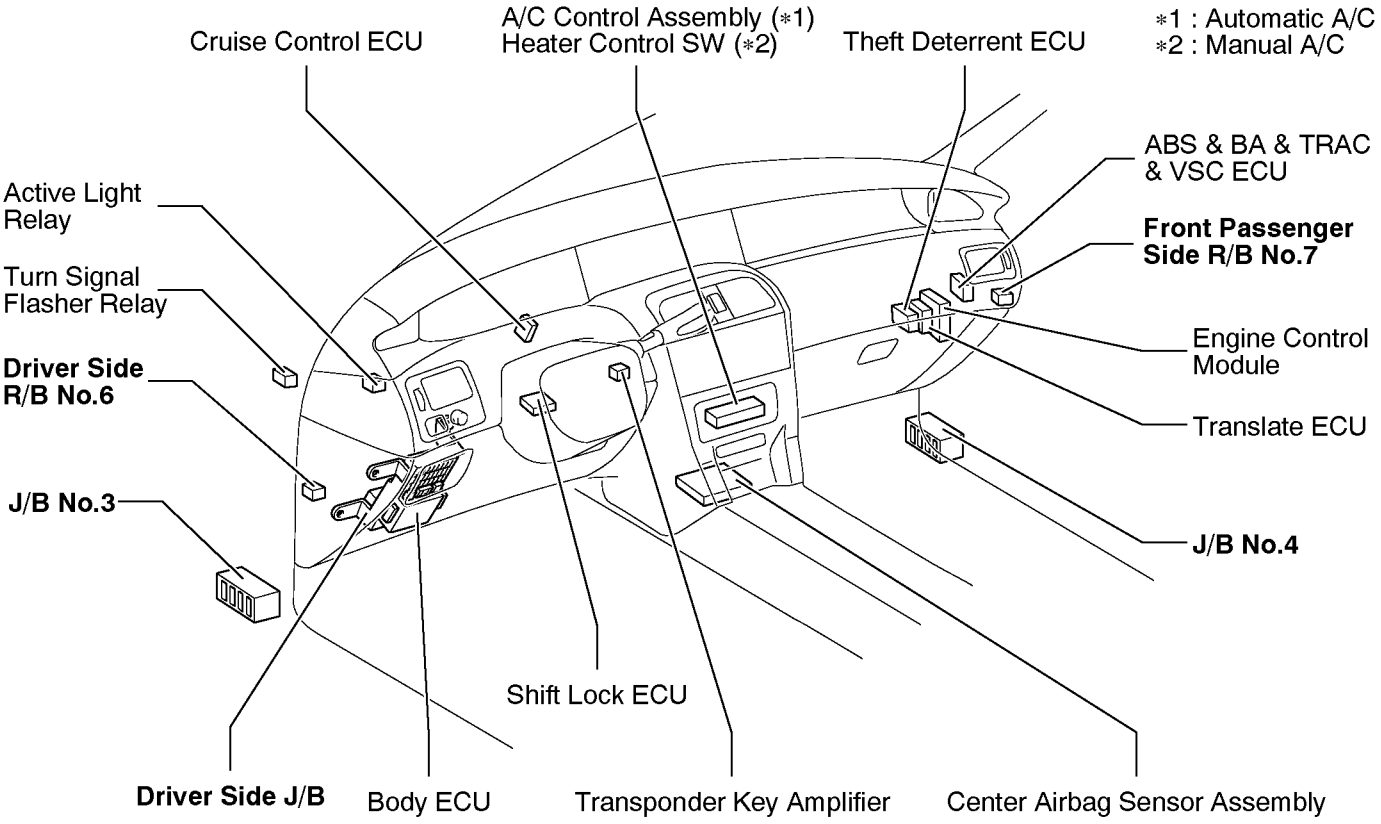

(Floor Shift)

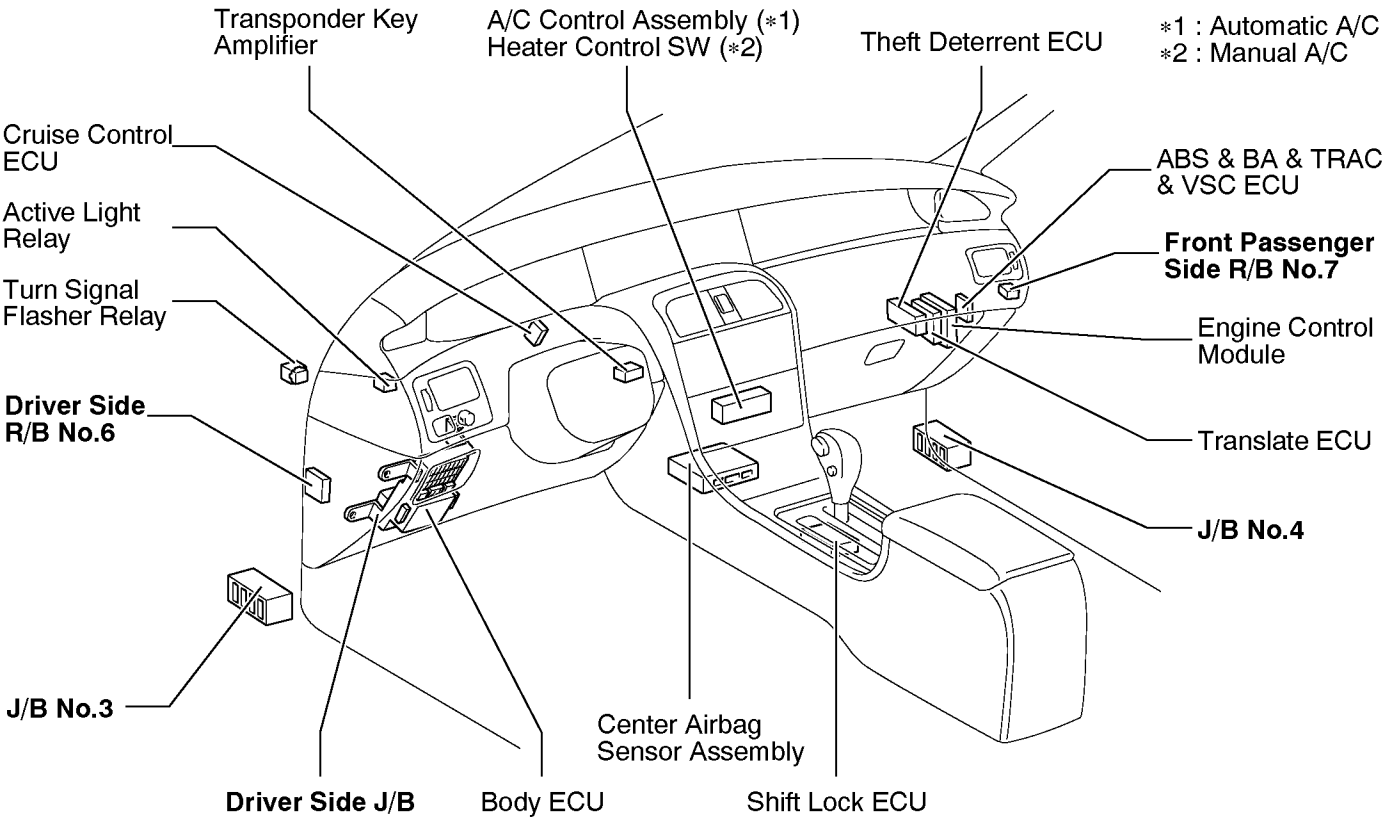

[Seat]
(Column Shift)

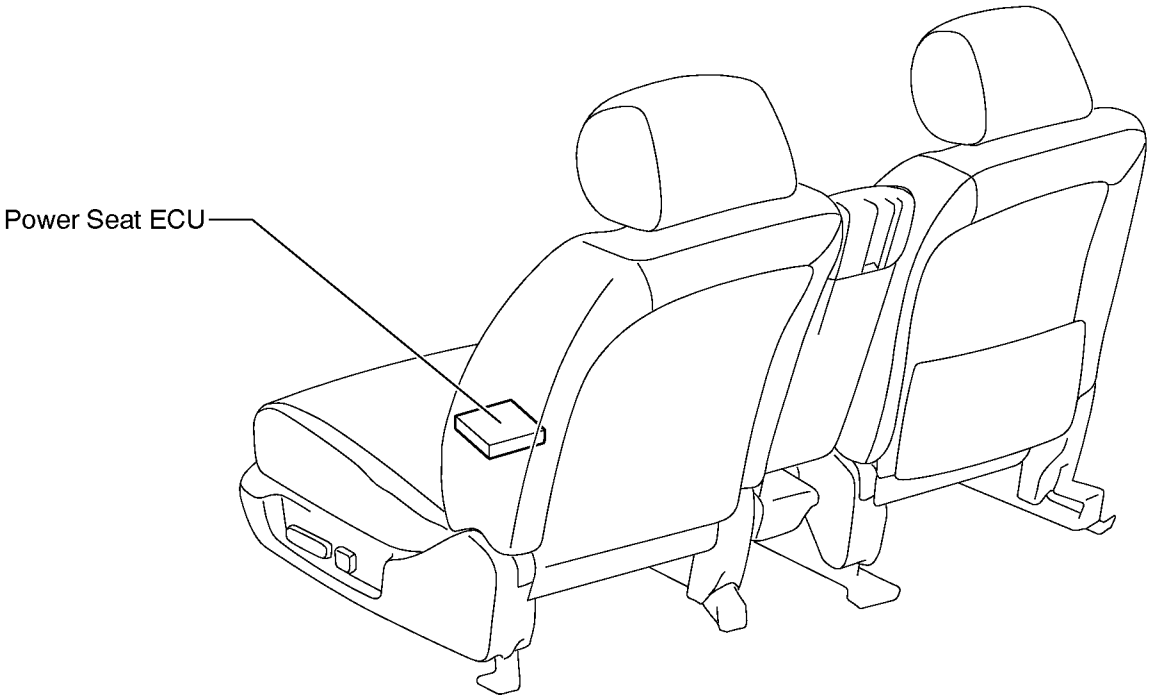

(Floor Shift)

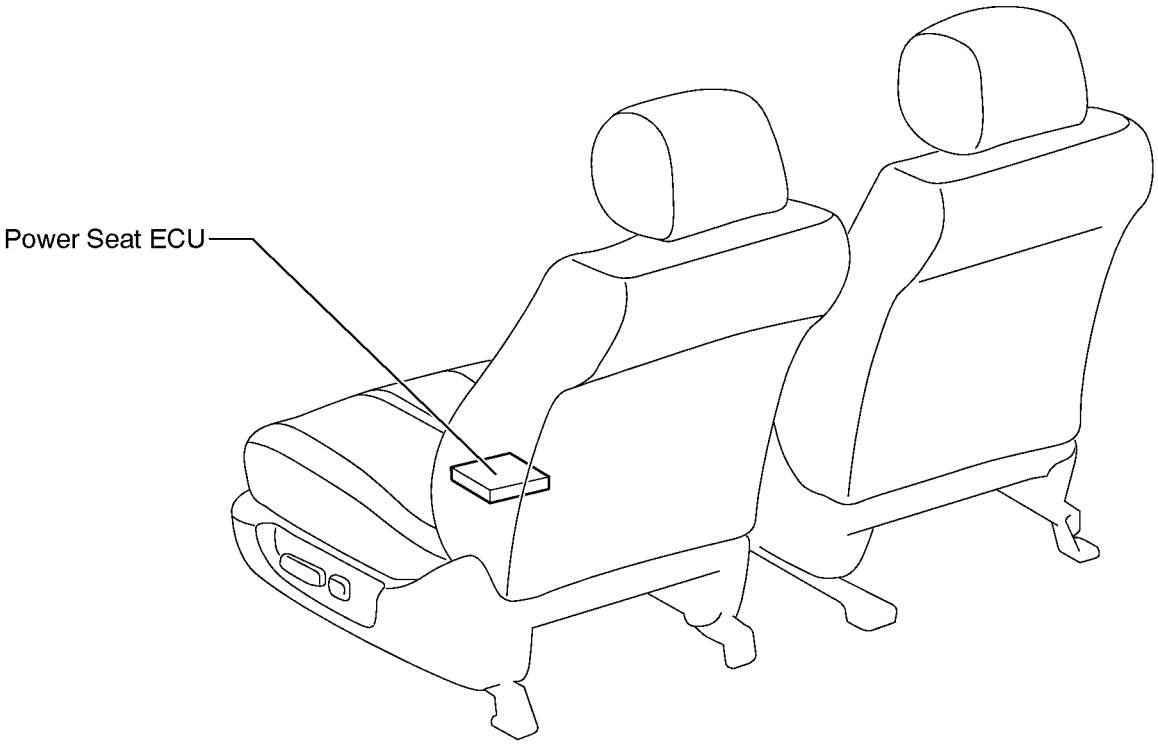

Fusible Link Block	Engine Compartment Left (See Page 20) [Inside Engine Room J/B]

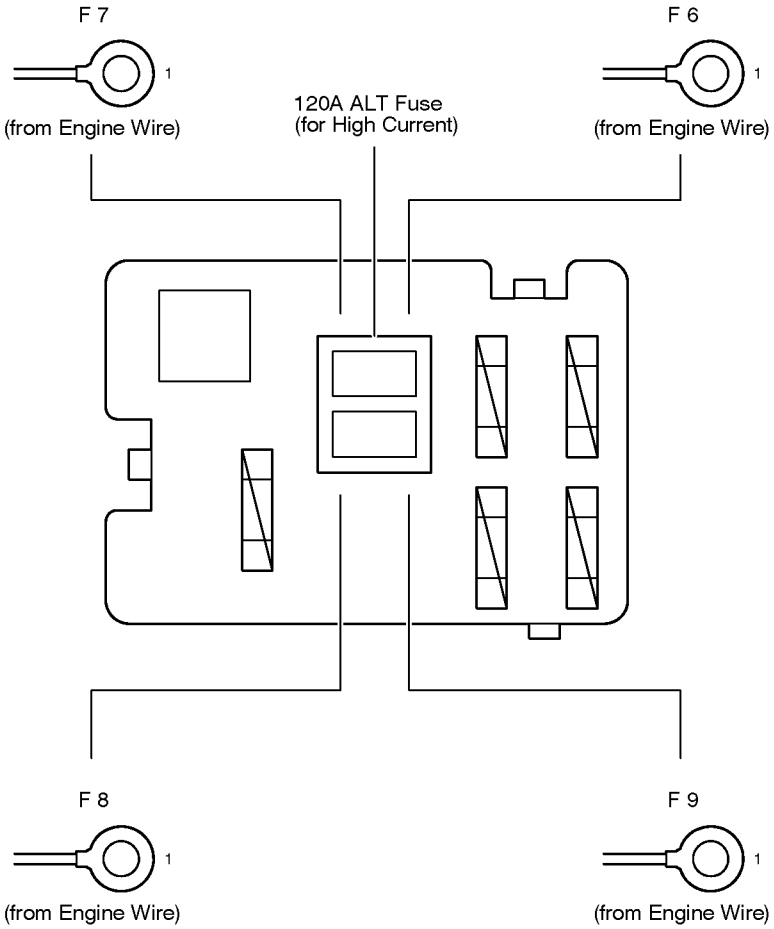

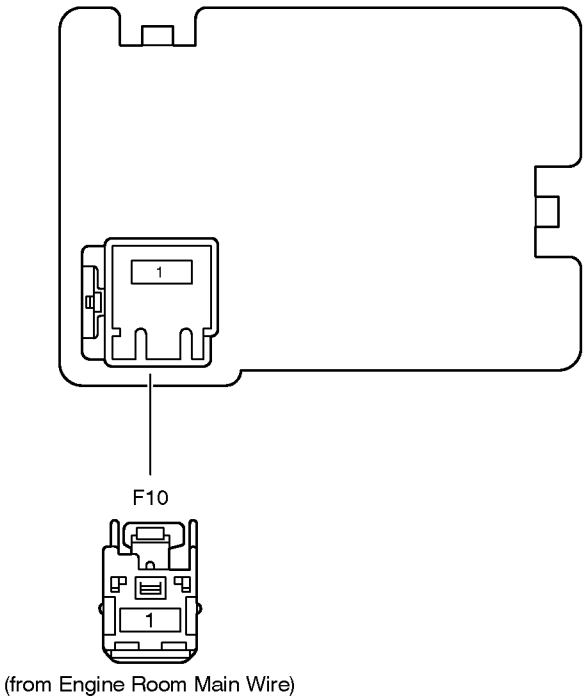

F RELAY LOCATIONS

② : Engine Room R/B No.2	Engine Compartment Right (See Page 20)

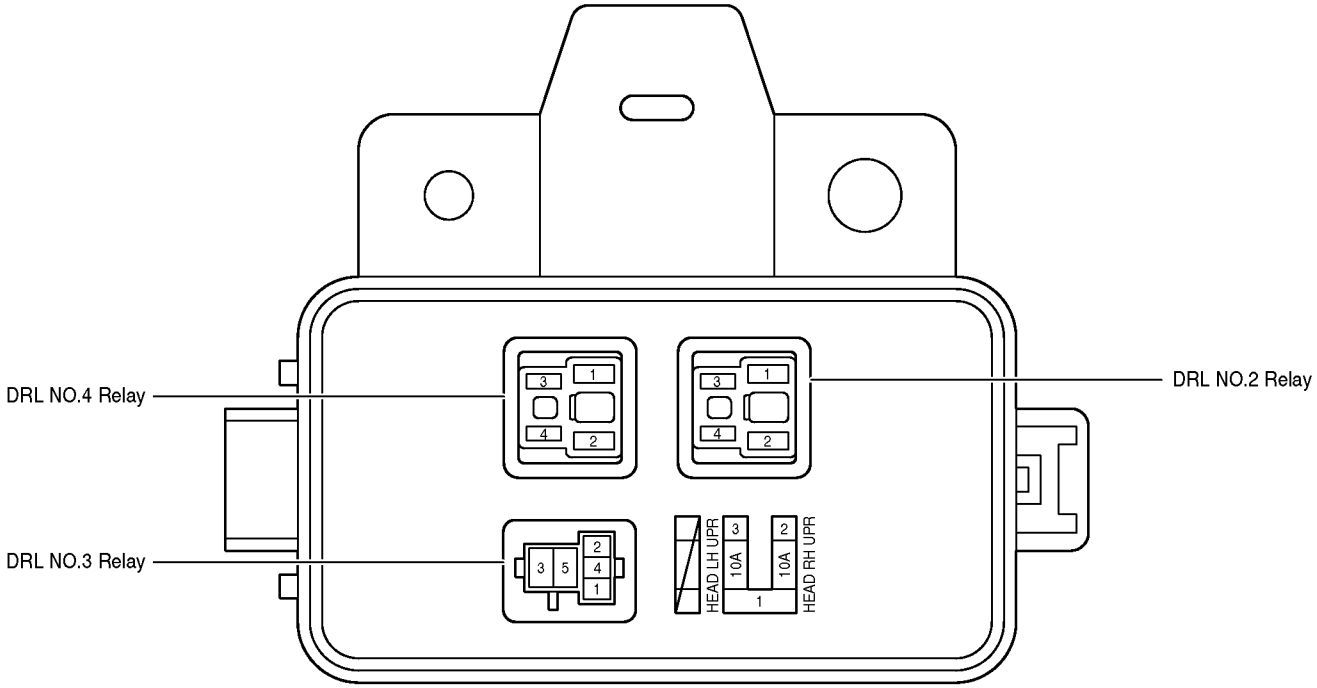

③ : Engine Room R/B No.3	Near the Radiator Fan (See Page 20)

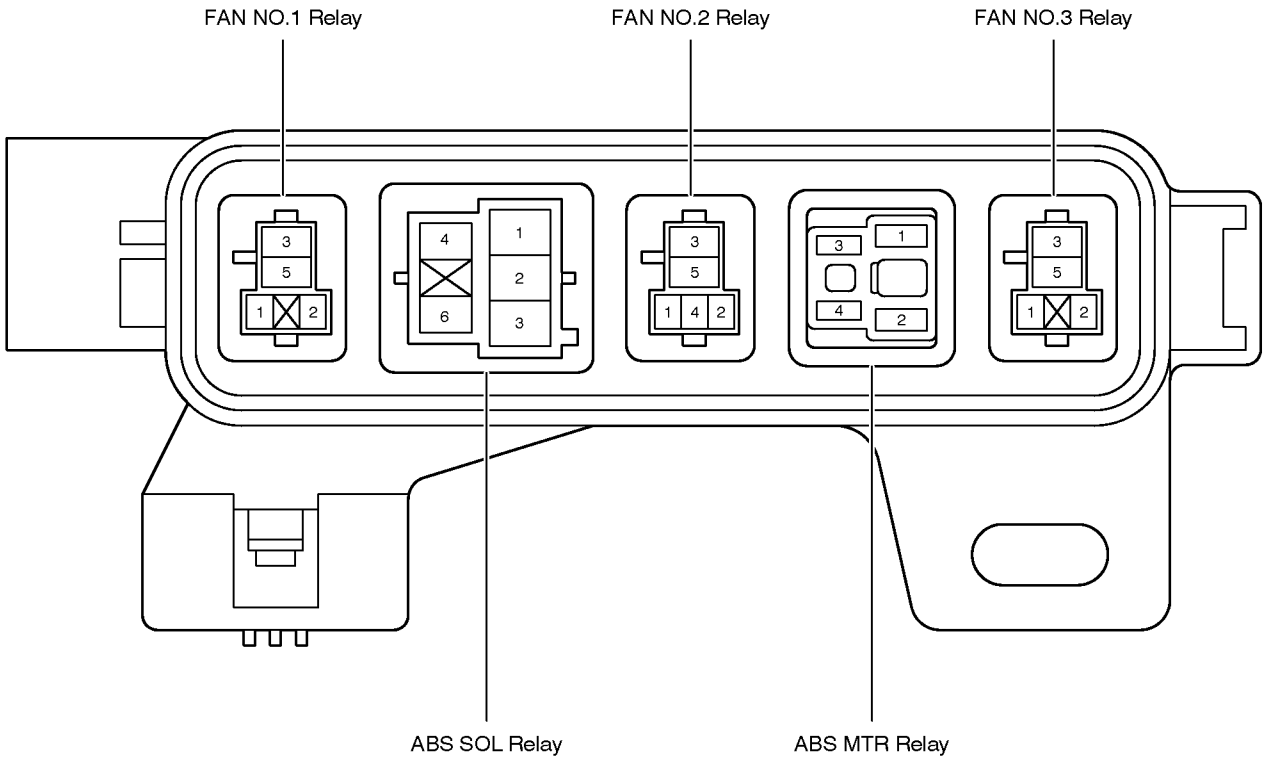

⑤ : Engine Room R/B No.5	EngineCompartment Left (See Page 20) (Inside Engine Room J/B)

∗ 1 : 15A HEAD LH
∗ 2 : 15A HEAD RH
∗ 3 : 15A HEAD LH LWR
∗ 4 : 15A HEAD RH LWR

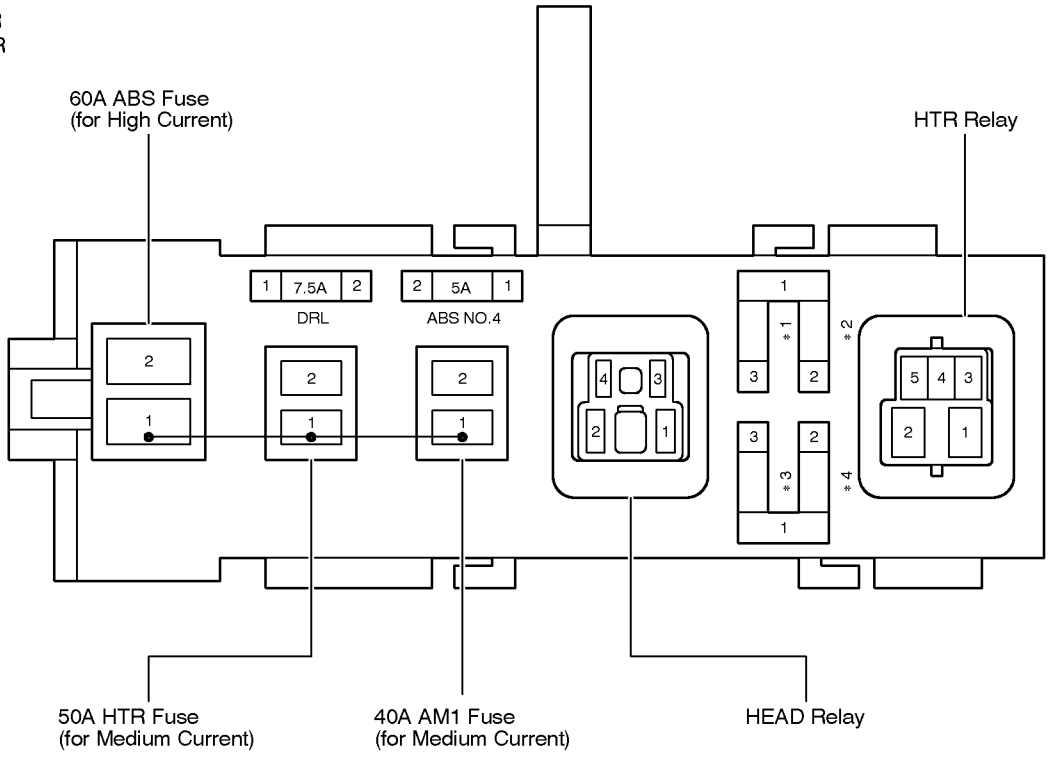

F RELAY LOCATIONS

: Driver Side J/B	Lower Finish Panel (See Page 21)

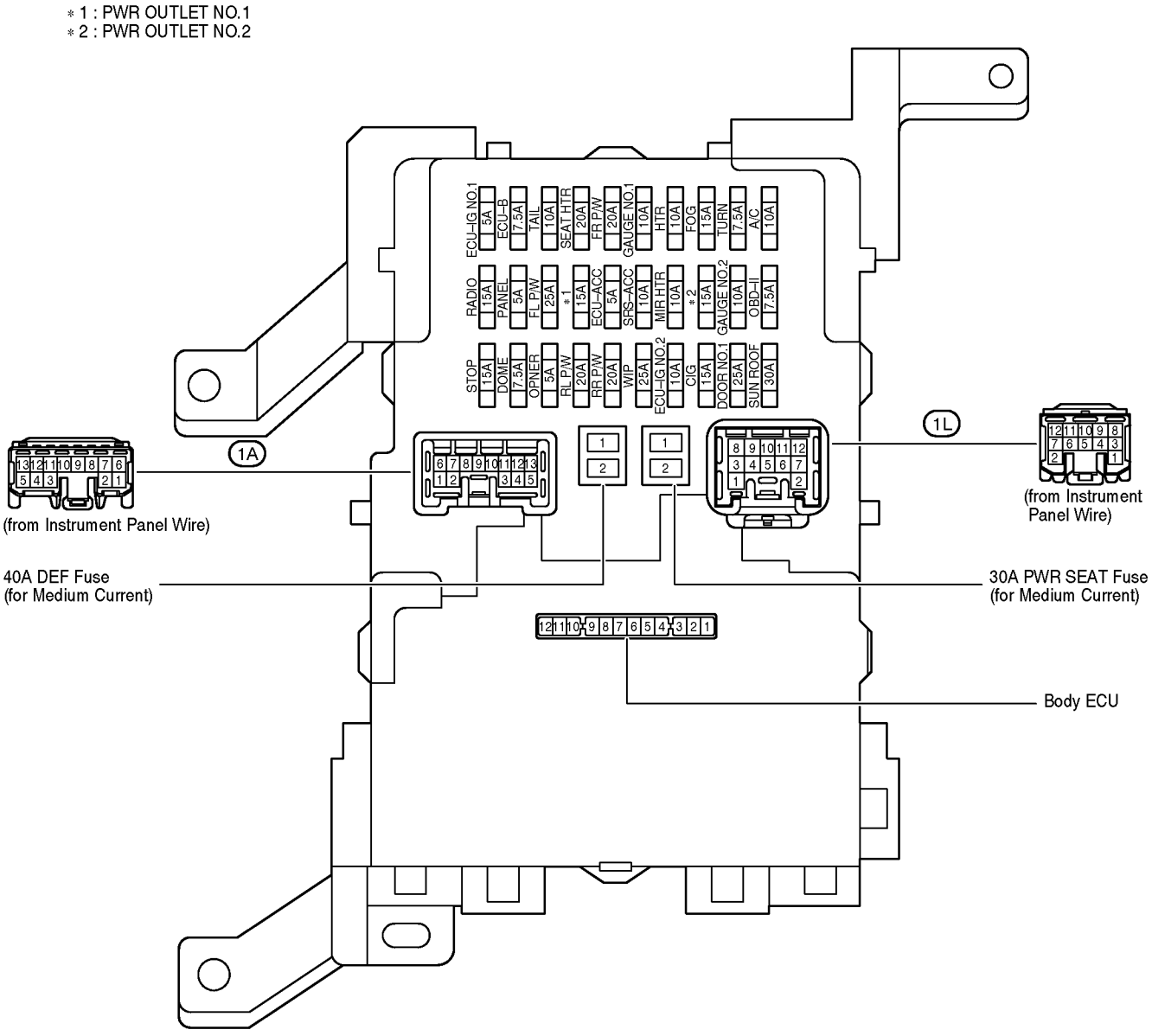

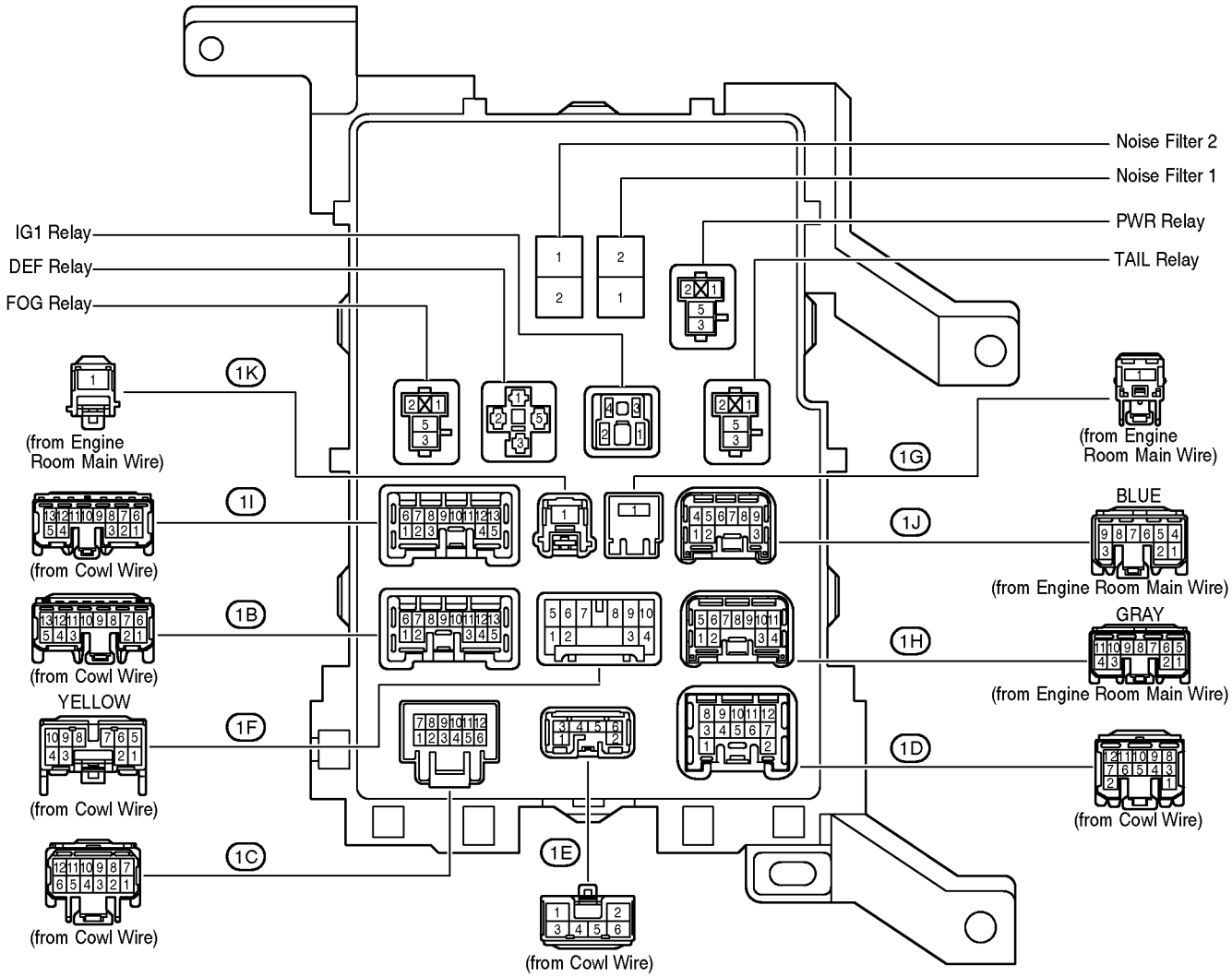
Noise Filter 2
Noise Filter 1
PWR Relay
TAIL Relay
IG1 Relay
DEF Relay
FOG Relay
1K
(from Engine Room Main Wire)
1G
(from Engine Room Main Wire)
1I
(from Cowl Wire)
1J
BLUE
(from Engine Room Main Wire)
1B
(from Cowl Wire)
1H
GRAY
(from Engine Room Main Wire)
YELLOW
1F
(from Cowl Wire)
1D
(from Cowl Wire)
1C
(from Cowl Wire)
1E
(from Cowl Wire)

[Driver Side J/B Inner Circuit]

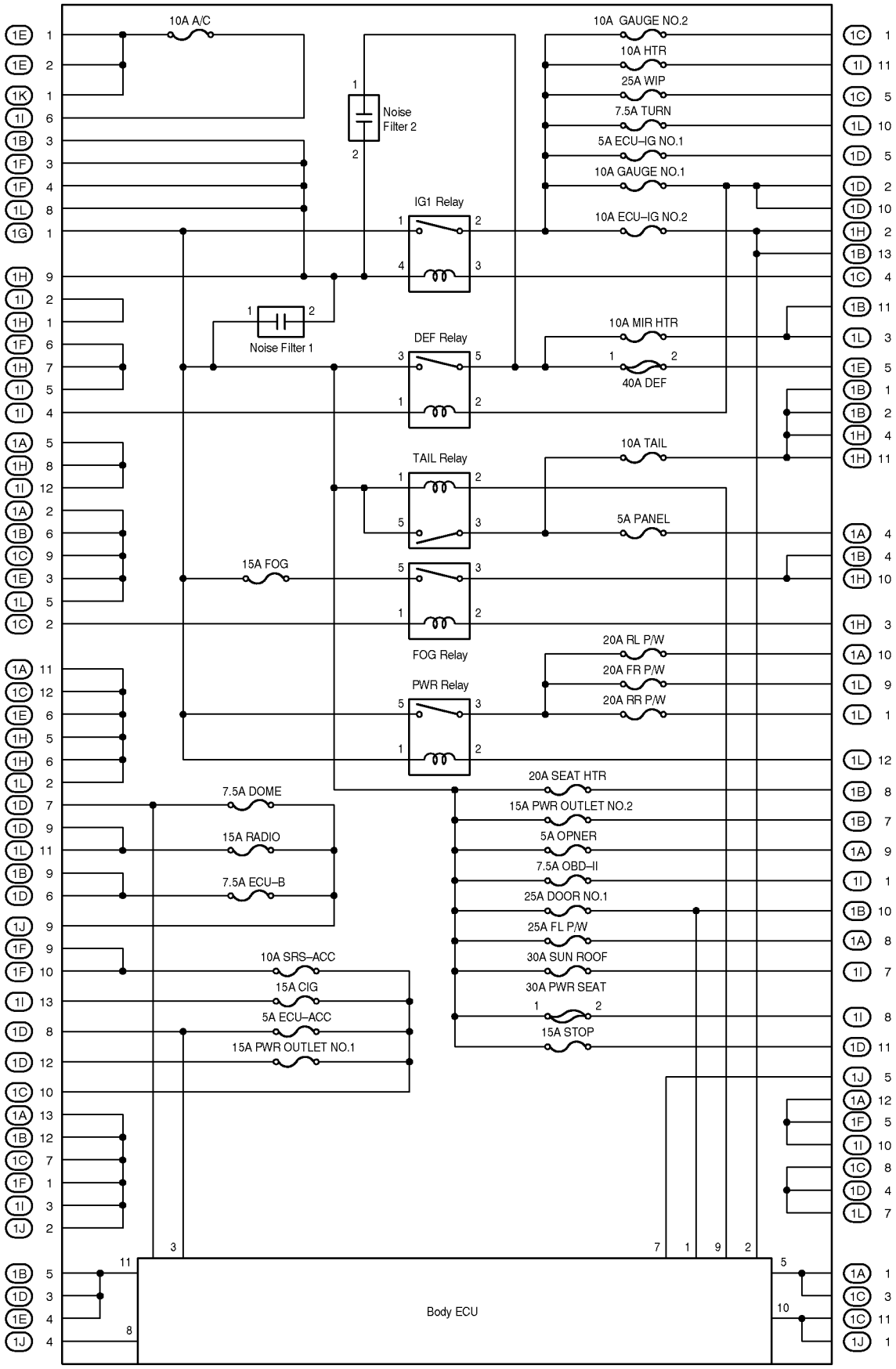

F RELAY LOCATIONS

: Engine Room J/B	Engine Compartment Left (See Page 20)

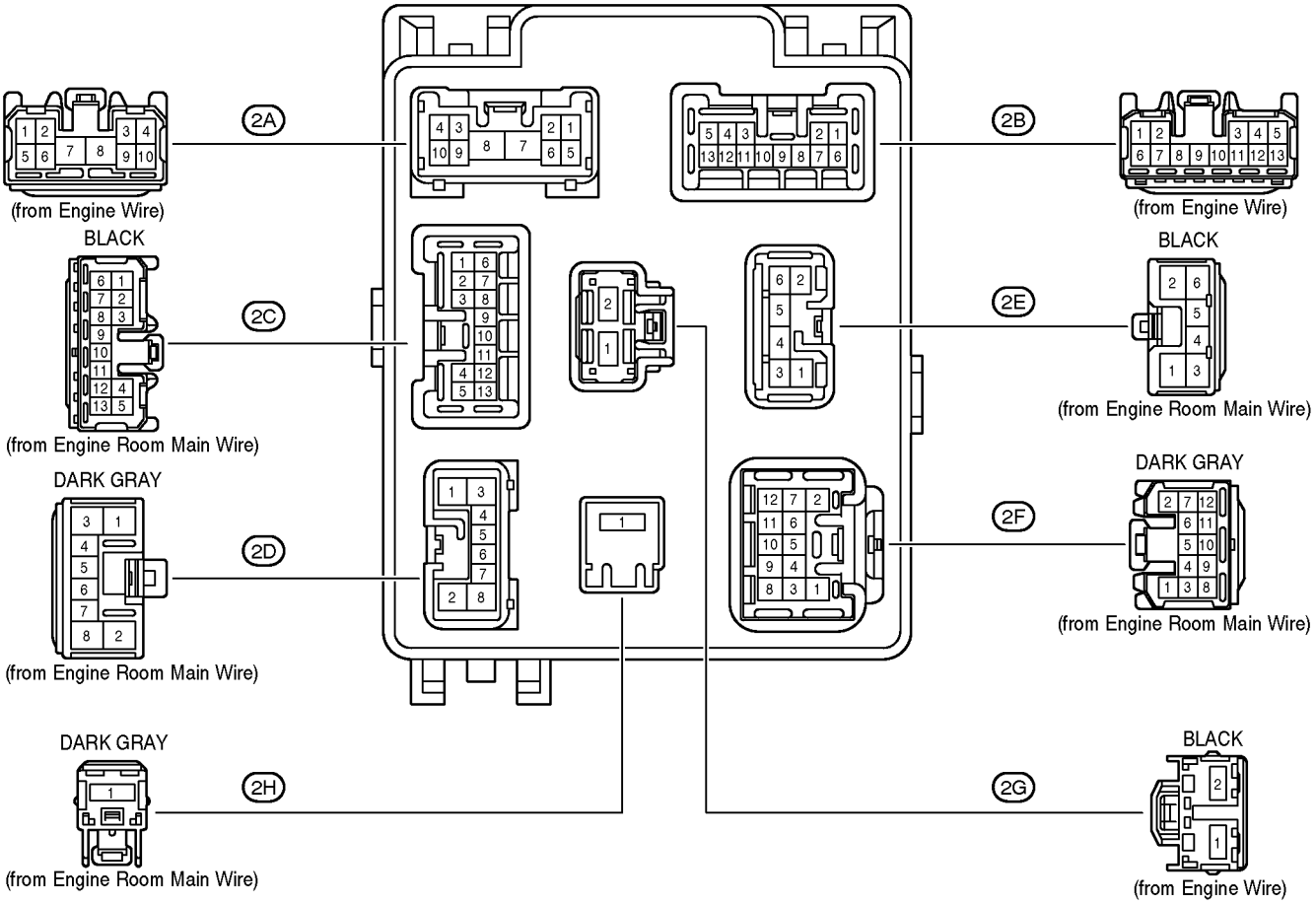

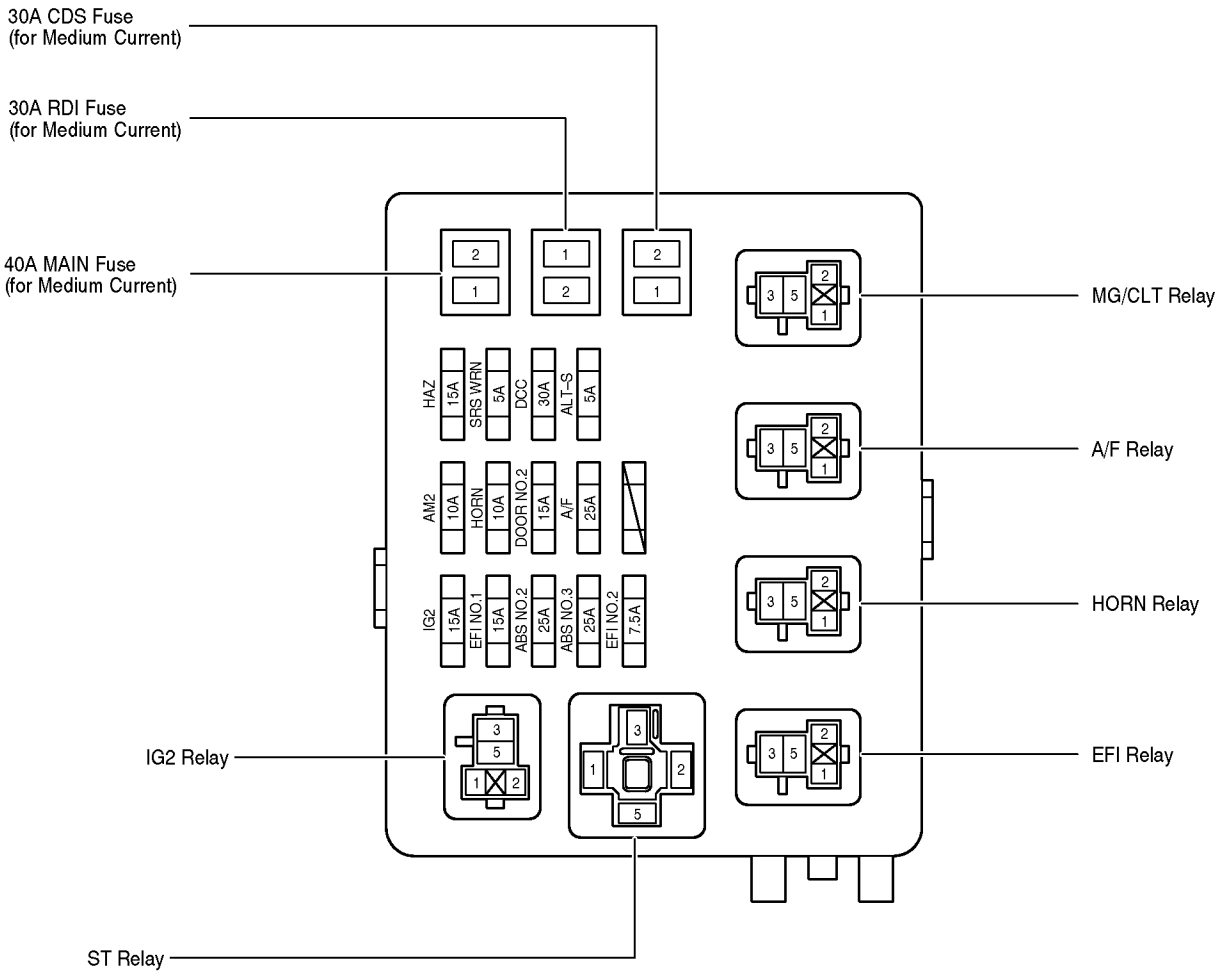
30A CDS Fuse
(for Medium Current)
30A RDI Fuse
(for Medium Current)
40A MAIN Fuse
(for Medium Current)
HAZ 15A
SRS WFN 5A
DCC 30A
ALT–S 5A
AM2 10A
HORN 10A
DOOR NO.2 15A
A/F 25A
IG2 15A
EFI NO.1 15A
ABS NO.2 25A
ABS NO.3 25A
EFI NO.2 7.5A
MG/CLT Relay
A/F Relay
HORN Relay
EFI Relay
IG2 Relay
ST Relay

[Engine Room J/B Inner Circuit]

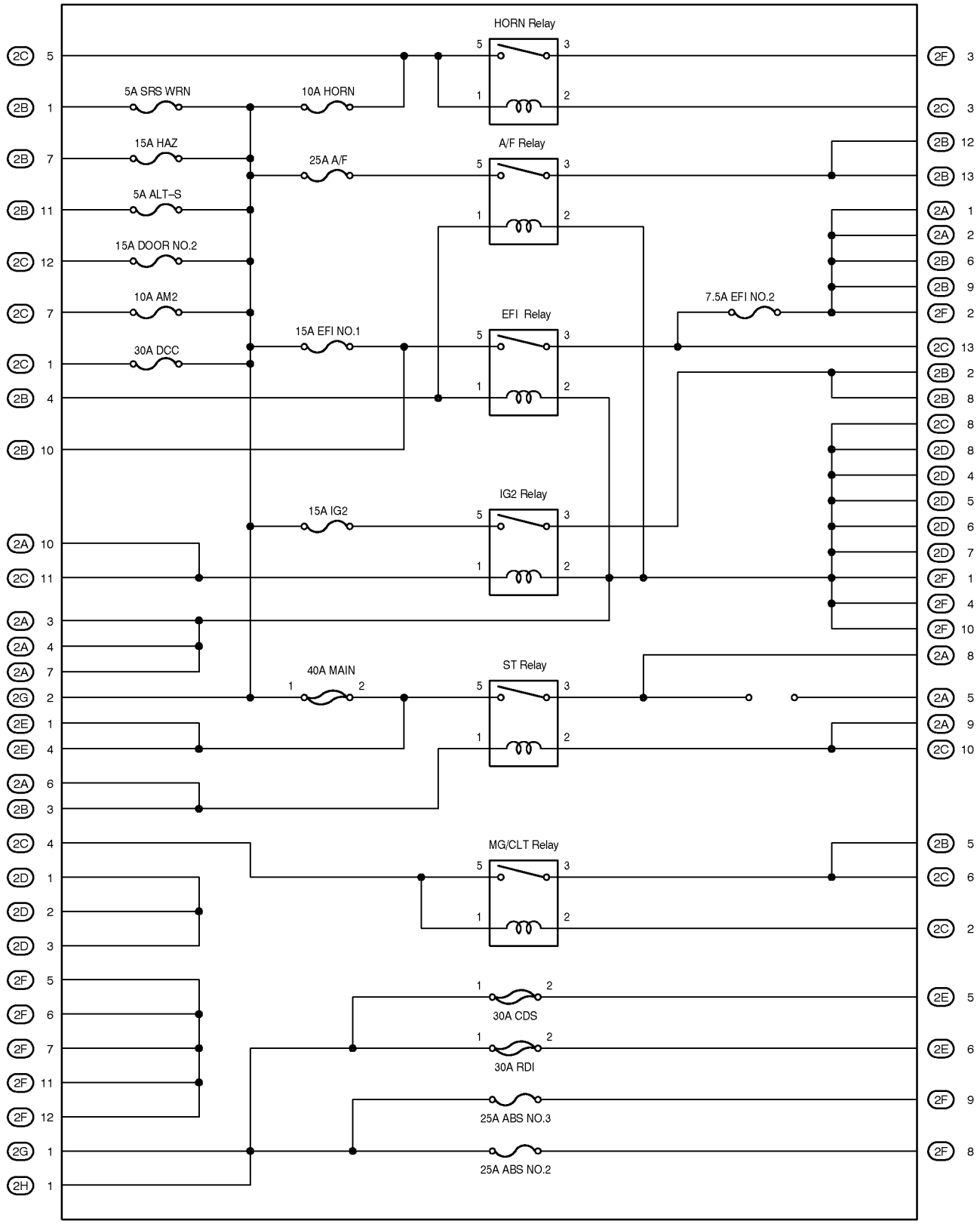

F RELAY LOCATIONS

: J/B No.3	Left Kick Panel (See Page 21)

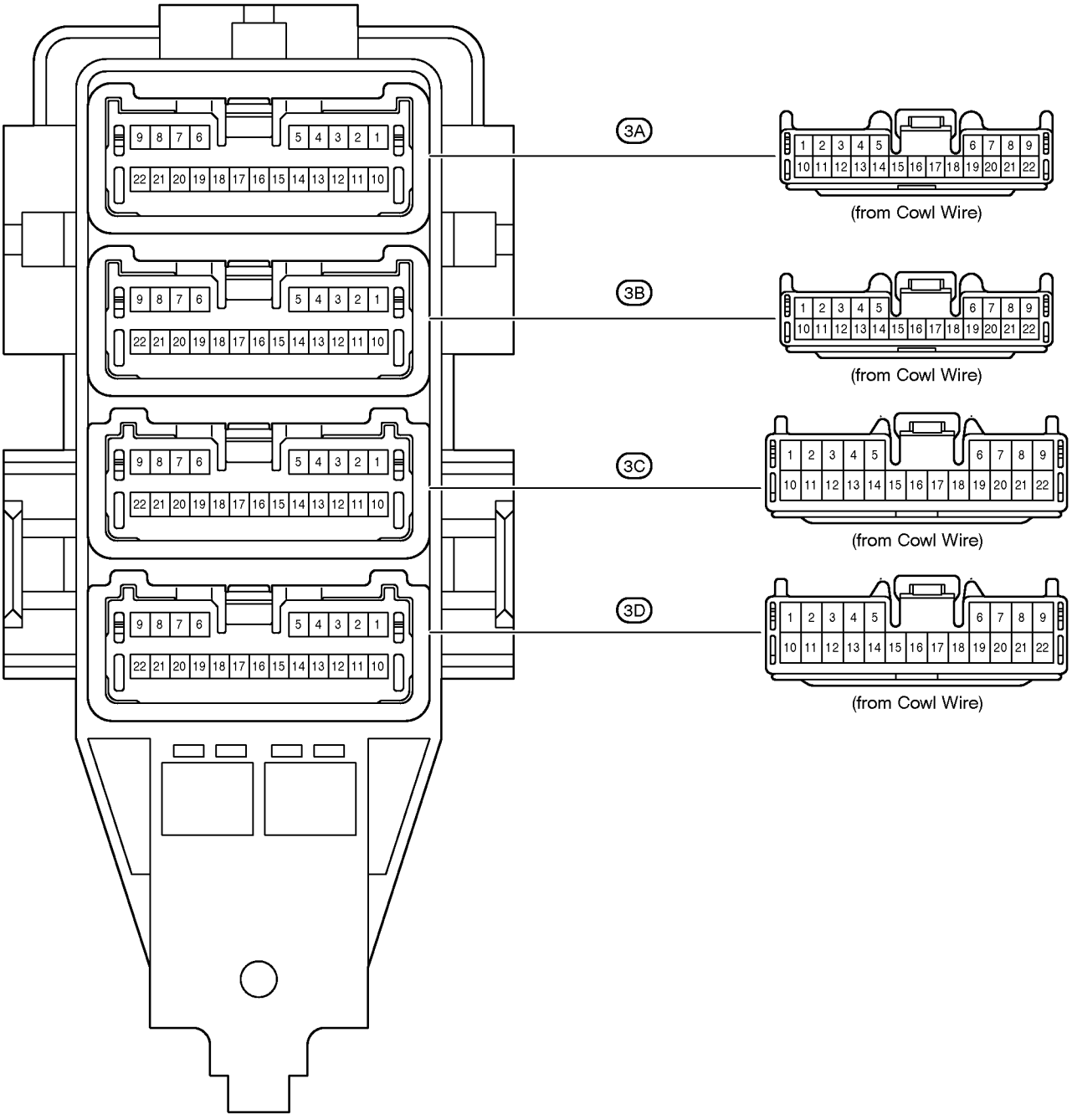

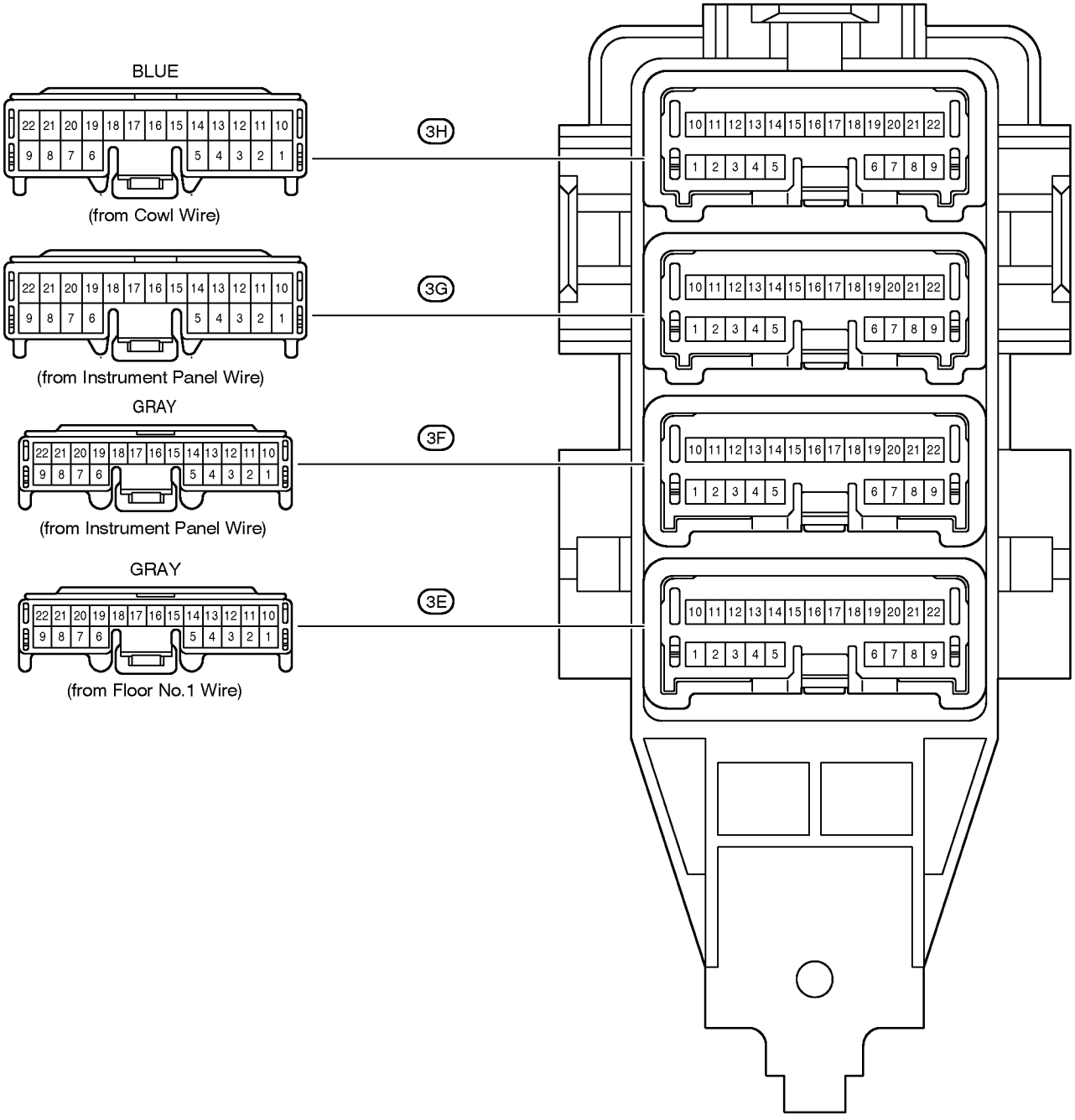
BLUE
22 21 20 19 18 17 16 15 14 13 12 11 10
9 8 7 6 5 4 3 2 1
(from Cowl Wire)
3H
22 21 20 19 18 17 16 15 14 13 12 11 10
9 8 7 6 5 4 3 2 1
(from Instrument Panel Wire)
3G
GRAY
22 21 20 19 18 17 16 15 14 13 12 11 10
9 8 7 6 5 4 3 2 1
(from Instrument Panel Wire)
3F
GRAY
22 21 20 19 18 17 16 15 14 13 12 11 10
9 8 7 6 5 4 3 2 1
(from Floor No.1 Wire)
3E
10 11 12 13 14 15 16 17 18 19 20 21 22
1 2 3 4 5 6 7 8 9

[J/B No.3 Inner Circuit]

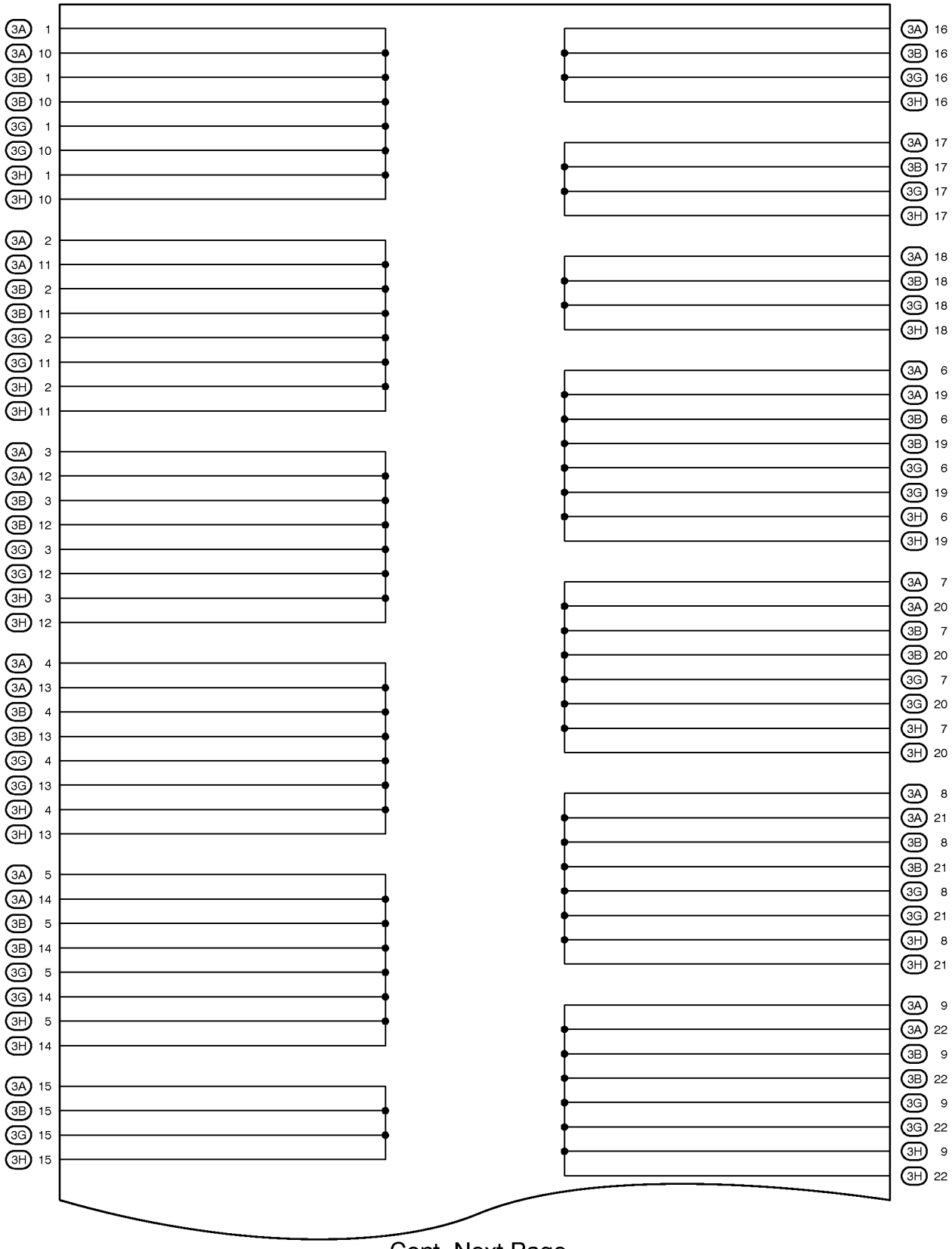

Cont. Next Page

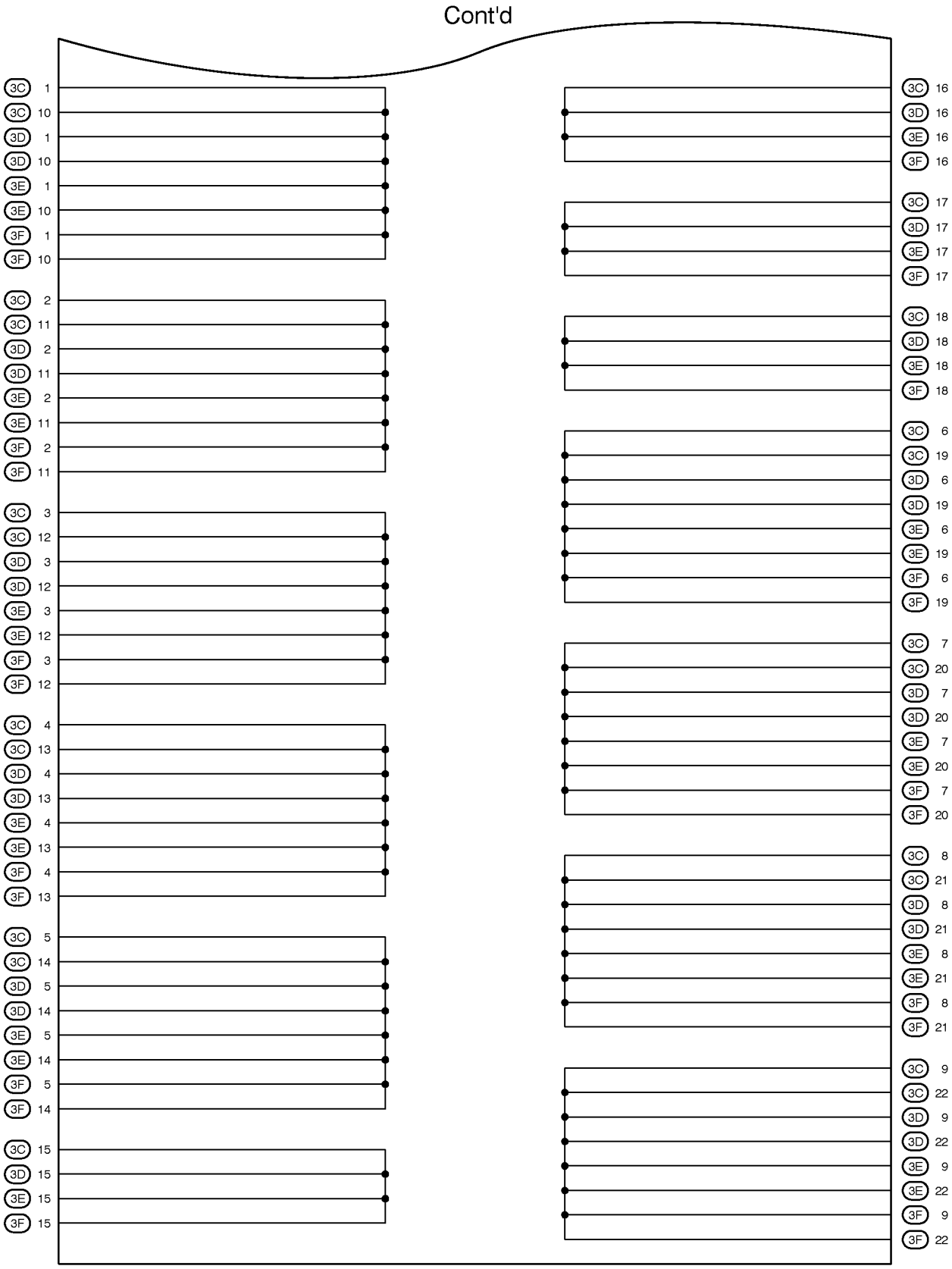
Cont'd
3C 1
3C 10
3D 1
3D 10
3E 1
3E 10
3F 1
3F 10
3C 2
3C 11
3D 2
3D 11
3E 2
3E 11
3F 2
3F 11
3C 3
3C 12
3D 3
3D 12
3E 3
3E 12
3F 3
3F 12
3C 4
3C 13
3D 4
3D 13
3E 4
3E 13
3F 4
3F 13
3C 5
3C 14
3D 5
3D 14
3E 5
3E 14
3F 5
3F 14
3C 15
3D 15
3E 15
3F 15
3C 16
3D 16
3E 16
3F 16
3C 17
3D 17
3E 17
3F 17
3C 18
3D 18
3E 18
3F 18
3C 6
3C 19
3D 6
3D 19
3E 6
3E 19
3F 6
3F 19
3C 7
3C 20
3D 7
3D 20
3E 7
3E 20
3F 7
3F 20
3C 8
3C 21
3D 8
3D 21
3E 8
3E 21
3F 8
3F 21
3C 9
3C 22
3D 9
3D 22
3E 9
3E 22
3F 9
3F 22

F RELAY LOCATIONS

: J/B No.4	Right Kick Panel (See Page 21)

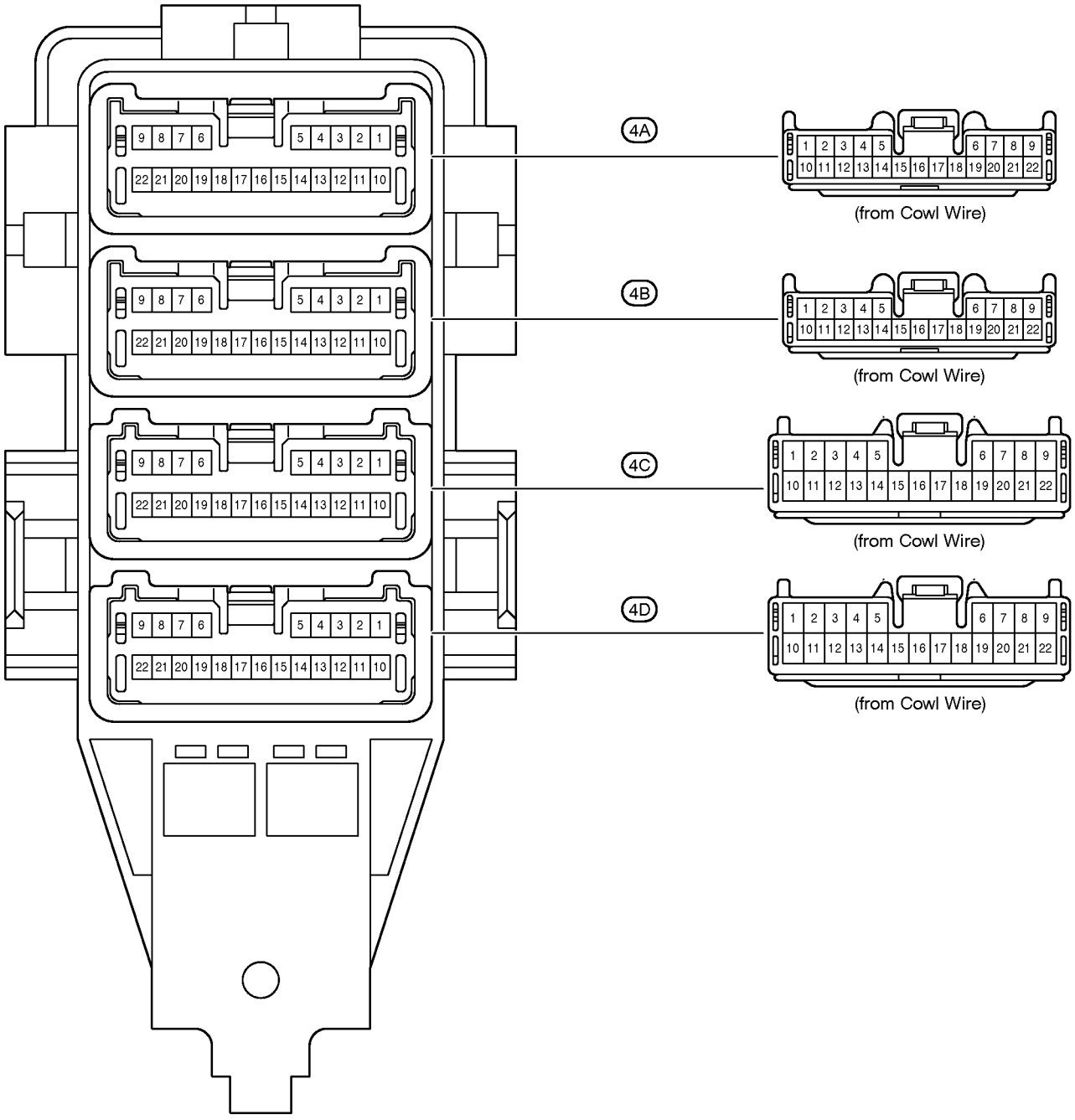

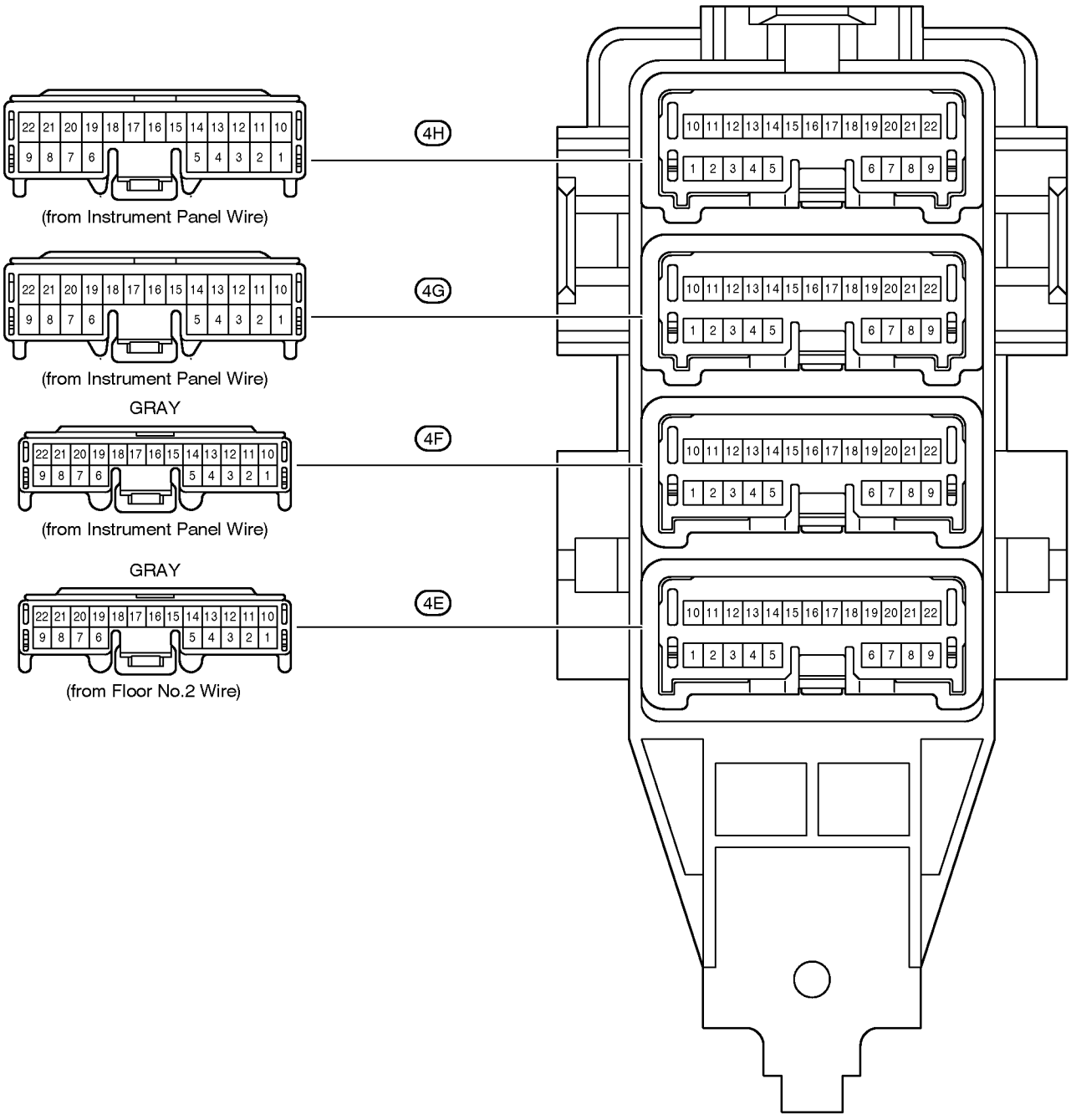
22 21 20 19 18 17 16 15 14 13 12 11 10
9 8 7 6 5 4 3 2 1
(from Instrument Panel Wire)
4H
4G
GRAY
4F
GRAY
4E
(from Floor No.2 Wire)
10 11 12 13 14 15 16 17 18 19 20 21 22
1 2 3 4 5 6 7 8 9

[J/B No.4 Inner Circuit]

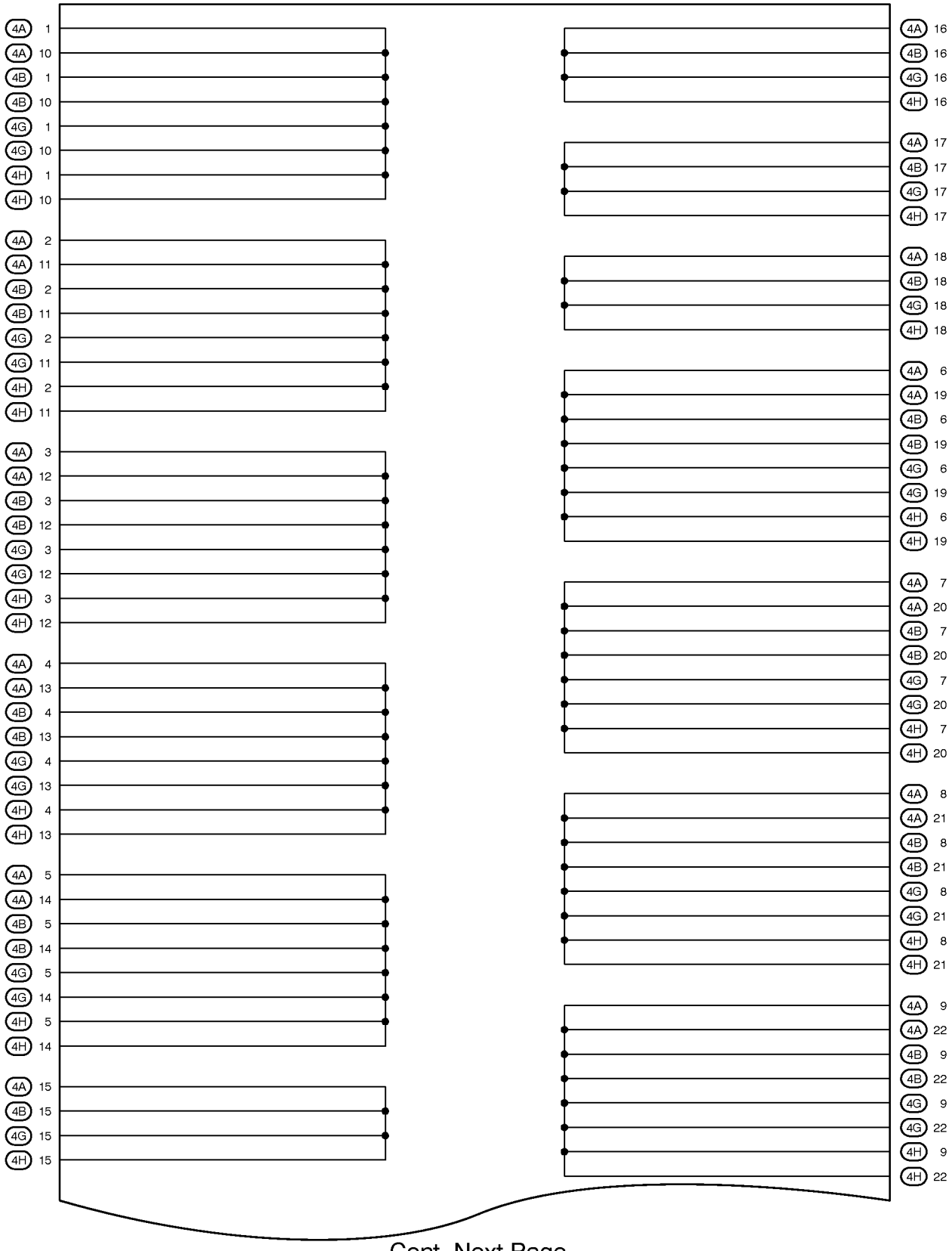

Cont. Next Page

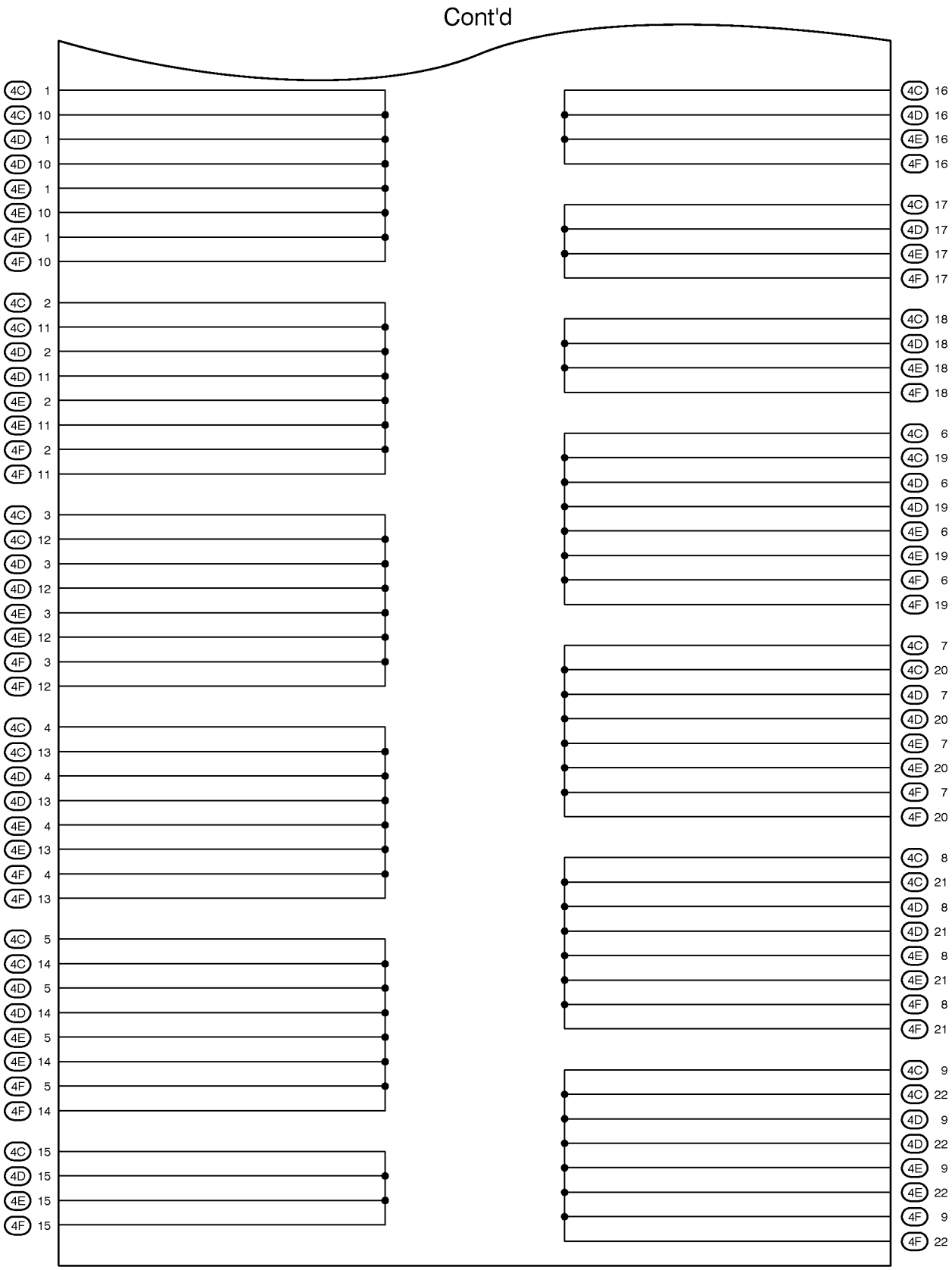
Cont'd
4C 1
4C 10
4D 1
4D 10
4E 1
4E 10
4F 1
4F 10
4C 2
4C 11
4D 2
4D 11
4E 2
4E 11
4F 2
4F 11
4C 3
4C 12
4D 3
4D 12
4E 3
4E 12
4F 3
4F 12
4C 4
4C 13
4D 4
4D 13
4E 4
4E 13
4F 4
4F 13
4C 5
4C 14
4D 5
4D 14
4E 5
4E 14
4F 5
4F 14
4C 15
4D 15
4E 15
4F 15
4C 16
4D 16
4E 16
4F 16
4C 17
4D 17
4E 17
4F 17
4C 18
4D 18
4E 18
4F 18
4C 6
4C 19
4D 6
4D 19
4E 6
4E 19
4F 6
4F 19
4C 7
4C 20
4D 7
4D 20
4E 7
4E 20
4F 7
4F 20
4C 8
4C 21
4D 8
4D 21
4E 8
4E 21
4F 8
4F 21
4C 9
4C 22
4D 9
4D 22
4E 9
4E 22
4F 9
4F 22

F RELAY LOCATIONS

⑥ : Driver Side R/B No.6	Left Kick Panel (See Page 21)

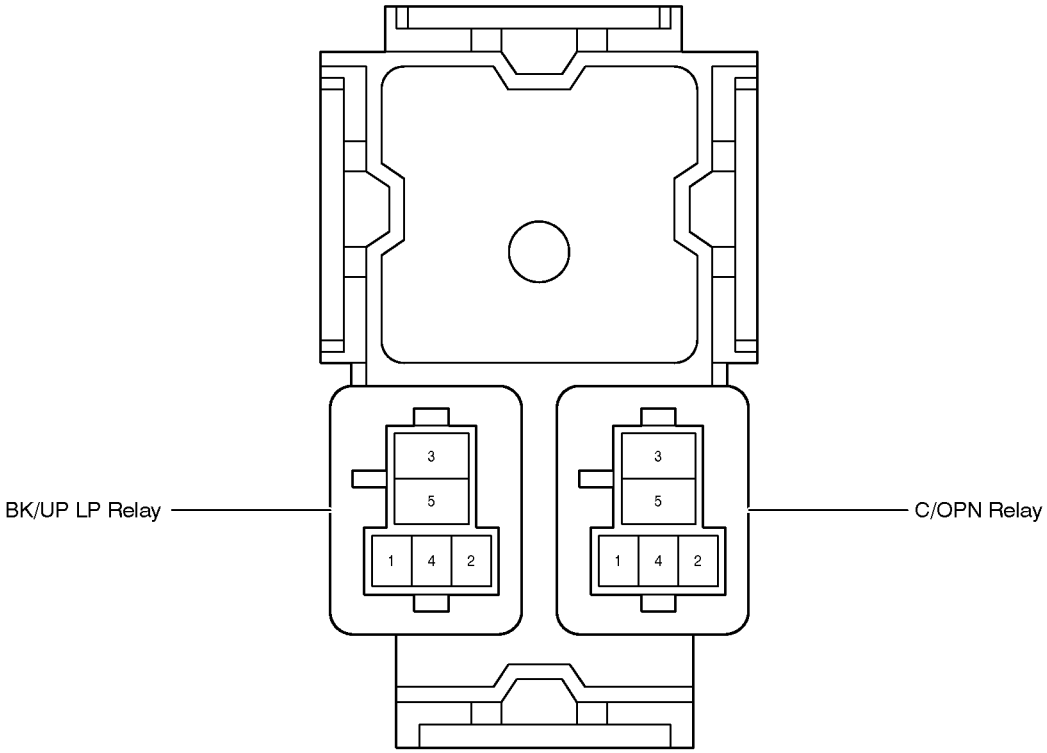

⑦ : Front Passenger Side R/B No.7	Right Kick Panel (See Page 21)

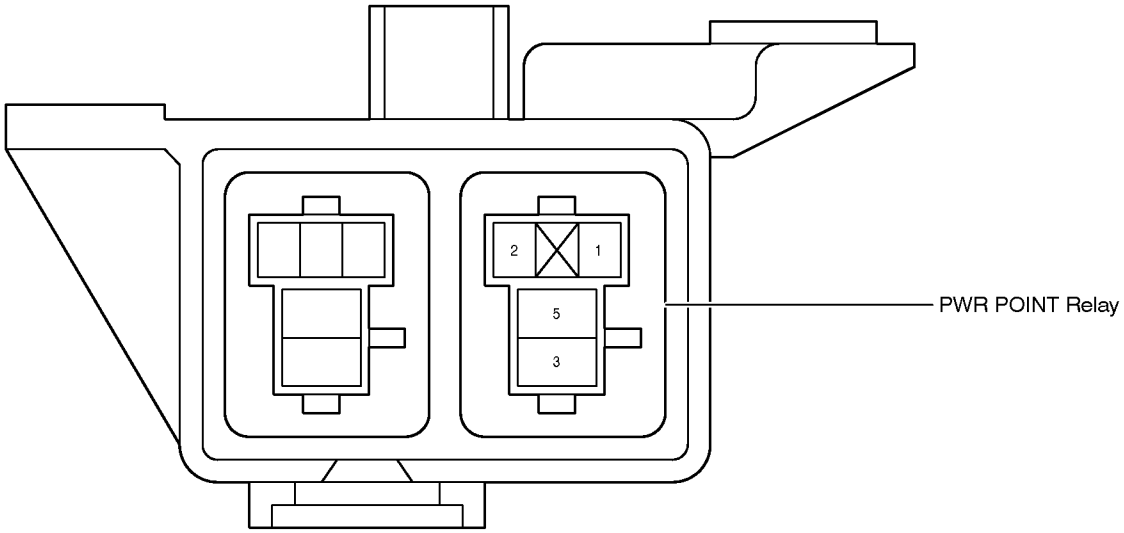

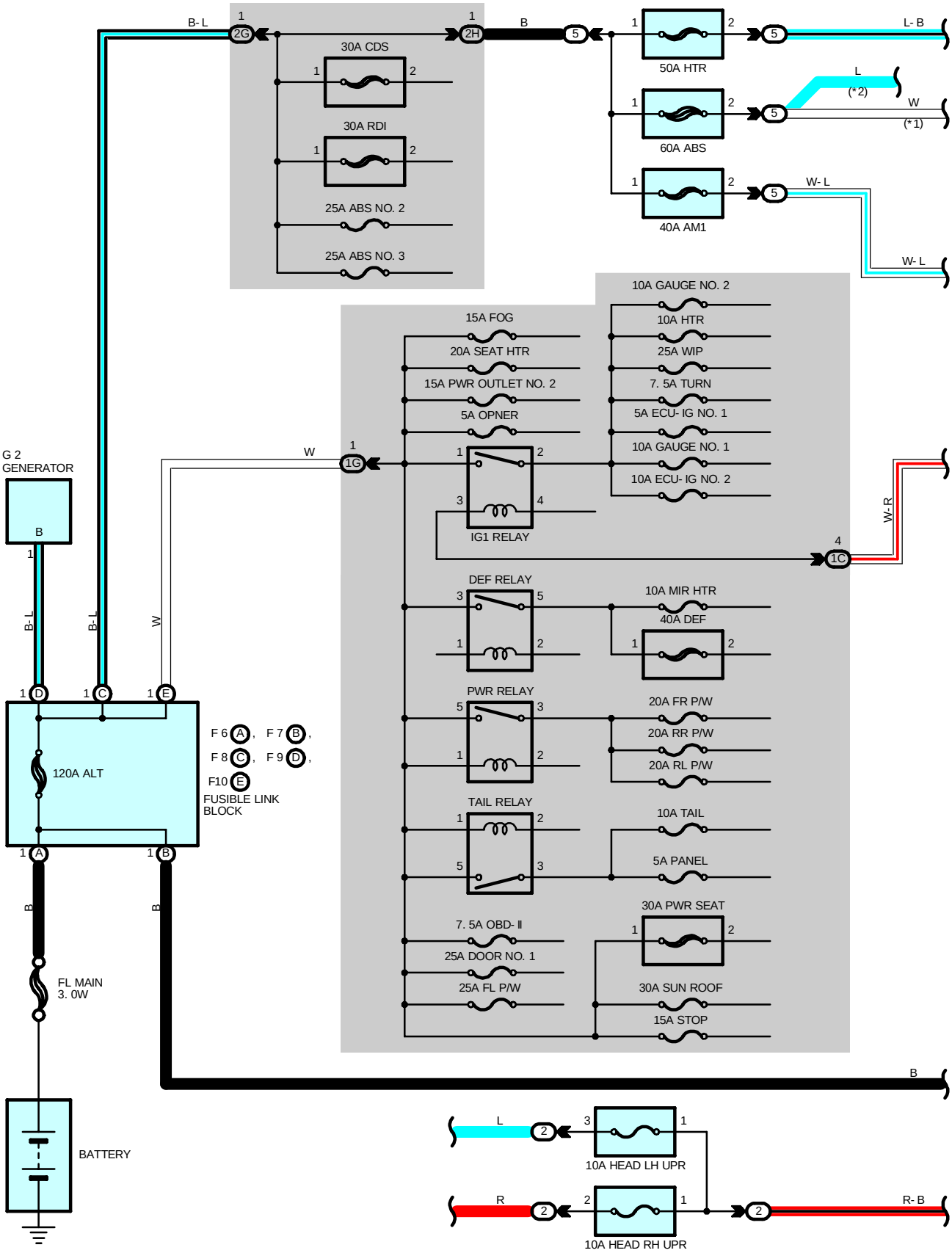
B- L
2G
2H
B
5
30A CDS
30A RDI
25A ABS NO. 2
25A ABS NO. 3
50A HTR
60A ABS
40A AM1
L- B
L
(*2)
W
(*1)
W- L
W- L
10A GAUGE NO. 2
15A FOG
20A SEAT HTR
15A PWR OUTLET NO. 2
5A OPNER
IG1 RELAY
10A HTR
25A WIP
7. 5A TURN
5A ECU- IG NO. 1
10A GAUGE NO. 1
10A ECU- IG NO. 2
W- R
1C
1G
G 2
GENERATOR
B
B- L
B- L
W
W
1D
1C
1E
120A ALT
F 6 A , F 7 B ,
F 8 C , F 9 D ,
F10 E
FUSIBLE LINK
BLOCK
1A
1B
B
B
FL MAIN
3. 0W
BATTERY
DEF RELAY
10A MIR HTR
40A DEF
PWR RELAY
20A FR P/W
20A RR P/W
20A RL P/W
TAIL RELAY
10A TAIL
5A PANEL
30A PWR SEAT
7. 5A OBD- II
25A DOOR NO. 1
25A FL P/W
30A SUN ROOF
15A STOP
B
L
10A HEAD LH UPR
R
10A HEAD RH UPR
R- B

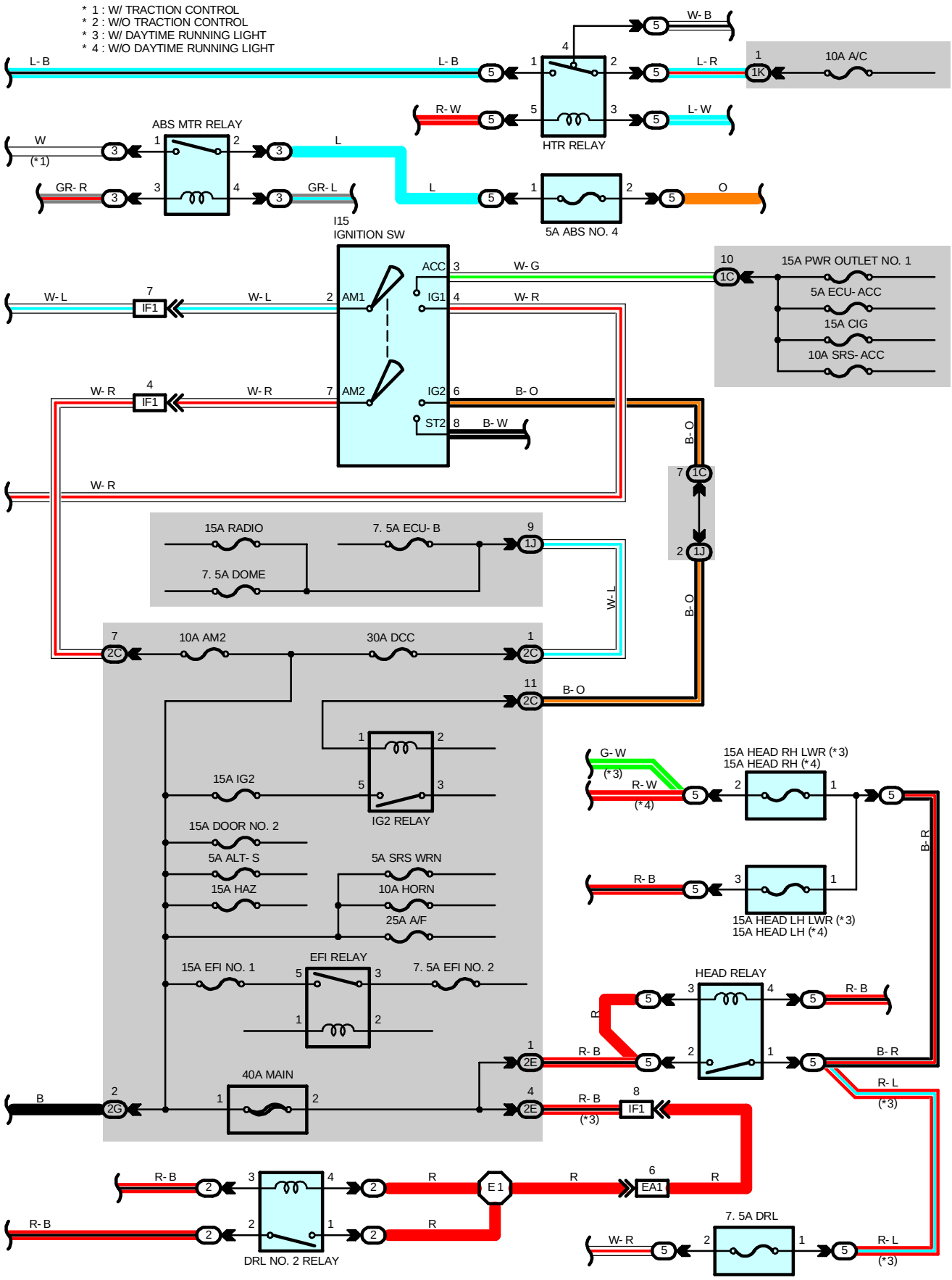
* 1 : W/ TRACTION CONTROL
* 2 : W/O TRACTION CONTROL
* 3 : W/ DAYTIME RUNNING LIGHT
* 4 : W/O DAYTIME RUNNING LIGHT
L- B
W- B
L- R
10A A/C
R- W
L- W
HTR RELAY
ABS MTR RELAY
W
(*1)
GR- R
GR- L
L
O
5A ABS NO. 4
I15
IGNITION SW
ACC
IG1
IG2
ST2
AM1
AM2
W- G
W- R
B- O
B- W
W- L
IF1
15A PWR OUTLET NO. 1
5A ECU- ACC
15A CIG
10A SRS- ACC
15A RADIO
7. 5A ECU- B
7. 5A DOME
10A AM2
30A DCC
15A IG2
IG2 RELAY
15A DOOR NO. 2
5A ALT- S
15A HAZ
5A SRS WRN
10A HORN
25A A/F
15A EFI NO. 1
EFI RELAY
7. 5A EFI NO. 2
40A MAIN
B
G- W
(*3)
R- W
(*4)
15A HEAD RH LWR (*3)
15A HEAD RH (*4)
R- B
15A HEAD LH LWR (*3)
15A HEAD LH (*4)
B- R
HEAD RELAY
R- L
E1
EA1
7. 5A DRL
DRL NO. 2 RELAY

POWER SOURCE

SERVICE HINTS

HEAD RELAY

1-2 : Closed with the light control SW at **HEAD** position or the dimmer SW at **FLASH** position

TAIL RELAY

5-3 : Closed with the light control SW at **TAIL** or **HEAD** position

I15 IGNITION SW

2-3 : Closed with the ignition key at **ACC** or **ON** position
2-4 : Closed with the ignition key at **ON** or **ST** position
7-6 : Closed with the ignition key at **ON** or **ST** position
7-8 : Closed with the ignition key at **ST** position

: PARTS LOCATION

Code		See Page	Code		See Page	Code	See Page
F6	A	44	F9	D	44	I15	47 (Column Shift)
F7	B	44	F10	E	44		49 (Floor Shift)
F8	C	44	G2		44		

: RELAY BLOCKS

Code	See Page	Relay Blocks (Relay Block Location)
2	24	Engine Room R/B No.2 (Engine Compartment Right)
3	24	Engine Room R/B No.3 (Near the Radiator Fan)
5	25	Engine Room R/B No.5 (Engine Compartment Left)

: JUNCTION BLOCK AND WIRE HARNESS CONNECTOR

Code	See Page	Junction Block and Wire Harness (Connector Location)
1C	27	Cowl Wire and Driver Side J/B (Lower Finish Panel)
1G	27	Engine Room Main Wire and Driver Side J/B (Lower Finish Panel)
1J		
1K		
2C	30	Engine Room Main Wire and Engine Room J/B (Engine Compartment Left)
2E		
2G	30	Engine Wire and Engine Room J/B (Engine Compartment Left)
2H	30	Engine Room Main Wire and Engine Room J/B (Engine Compartment Left)

: CONNECTOR JOINING WIRE HARNESS AND WIRE HARNESS

Code	See Page	Joining Wire Harness and Wire Harness (Connector Location)
EA1	54	Cowl Wire and Engine Room No.2 Wire (Near the Engine Room R/B No.2)
IF1	56 (Column Shift)	Engine Room Main Wire and Cowl Wire (Left Side of Instrument Panel)
	60 (Floor Shift)	

: SPLICE POINTS

Code	See Page	Wire Harness with Splice Points	Code	See Page	Wire Harness with Splice Points
E1	54	Engine Room No.2 Wire			

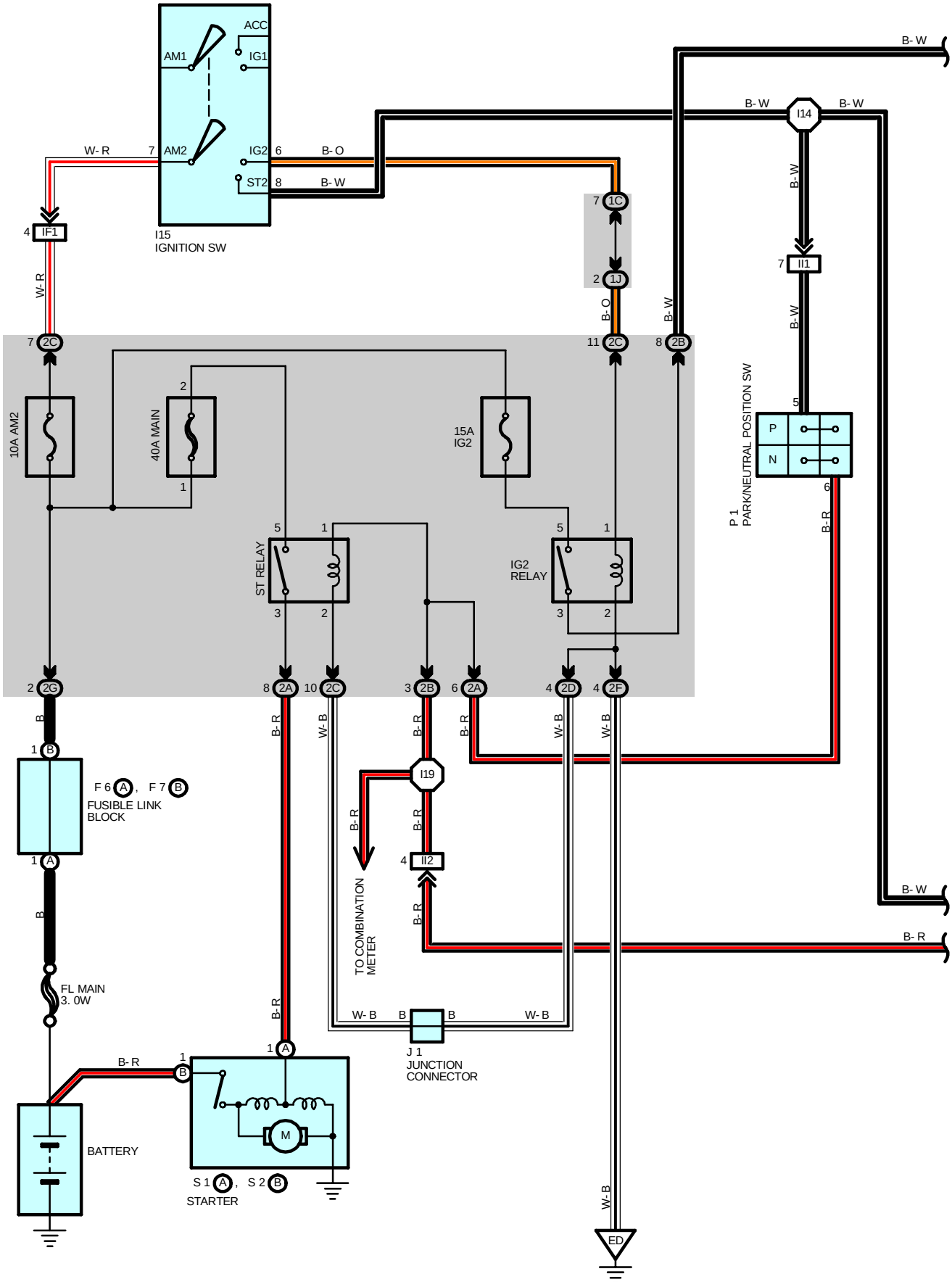
ACC
AM1
IG1
AM2
IG2
ST2
I15
IGNITION SW
W- R
B- O
B- W
IF1
1C
1J
2C
2B
I14
II1
10A AM2
40A MAIN
15A
IG2
ST RELAY
IG2
RELAY
P
N
P 1
PARK/NEUTRAL POSITION SW
2G
2A
2D
2F
B- R
W- B
I19
II2
TO COMBINATION
METER
F 6 A , F 7 B
FUSIBLE LINK
BLOCK
FL MAIN
3. 0W
J 1
JUNCTION
CONNECTOR
BATTERY
S 1 A , S 2 B
STARTER
M
ED

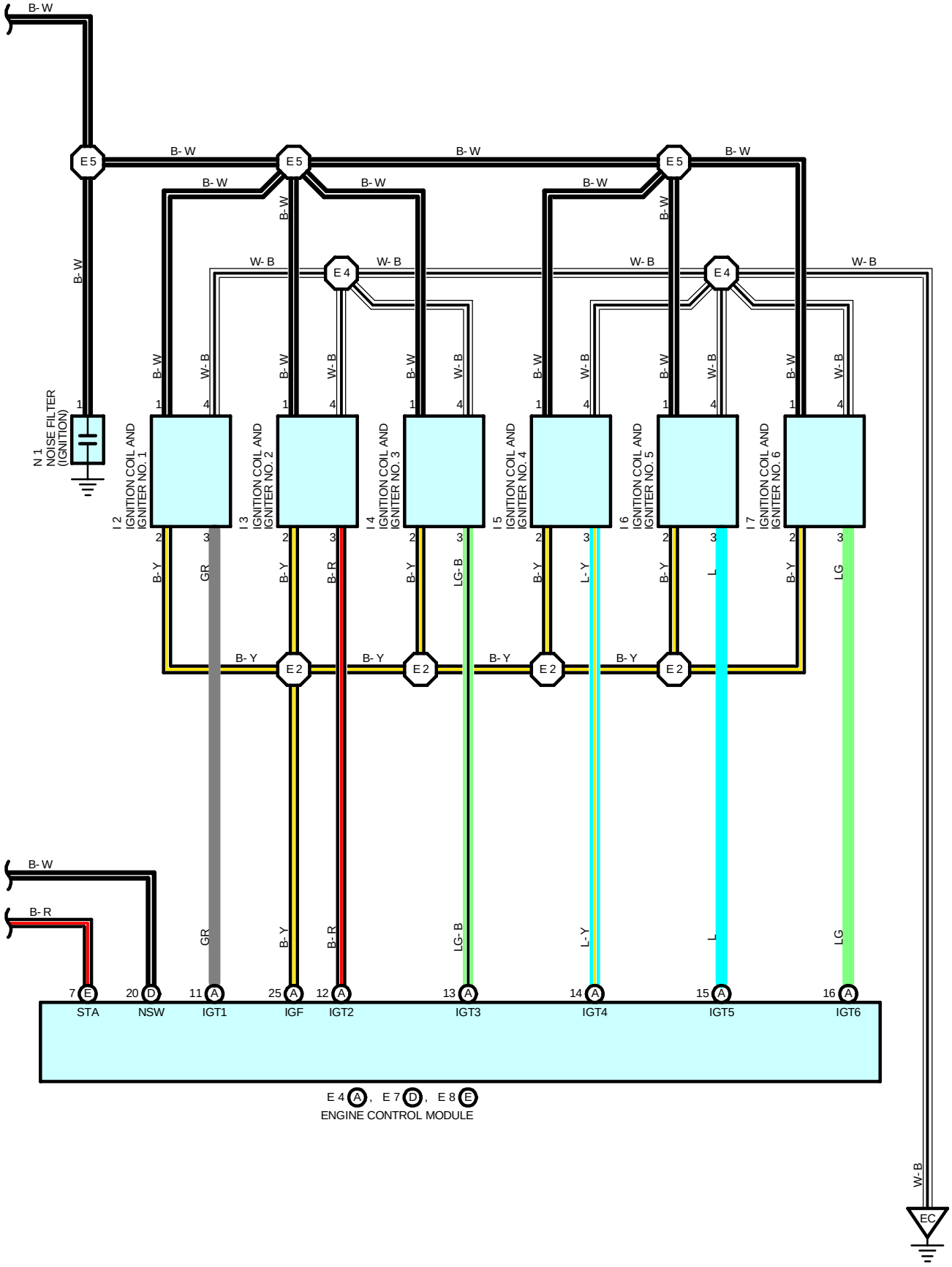
B- W
E 5
E 4
E 2
N 1
NOISE FILTER
(IGNITION)
I 2
IGNITION COIL AND
IGNITER NO. 1
I 3
IGNITION COIL AND
IGNITER NO. 2
I 4
IGNITION COIL AND
IGNITER NO. 3
I 5
IGNITION COIL AND
IGNITER NO. 4
I 6
IGNITION COIL AND
IGNITER NO. 5
I 7
IGNITION COIL AND
IGNITER NO. 6
W- B
B- Y
GR
B- R
LG- B
L- Y
L
LG
B- R
7 E STA
20 D NSW
11 A IGT1
25 A IGF
12 A IGT2
13 A IGT3
14 A IGT4
15 A IGT5
16 A IGT6
E 4 A , E 7 D , E 8 E
ENGINE CONTROL MODULE
EC

STARTING AND IGNITION

SERVICE HINTS

I15 IGNITION SW

7-6 : Closed with the ignition SW at **ON** or **ST** position
7-8 : Closed with the ignition SW at **ST** position

P1 PARK/NEUTRAL POSITION SW

5-6 : Closed with the A/T shift lever in **P** or **N** position

S1 (A), S2 (B) STARTER

Points closed with the Park/Neutral position SW at **P** or **N** position and the ignition SW at **ST** position

○ : PARTS LOCATION

Code		See Page	Code	See Page	Code		See Page
E4	A	46 (Column Shift)	I2	45	J1		47 (Column Shift)
		48 (Floor Shift)	I3	45			49 (Floor Shift)
E7	D	46 (Column Shift)	I4	45	N1		45
		48 (Floor Shift)	I5	45	P1		45
E8	E	46 (Column Shift)	I6	45	S1	A	45
		48 (Floor Shift)	I7	45	S2	B	45
F6	A	44	I15	47 (Column Shift)			
F7	B	44		49 (Floor Shift)			

: JUNCTION BLOCK AND WIRE HARNESS CONNECTOR

Code	See Page	Junction Block and Wire Harness (Connector Location)
1C	27	Cowl Wire and Driver Side J/B (Lower Finish Panel)
1J	27	Engine Room Main Wire and Driver Side J/B (Lower Finish Panel)
2A	30	Engine Wire and Engine Room J/B (Engine Compartment Left)
2B		
2C	30	Engine Room Main Wire and Engine Room J/B (Engine Compartment Left)
2D		
2F		
2G	30	Engine Wire and Engine Room J/B (Engine Compartment Left)

: CONNECTOR JOINING WIRE HARNESS AND WIRE HARNESS

Code	See Page	Joining Wire Harness and Wire Harness (Connector Location)
IF1	56 (Column Shift)	Engine Room Main Wire and Cowl Wire (Left Side of Instrument Panel)
	60 (Floor Shift)	
II1	58 (Column Shift)	Engine Wire and Cowl Wire (Behind the Glove Box)
	62 (Floor Shift)	
II2	58 (Column Shift)	
	62 (Floor Shift)	

: GROUND POINTS

Code	See Page	Ground Points Location
EC	54	Rear Side of Surge Tank
ED	54	Front Side of Left Fender

: SPLICE POINTS

Code	See Page	Wire Harness with Splice Points	Code	See Page	Wire Harness with Splice Points
E2	54	Engine Wire	I14	62 (Floor Shift)	Cowl Wire
E4			I19	58 (Column Shift)	Engine Wire
E5				62 (Floor Shift)	
I14	58 (Column Shift)	Cowl Wire			

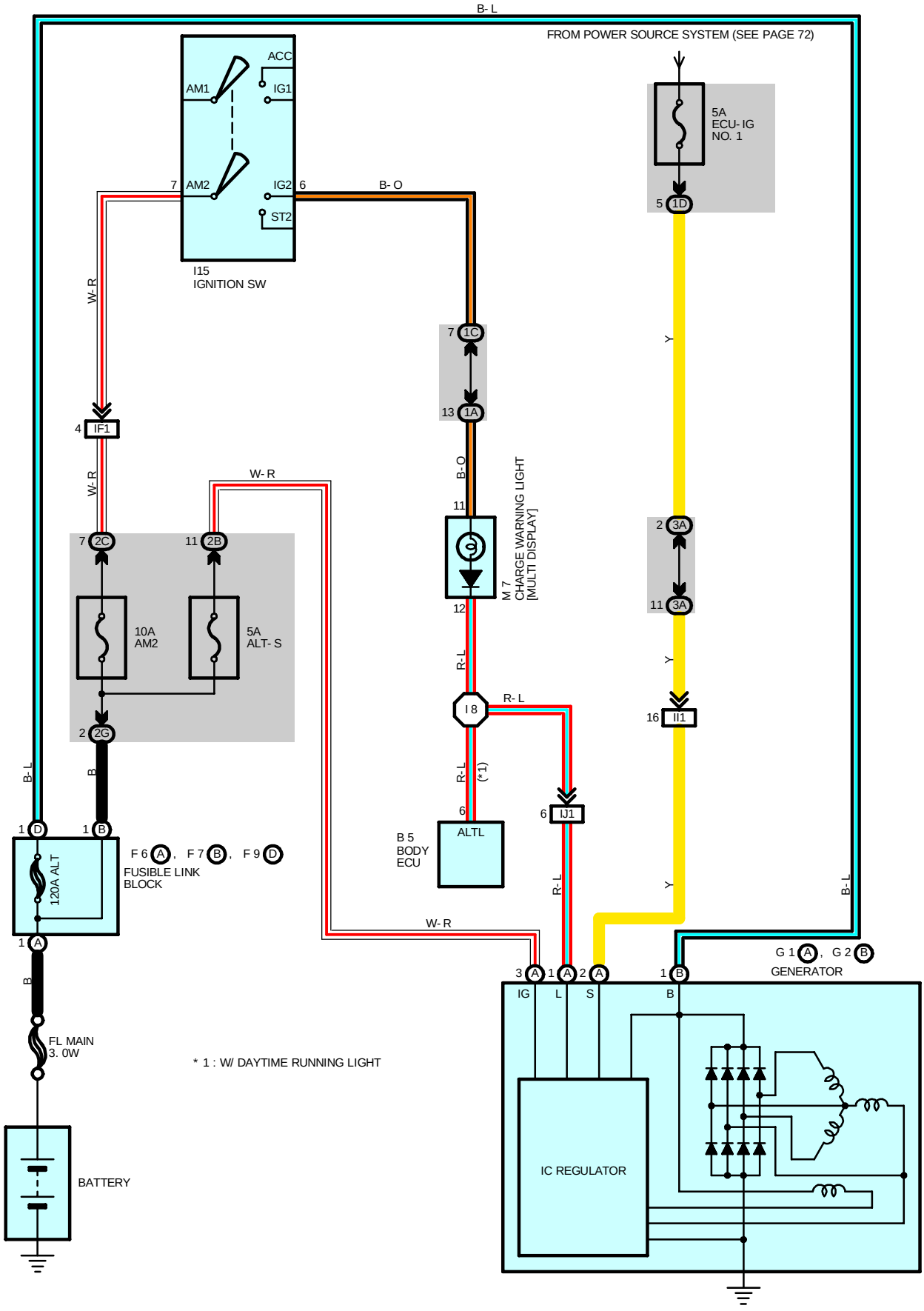
B- L
FROM POWER SOURCE SYSTEM (SEE PAGE 72)
ACC
AM1
IG1
7 AM2
IG2 6
ST2
I15
IGNITION SW
B- O
5A
ECU- IG
NO. 1
5 1D
W- R
7 1C
13 1A
Y
4 IF1
W- R
W- R
B- O
11
M 7
CHARGE WARNING LIGHT
[MULTI DISPLAY]
2 3A
11 3A
7 2C
11 2B
12
10A
AM2
5A
ALT- S
R- L
I 8
R- L
16 II1
Y
2 2G
B- L
B
R- L
(*1)
6
6 IJ1
B 5
BODY
ECU
ALTL
R- L
Y
B- L
1 D
1 B
F 6 A , F 7 B , F 9 D
FUSIBLE LINK
BLOCK
120A ALT
W- R
G 1 A , G 2 B
GENERATOR
3 A 1 A 2 A
1 B
IG
L
S
B
1 A
B
FL MAIN
3. 0W
* 1 : W/ DAYTIME RUNNING LIGHT
IC REGULATOR
BATTERY

SERVICE HINTS

G1 (A) GENERATOR

(A) 3-GROUND : **13.9**- **15.1** volts with the engine running at **2000** rpm and **25**˚C (**77**˚F)
13.5- **14.3** volts with the engine running at **5000** rpm and **115**˚C (**239**˚F)

(A) 1-GROUND : **0**- **4** volts with the ignition SW at **ON** position and the engine not running

: PARTS LOCATION

Code		See Page	Code		See Page	Code	See Page
B5		46 (Column Shift)	F9	D	44	I15	49 (Floor Shift)
		48 (Floor Shift)	G1	A	44	M7	47 (Column Shift)
F6	A	44	G2	B	44		49 (Floor Shift)
F7	B	44	I15		47 (Column Shift)		

: JUNCTION BLOCK AND WIRE HARNESS CONNECTOR

Code	See Page	Junction Block and Wire Harness (Connector Location)
1A	26	Instrument Panel Wire and Driver Side J/B (Lower Finish Panel)
1C	27	Cowl Wire and Driver Side J/B (Lower Finish Panel)
1D		
2B	30	Engine Wire and Engine Room J/B (Engine Compartment Left)
2C	30	Engine Room Main Wire and Engine Room J/B (Engine Compartment Left)
2G	30	Engine Wire and Engine Room J/B (Engine Compartment Left)
3A	34	Cowl Wire and J/B No.3 (Left Kick Panel)

: CONNECTOR JOINING WIRE HARNESS AND WIRE HARNESS

Code	See Page	Joining Wire Harness and Wire Harness (Connector Location)
IF1	56 (Column Shift)	Engine Room Main Wire and Cowl Wire (Left Side of Instrument Panel)
	60 (Floor Shift)	
II1	58 (Column Shift)	Engine Wire and Cowl Wire (Behind the Glove Box)
	62 (Floor Shift)	
IJ1	58 (Column Shift)	Engine Wire and Instrument Panel Wire (Right Kick Panel)
	62 (Floor Shift)	

: SPLICE POINTS

Code	See Page	Wire Harness with Splice Points	Code	See Page	Wire Harness with Splice Points
I8	58 (Column Shift)	Instrument Panel Wire	I8	62 (Floor Shift)	Instrument Panel Wire

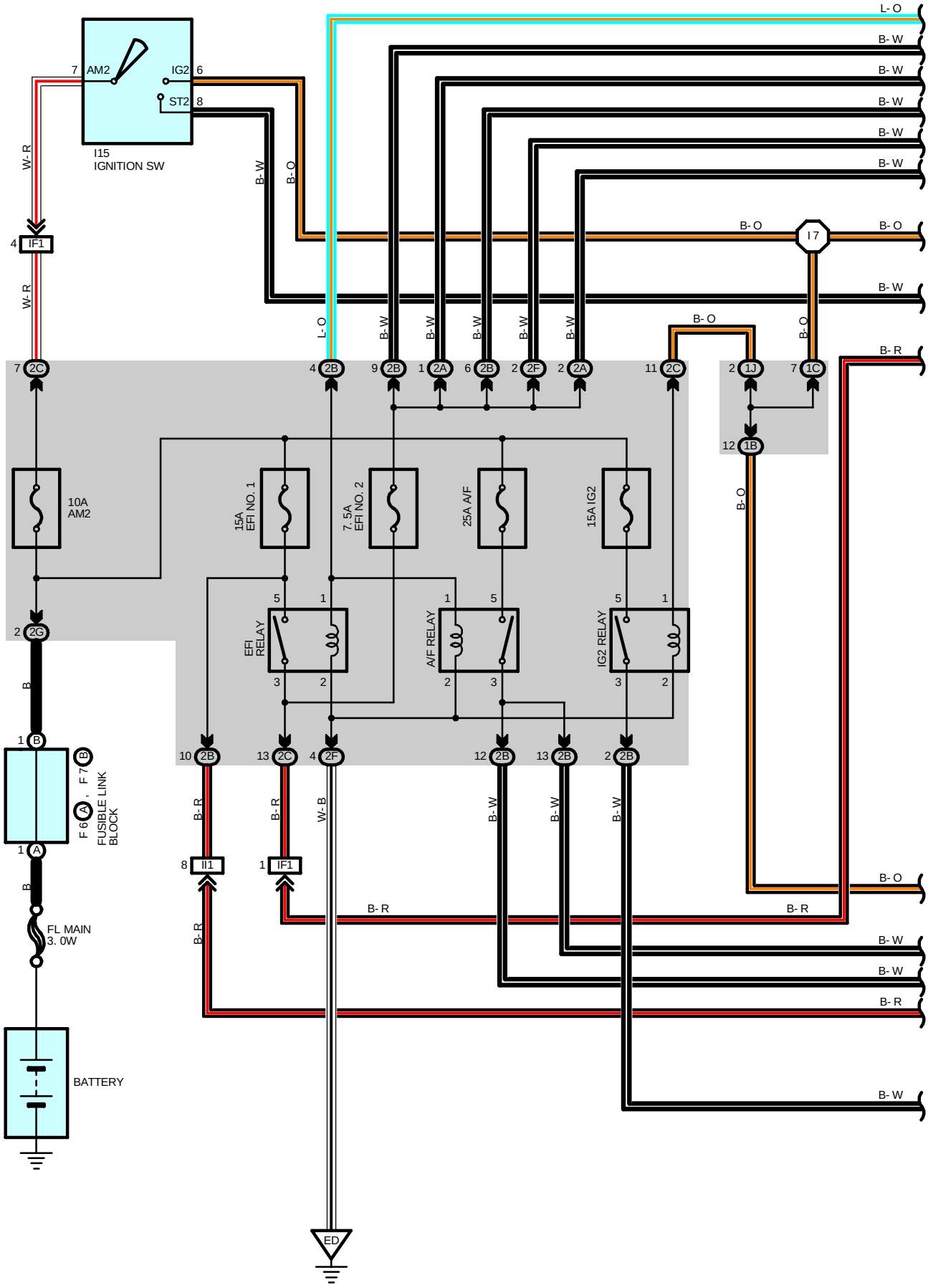
I15
IGNITION SW
AM2
IG2
ST2
IF1
I7
10A
AM2
15A
EFI NO. 1
7.5A
EFI NO. 2
25A A/F
15A IG2
EFI
RELAY
A/F RELAY
IG2 RELAY
FUSIBLE LINK
BLOCK
FL MAIN
3. 0W
BATTERY
II1
ED
L- O
B- W
B- O
B- R
W- R
W- B

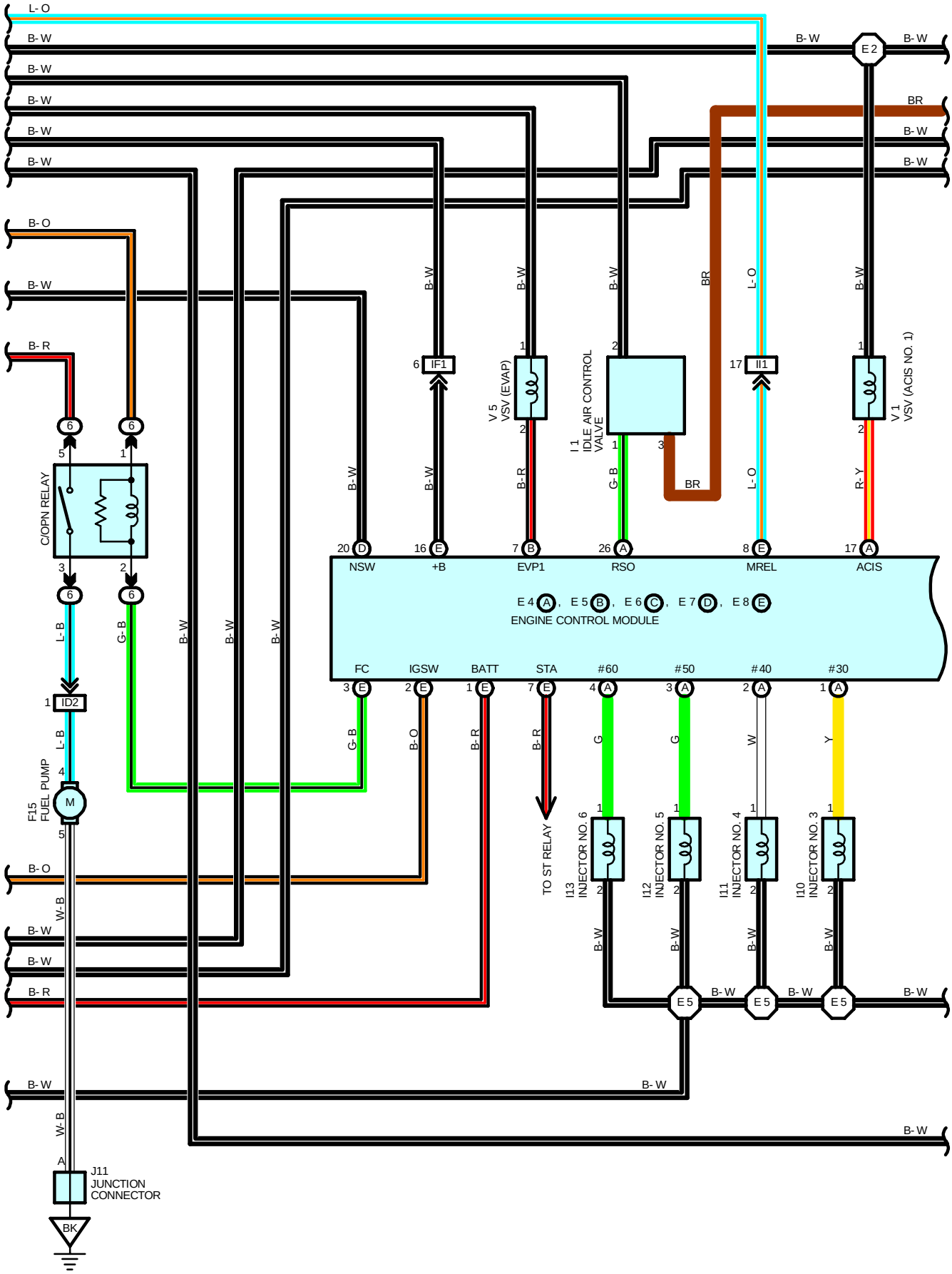
L- O
B- W
B- O
B- R
BR
C/OPN RELAY
F15
FUEL PUMP
ID2
M
J11
JUNCTION
CONNECTOR
BK
W- B
L- B
G- B
B- O
B- R
G
W
Y
R- Y
L- O
E2
E5
IF1
II1
V5
VSV (EVAP)
I1
IDLE AIR CONTROL
VALVE
V1
VSV (ACIS NO. 1)
NSW
+B
EVP1
RSO
MREL
ACIS
E4 A, E5 B, E6 C, E7 D, E8 E
ENGINE CONTROL MODULE
FC
IGSW
BATT
STA
#60
#50
#40
#30
TO ST RELAY
I13
INJECTOR NO. 6
I12
INJECTOR NO. 5
I11
INJECTOR NO. 4
I10
INJECTOR NO. 3

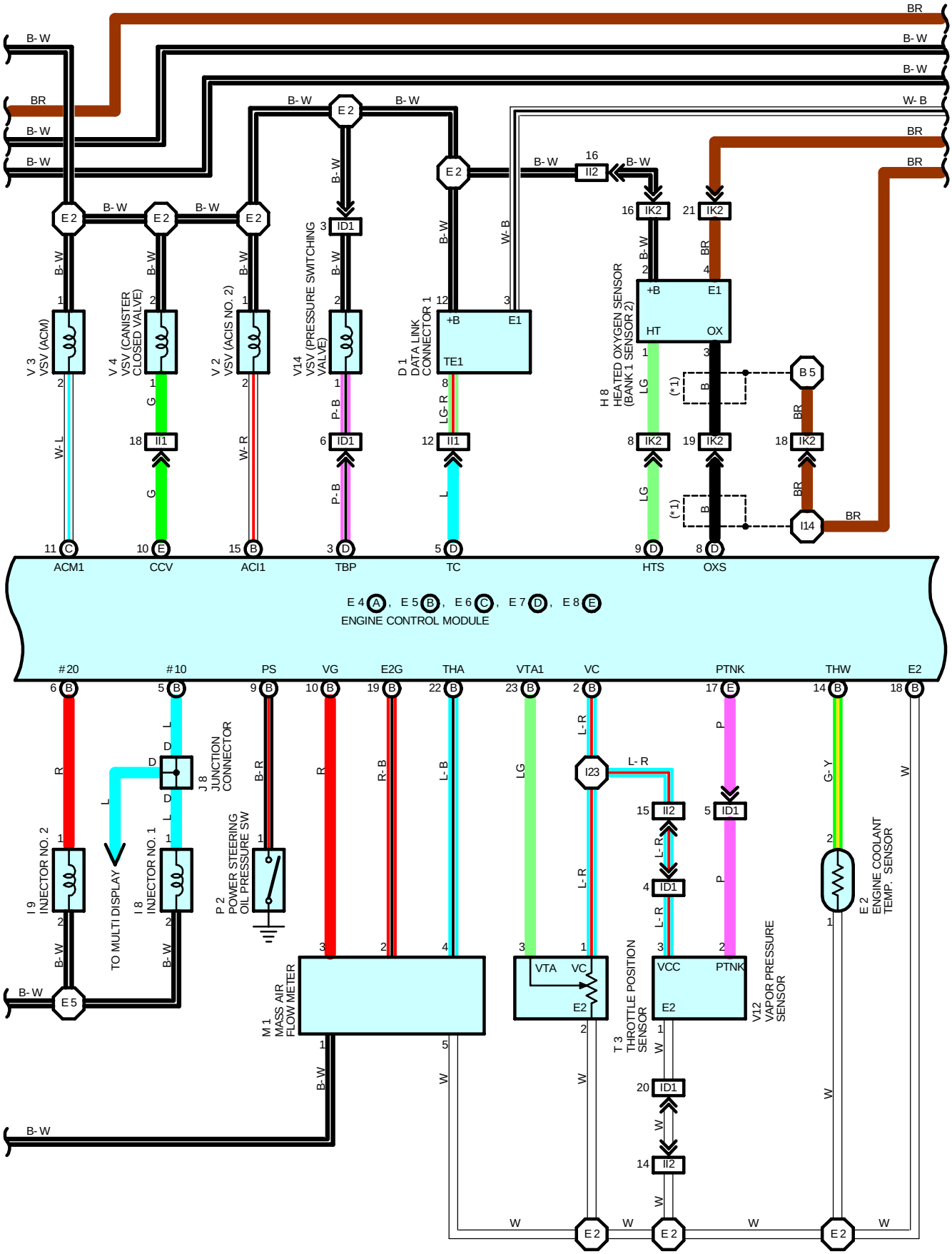
BR
B- W
W- B
E 2
16
II2
IK2
21
+B
E1
HT
OX
V 3
VSV (ACM)
V 4
VSV (CANISTER CLOSED VALVE)
V 2
VSV (ACIS NO. 2)
V14
VSV (PRESSURE SWITCHING VALVE)
D 1
DATA LINK CONNECTOR 1
TE1
H 8
HEATED OXYGEN SENSOR (BANK 1 SENSOR 2)
(*1)
B 5
I14
ID1
II1
W- L
W- R
P- B
LG- R
LG
G
L
ACM1
CCV
ACI1
TBP
TC
HTS
OXS
E 4 A , E 5 B , E 6 C , E 7 D , E 8 E
ENGINE CONTROL MODULE
#20
#10
PS
VG
E2G
THA
VTA1
VC
PTNK
THW
E2
I 9
INJECTOR NO. 2
I 8
INJECTOR NO. 1
TO MULTI DISPLAY
J 8
JUNCTION CONNECTOR
P 2
POWER STEERING OIL PRESSURE SW
M 1
MASS AIR FLOW METER
I23
T 3
THROTTLE POSITION SENSOR
VTA
VCC
V12
VAPOR PRESSURE SENSOR
E 2
ENGINE COOLANT TEMP. SENSOR
E 5
B- R
R- B
L- B
L- R
G- Y
P
W

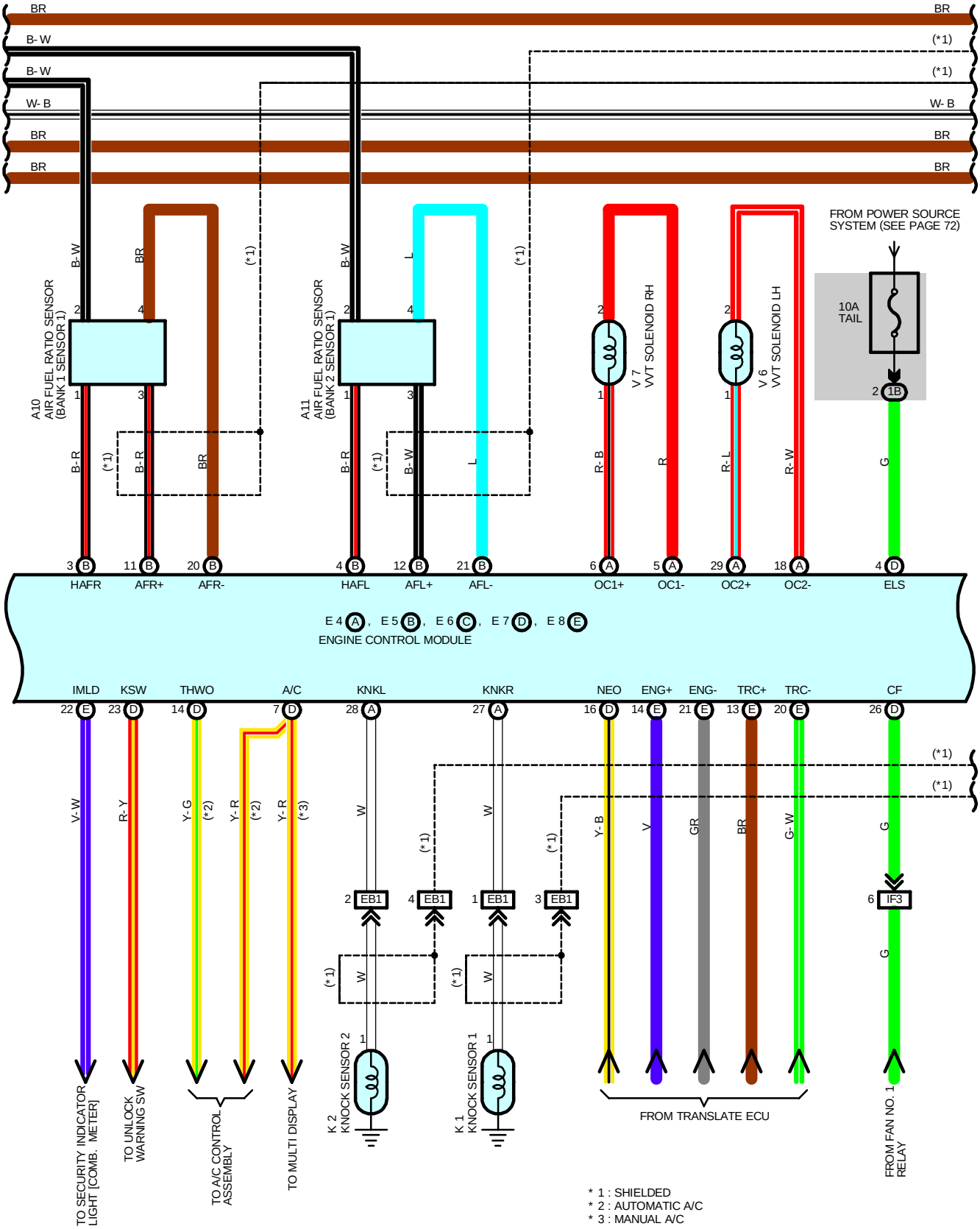
BR
B- W
W- B
(*1)
A10
AIR FUEL RATIO SENSOR
(BANK 1 SENSOR 1)
A11
AIR FUEL RATIO SENSOR
(BANK 2 SENSOR 1)
V 7
VVT SOLENOID RH
V 6
VVT SOLENOID LH
FROM POWER SOURCE
SYSTEM (SEE PAGE 72)
10A
TAIL
1B
HAFR
AFR+
AFR-
HAFL
AFL+
AFL-
OC1+
OC1-
OC2+
OC2-
ELS
E 4 A , E 5 B , E 6 C , E 7 D , E 8 E
ENGINE CONTROL MODULE
IMLD
KSW
THWO
A/C
KNKL
KNKR
NEO
ENG+
ENG-
TRC+
TRC-
CF
EB1
IF3
K 2
KNOCK SENSOR 2
K 1
KNOCK SENSOR 1
TO SECURITY INDICATOR
LIGHT [COMB. METER]
TO UNLOCK
WARNING SW
TO A/C CONTROL
ASSEMBLY
TO MULTI DISPLAY
FROM TRANSLATE ECU
FROM FAN NO. 1
RELAY
* 1 : SHIELDED
* 2 : AUTOMATIC A/C
* 3 : MANUAL A/C

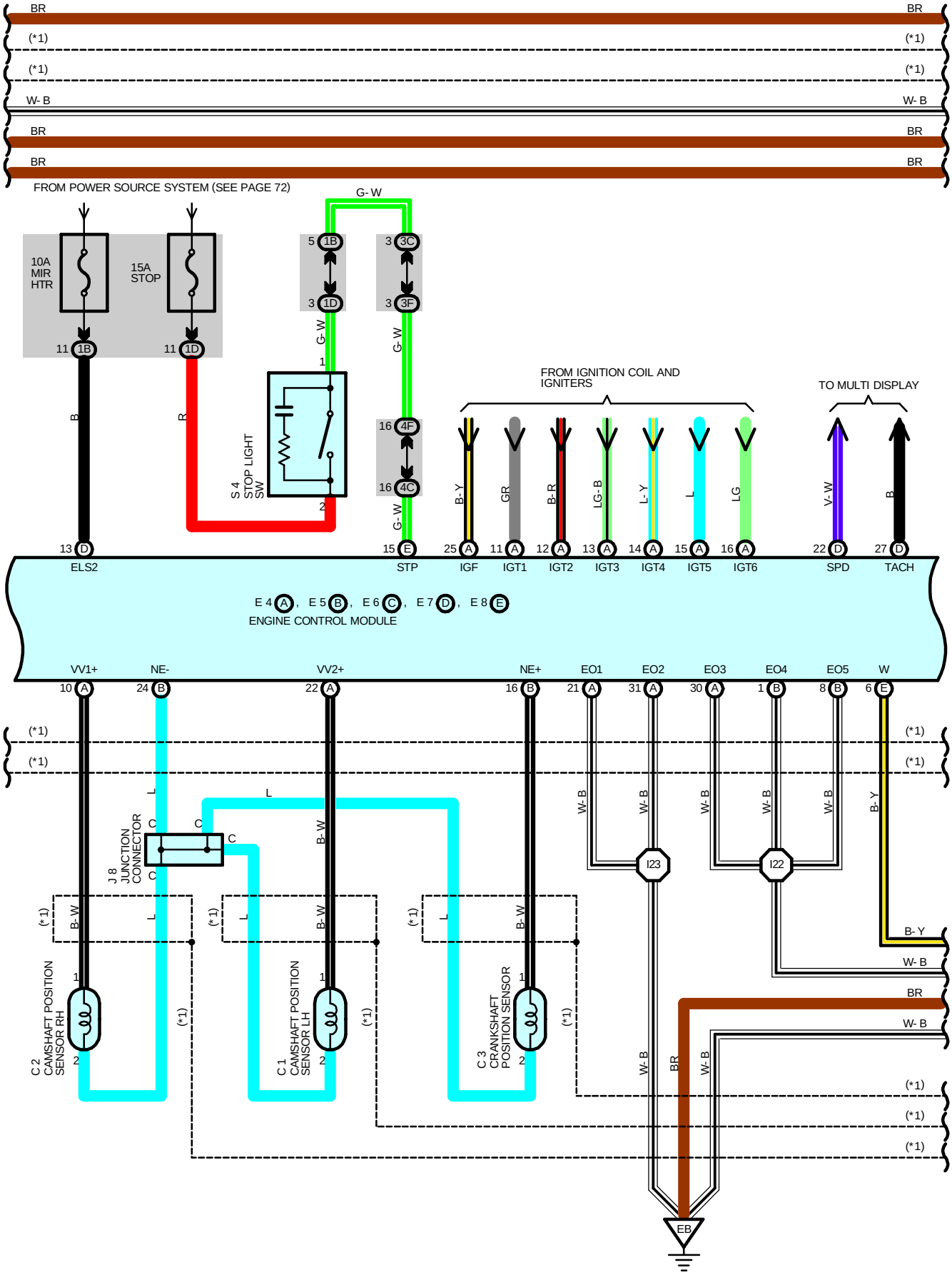
BR
(*1)
W- B
FROM POWER SOURCE SYSTEM (SEE PAGE 72)
10A MIR HTR
15A STOP
G- W
S 4 STOP LIGHT SW
FROM IGNITION COIL AND IGNITERS
TO MULTI DISPLAY
ELS2
STP
IGF
IGT1
IGT2
IGT3
IGT4
IGT5
IGT6
SPD
TACH
E 4 (A), E 5 (B), E 6 (C), E 7 (D), E 8 (E)
ENGINE CONTROL MODULE
VV1+
NE-
VV2+
NE+
EO1
EO2
EO3
EO4
EO5
W
J 8 JUNCTION CONNECTOR
C 2 CAMSHAFT POSITION SENSOR RH
C 1 CAMSHAFT POSITION SENSOR LH
C 3 CRANKSHAFT POSITION SENSOR
I23
I22
EB

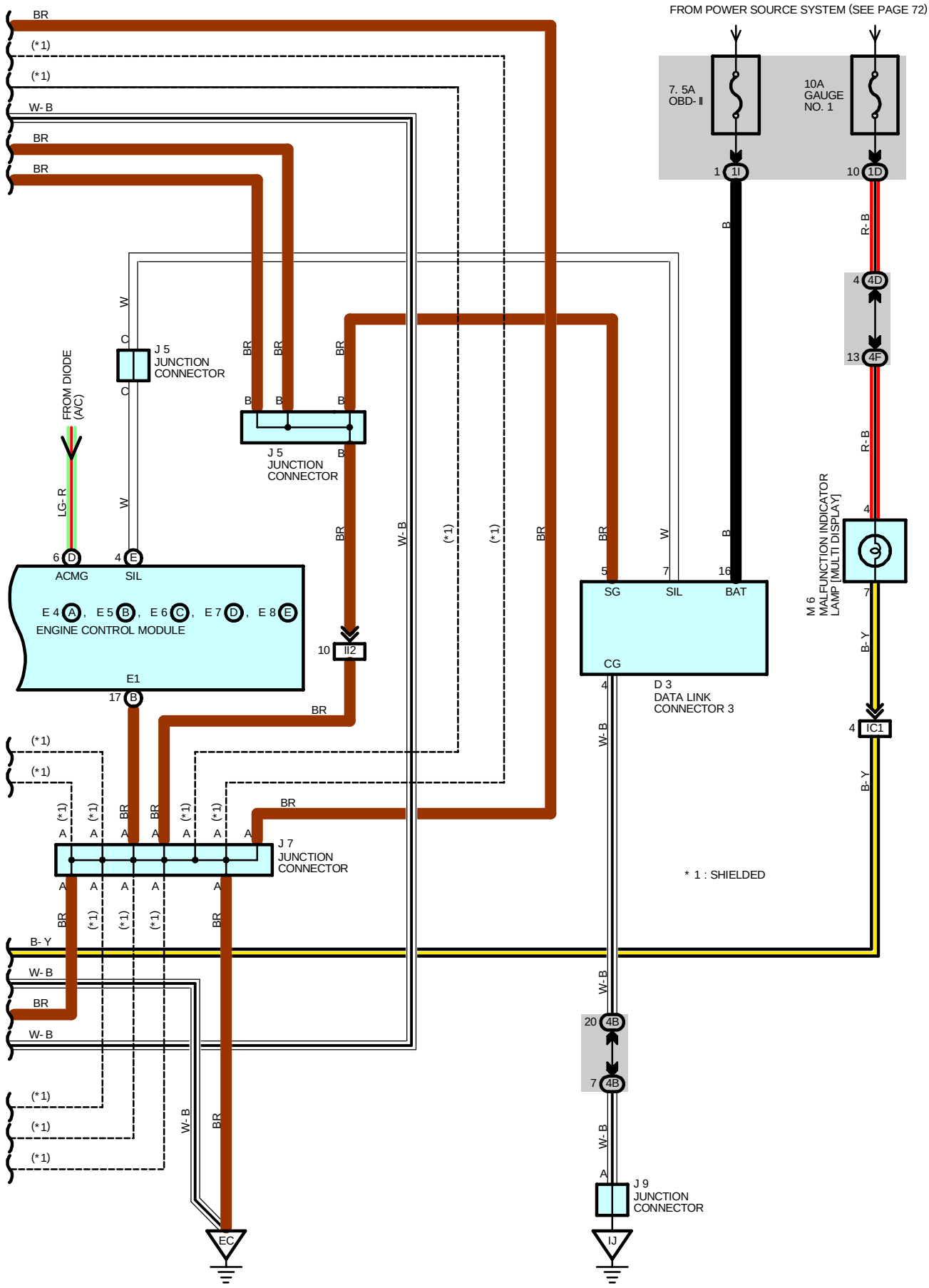
FROM POWER SOURCE SYSTEM (SEE PAGE 72)
7. 5A
OBD-Ⅱ
10A
GAUGE
NO. 1
1 1I
10 1D
B
R-B
4 4D
13 4F
R-B
4
7
B-Y
4 IC1
B-Y
M 6
MALFUNCTION INDICATOR
LAMP [MULTI DISPLAY]
5 SG
7 SIL
16 BAT
CG
4
D 3
DATA LINK
CONNECTOR 3
W-B
W-B
20 4B
7 4B
W-B
A
J 9
JUNCTION
CONNECTOR
IJ
* 1 : SHIELDED
BR
(*1)
W-B
W
C
J 5
JUNCTION
CONNECTOR
C
W
FROM DIODE
(A/C)
LG-R
6 D
ACMG
4 E
SIL
E4 A, E5 B, E6 C, E7 D, E8 E
ENGINE CONTROL MODULE
E1
17 B
10 II2
BR
B
J 5
JUNCTION
CONNECTOR
B
A
J 7
JUNCTION
CONNECTOR
EC

SYSTEM OUTLINE

This system utilizes an engine control module and maintains overall control of the engine, transmission and so on. An outline of the engine control is explained here.

1. INPUT SIGNALS

(1) Engine coolant temp. signal circuit

The engine coolant temp. sensor detects the engine coolant temp. and has a built-in thermistor with a resistance which varies according to the water temp. is input into TERMINAL THW of the engine control module as a control signal.

(2) Intake air temp. signal circuit

The intake air temp. sensor is installed in the mass air flow meter and detects the intake air temp., which is input as a control signal into TERMINAL THA of the engine control module.

(3) RPM signal system

Camshaft position and crankshaft position are detected by the camshaft position sensor and crankshaft position sensor. The camshaft position is input as a control signal to TERMINAL VV2+ of the engine control module, and the engine RPM is input into TERMINAL NE+.

(4) Throttle signal circuit

The throttle position sensor detects the throttle valve opening angle as a control signal, which is input into TERMINAL VTA1 of the engine control module.

(5) Vehicle speed signal system

The vehicle speed sensor, installed inside the transmission, detects the vehicle speed and inputs a control signal into TERMINAL SPD of the engine control module.

(6) Park/Neutral position SW signal system

The Park/Neutral position SW detects whether the shift position is in neutral, parking or not, and inputs a control signal into TERMINAL STA of the engine control module.

(7) A/C SW signal system

The A/C amplifier inputs the A/C operations into TERMINAL A/C of the engine control module as a control signal.

(8) Battery signal circuit

Voltage is always supplies to TERMINAL BATT of the engine control module.
If you turn on the ignition SW, the current goes from TERMINAL MREL of the engine control module to the EFI relay and put on the relay, and the voltage related to the engine control module operation is supplied to TERMINAL +B of the engine control module through the EFI relay.

(9) Intake air volume signal circuit

Intake air volume is detected by the mass air flow meter and a signal is input into TERMINAL VG of the engine control module as a control signal.

(10) NSW signal circuit

To confirm whether the engine is cranking, the voltage applied to the starter motor during cranking is detected and the signal is input into TERMINAL NSW of the engine control module as a control signal.

(11) Engine knock signal circuit

Engine knocking is detected by the knock sensor 1 and 2, then the signals are input into TERMINALS KNKR and KNKL of the engine control module as a control signal.

(12) Air fuel ratio signal system

The air fuel ratio is detected and input as a control signal into TERMINALS AFL+, AFR+ of the engine control module.

2. CONTROL SYSTEM

∗ SFI (Sequential multiport Fuel Injection) system

The SFI system monitors the engine condition through the signals, which are input from each sensor (Input signals (1) to (12)). The best fuel injection volume is decided based on this data and the program memorized by the engine control module, and the control signal is output to TERMINALS #10, #20, #30, #40, #50 and #60 of the engine control module to operate the injector (Inject the fuel). The SFI system produces control of fuel injection operation by the engine control module in response to the driving conditions.

∗ ESA (Electronic Spark Advance) system

The ESA system monitors the engine condition through the signals, which are input to the engine control module from each sensor (Input signals from 1, 3, 11). The best ignition timing is decided according to this data and the memorized data in the engine control module and the control signal is output to TERMINALS IGT1, IGT2, IGT3, IGT4, IGT5 and IGT6. This signal controls the igniter to provide the best ignition timing for the driving conditions.

∗ Idle air control system

The idle air control system (Rotary solenoid type) increases the rpm and provides idle stability for fast idle-up when the engine is cold, and when the idle speed has dropped due to electrical load and so on, the engine control module evaluates the signals from each sensor (Input signals from 1, 3, 4, 7, 8), current is output to TERMINAL RSO to control idle air control valve.

∗ ACIS (Acoustic Control Induction System)

ACIS includes a valve in the bulkhead separating the surge tank into two parts. This valve is opened and closed in accordance with the driving conditions to control the intake manifold length in two stages for increased engine output in all ranges from low to high speeds.

The engine control module judges the engine speed by the signals ((3), (4)) from each sensor and outputs signals to the TERMINALS ACIS and ACI1 to control the VSV (ACIS No.1 or No.2).

3. DIAGNOSIS SYSTEM

With the diagnosis system, when there is a malfunction in the engine control module signal system, the malfunctioning system is recorded in the memory.

4. FAIL-SAFE SYSTEM

When a malfunction occurs in any systems, if there is a possibility of engine trouble being caused by continued control based on the signals from that system, the fail-safe system either controls the system by using data (Standard values) recorded in the engine control module memory or else stops the engine.

SERVICE HINTS

C/OPN RELAY

3-5 : Closed with the starter running and engine running

EFI RELAY

5-3 : Closed with the ignition SW at **ON** or **ST** position

E4 (A), E5 (B), E6 (C), E7 (D), E8 (E) ENGINE CONTROL MODULE

Voltage at engine control module wiring connector

BATT-E1 : Always **9.0**- **14.0** volts
+B-E1 : **9.0**- **14.0** volts (Ignition SW at **ON** position)
VC-E1 : Always **4.5**- **5.5** volts (Ignition SW at **ON** position)
VTA1-E1 : **0.3**- **0.8** volts (Ignition SW on and throttle valve fully closed)
3.2- **4.9** volts (Ignition SW on and throttle valve fully open)
VG-E1 : **4.0**- **5.5** volts (Ignition SW at **ON** position)
THA-E1 : **0.5**- **3.4** volts (Ignition SW on and intake air temp. **20**˚C,**68**˚F)
THW-E1 : **0.2**- **1.0** volts (Engine idling and coolant temp. **80**˚C,**176**˚F)
IGF-E1 : **4.5**- **5.5** volts (Ignition SW at **ON** position)
Pulse generation (Engine idling)
STA-E1 : **9.0**- **14.0** volts (Ignition SW on and other shift position in **P** or **N** position)
Below **3.0** volts (Ignition SW on and shift position in **P** or **N** position)
SPD-E1 : Pulse generation (Ignition SW on and rotate driving wheel slowly)
W-E1 : Below **3.0** volts (Malfunction indicator lamp on)
9.0- **14.0** volts (Malfunction indicator lamp off and engine running)
A/C-E1 : Below **1.5** volts (Engine idling and A/C SW on)
7.5- **14.0** volts (A/C SW off)
ACT-E1 : **9.0**- **14.0** volts (Engine idling and A/C SW on)
Below **1.5** volts (A/C SW off)
ACIS-E01 : **9.0**- **14.0** volts (Ignition SW at **ON** position)
NSW-E1 : **6.0** volts or more (Engine cranking)
RSO-E1 : Pulse generation (Engine idling and A/C operation)
KNKL, KNKR-E1 : Pulse generation (Engine idling)
HTS, HAFL, HAFR-E01 :
9.0- **14.0** volts (Ignition SW at **ON** position)
0- **3.0** volts (Engine idling)
OXS, AFL+, AFR+-E1 : Pulse generation (Maintain engine speed at **2500** rpm for two minutes after warning up)
IGT1, IGT2, IGT3, IGT4, IGT5, IGT6-E1 : Pulse generation (Engine idling)
#10, #20, #30, #40, #50, #60-E01 : **9.0**- **14.0** volts (Ignition SW at **ON** position)
Pulse generation (Engine idling)

I8, I9, I10, I11, I12, I13 INJECTOR

2-1 : Approx. **13.8** Ω

T3 THROTTLE POSITION SENSOR

2-1 : **3.75** kΩ

: PARTS LOCATION

Code	See Page	Code	See Page	Code	See Page
A10	44	F7 B	44	J9	49 (Floor Shift)
A11	44	F15	50	J11	50
C1	44	H8	47 (Column Shift)	K1	45
C2	44		49 (Floor Shift)	K2	45
C3	44	I1	45	M1	45
D1	44	I8	45	M6	47 (Column Shift)
D3	46 (Column Shift)	I9	45		49 (Floor Shift)
	48 (Floor Shift)	I10	45	P2	45
E2	44	I11	45	S4	47 (Column Shift)
E4 A	46 (Column Shift)	I12	45		49 (Floor Shift)
	48 (Floor Shift)	I13	45	T3	45
E5 B	46 (Column Shift)	I15	47 (Column Shift)	V1	45
	48 (Floor Shift)		49 (Floor Shift)	V2	45
E6 C	46 (Column Shift)	J5	47 (Column Shift)	V3	45
	48 (Floor Shift)		49 (Floor Shift)	V4	45
E7 D	46 (Column Shift)	J7	47 (Column Shift)	V5	45
	48 (Floor Shift)		49 (Floor Shift)	V6	45
E8 E	46 (Column Shift)	J8	47 (Column Shift)	V7	45
	48 (Floor Shift)		49 (Floor Shift)	V12	51
F6 A	44	J9	47 (Column Shift)	V14	51

: RELAY BLOCKS

Code	See Page	Relay Blocks (Relay Block Location)
6	42	Driver Side R/B No.6 (Left Kick Panel)

: JUNCTION BLOCK AND WIRE HARNESS CONNECTOR

Code	See Page	Junction Block and Wire Harness (Connector Location)
1B	27	Cowl Wire and Driver Side J/B (Lower Finish Panel)
1C		
1D		
1I		
1J	27	Engine Room Main Wire and Driver Side J/B (Lower Finish Panel)
2A	30	Engine Wire and Engine Room J/B (Engine Compartment Left)
2B		
2C	30	Engine Room Main Wire and Engine Room J/B (Engine Compartment Left)
2F		
2G	30	Engine Wire and Engine Room J/B (Engine Compartment Left)
3C	34	Cowl Wire and J/B No.3 (Left Kick Panel)
3F	35	Instrument Panel Wire and J/B No.3 (Left Kick Panel)
4B	38	Cowl Wire and J/B No.4 (Right Kick Panel)
4C		
4D		
4F	39	Instrument Panel Wire and J/B No.4 (Right Kick Panel)

: CONNECTOR JOINING WIRE HARNESS AND WIRE HARNESS

Code	See Page	Joining Wire Harness and Wire Harness (Connector Location)
EB1	54	Engine Wire and Sensor Wire (LH Bank of the Cylinder Head)
IC1	56 (Column Shift) 60 (Floor Shift)	Cowl Wire and Instrument Panel Wire (Left Kick Panel)
ID1	56 (Column Shift) 60 (Floor Shift)	Floor No.1 Wire and Cowl Wire (Left Kick Panel)
ID2	56 (Column Shift) 60 (Floor Shift)	
IF1	56 (Column Shift) 60 (Floor Shift)	Engine Room Main Wire and Cowl Wire (Left Side of Instrument Panel)
IF3	56 (Column Shift) 60 (Floor Shift)	
II1	58 (Column Shift) 62 (Floor Shift)	Engine Wire and Cowl Wire (Behind the Glove Box)
II2	58 (Column Shift) 62 (Floor Shift)	
IK2	58 (Column Shift) 62 (Floor Shift)	Floor No.2 Wire and Cowl Wire (Right Kick Panel)

: GROUND POINTS

Code	See Page	Ground Points Location
EB	54	Surge Tank RH
EC	54	Rear Side of Surge Tank
ED	54	Front Side of Left Fender
IJ	56 (Column Shift) 60 (Floor Shift)	Cowl Side Panel RH
BK	64	Rear Quarter Inner LH

: SPLICE POINTS

Code	See Page	Wire Harness with Splice Points	Code	See Page	Wire Harness with Splice Points
E2	54	Engine Wire	I22	58 (Column Shift) 62 (Floor Shift)	Engine Wire
E5					
I7	58 (Column Shift) 62 (Floor Shift)	Cowl Wire	I23	58 (Column Shift) 62 (Floor Shift)	
I14	58 (Column Shift) 62 (Floor Shift)		B5	64	Floor No.2 Wire

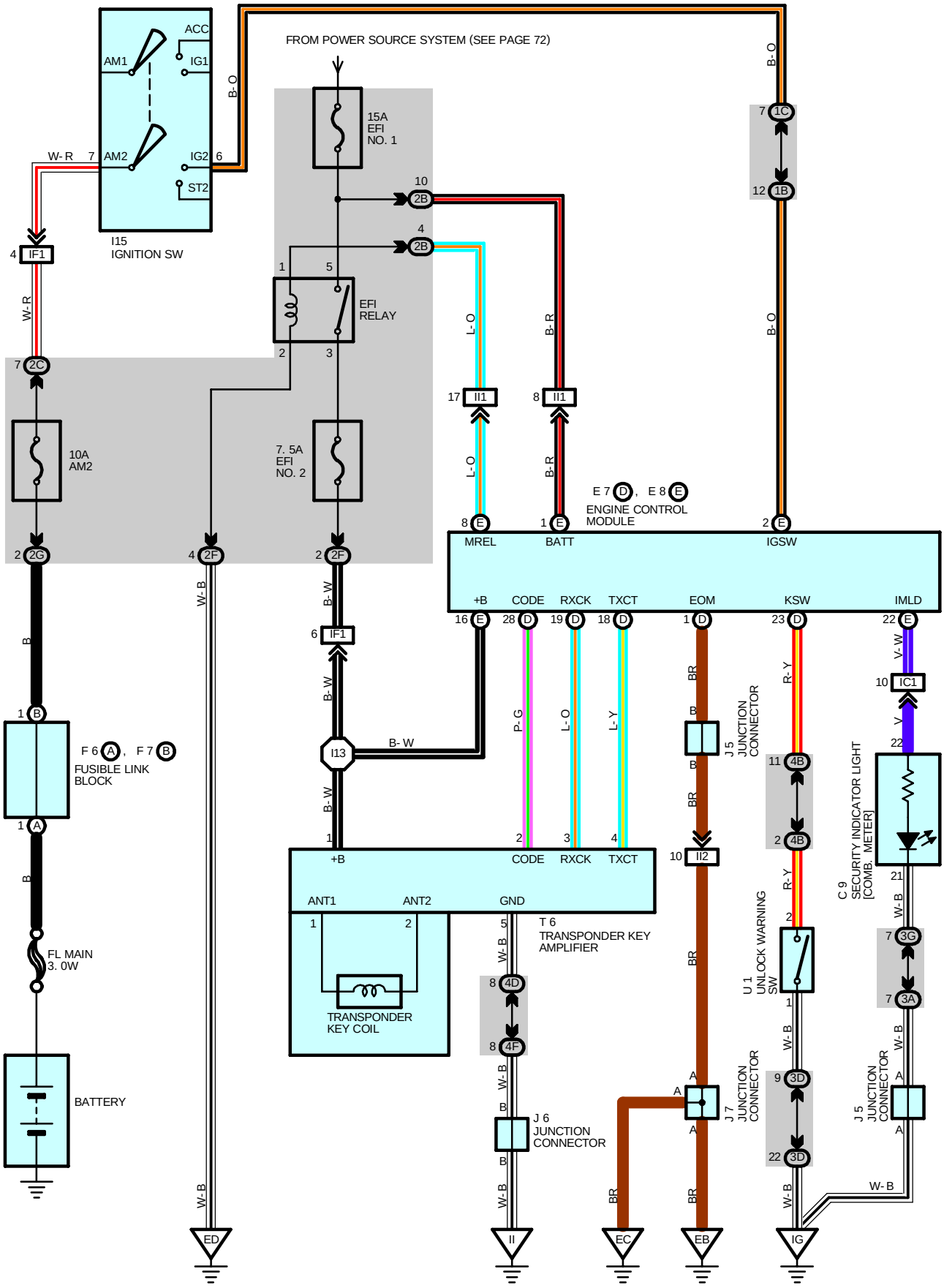
FROM POWER SOURCE SYSTEM (SEE PAGE 72)
ACC
AM1
IG1
AM2
IG2
ST2
I15
IGNITION SW
15A
EFI
NO. 1
EFI
RELAY
10A
AM2
7. 5A
EFI
NO. 2
IF1
I13
F 6 A , F 7 B
FUSIBLE LINK
BLOCK
FL MAIN
3. 0W
BATTERY
E 7 D , E 8 E
ENGINE CONTROL
MODULE
MREL
BATT
IGSW
+B
CODE
RXCK
TXCT
EOM
KSW
IMLD
ANT1
ANT2
GND
TRANSPONDER
KEY COIL
T 6
TRANSPONDER KEY
AMPLIFIER
J 6
JUNCTION
CONNECTOR
J 5
JUNCTION
CONNECTOR
J 7
JUNCTION
CONNECTOR
U 1
UNLOCK WARNING
SW
C 9
SECURITY INDICATOR LIGHT
[COMB. METER]
ED
II
EC
EB
IG

SERVICE HINTS

T6 TRANSPONDER KEY AMPLIFIER

1-GROUND : Always approx. **12** volts
5-GROUND : Always continuity

U1 UNLOCK WARNING SW

1-2 : Closed with the ignition key in cylinder

: PARTS LOCATION

Code		See Page
C9		46 (Column Shift)
		48 (Floor Shift)
E7	D	46 (Column Shift)
		48 (Floor Shift)
E8	E	46 (Column Shift)
		48 (Floor Shift)
F6	A	44

Code		See Page
F7	B	44
I15		47 (Column Shift)
		49 (Floor Shift)
J5		47 (Column Shift)
		49 (Floor Shift)
J6		47 (Column Shift)
		49 (Floor Shift)

Code	See Page
J7	47 (Column Shift)
	49 (Floor Shift)
T6	47 (Column Shift)
	49 (Floor Shift)
U1	47 (Column Shift)
	49 (Floor Shift)

: JUNCTION BLOCK AND WIRE HARNESS CONNECTOR

Code	See Page	Junction Block and Wire Harness (Connector Location)
1B	27	Cowl Wire and Driver Side J/B (Lower Finish Panel)
1C		
2B	30	Engine Wire and Engine Room J/B (Engine Compartment Left)
2C	30	Engine Room Main Wire and Engine Room J/B (Engine Compartment Left)
2F		
2G	30	Engine Wire and Engine Room J/B (Engine Compartment Left)
3A	34	Cowl Wire and J/B No.3 (Left Kick Panel)
3D		
3G	35	Instrument Panel Wire and J/B No.3 (Left Kick Panel)
4B	38	Cowl Wire and J/B No.4 (Right Kick Panel)
4D		

: CONNECTOR JOINING WIRE HARNESS AND WIRE HARNESS

Code	See Page	Joining Wire Harness and Wire Harness (Connector Location)
IC1	56 (Column Shift)	Cowl Wire and Instrument Panel Wire (Left Kick Panel)
	60 (Floor Shift)	
IF1	56 (Column Shift)	Engine Room Main Wire and Cowl Wire (Left Side of Instrument Panel)
	60 (Floor Shift)	
II1	58 (Column Shift)	Engine Wire and Cowl Wire (Behind the Glove Box)
	62 (Floor Shift)	
II2	58 (Column Shift)	
	62 (Floor Shift)	

: GROUND POINTS

Code	See Page	Ground Points Location
EB	54	Surge Tank RH
EC	54	Rear Side of Surge Tank
ED	54	Front Side of Left Fender
IG	56 (Column Shift)	Cowl Side Panel LH
	60 (Floor Shift)	
II	56 (Column Shift)	Right Kick Panel
	60 (Floor Shift)	

 **: SPLICE POINTS**

Code	See Page	Wire Harness with Splice Points	Code	See Page	Wire Harness with Splice Points
I13	58 (Column Shift)	Cowl Wire	I13	62 (Floor Shift)	Cowl Wire

HEADLIGHT (w/ DAYTIME RUNNING LIGHT)

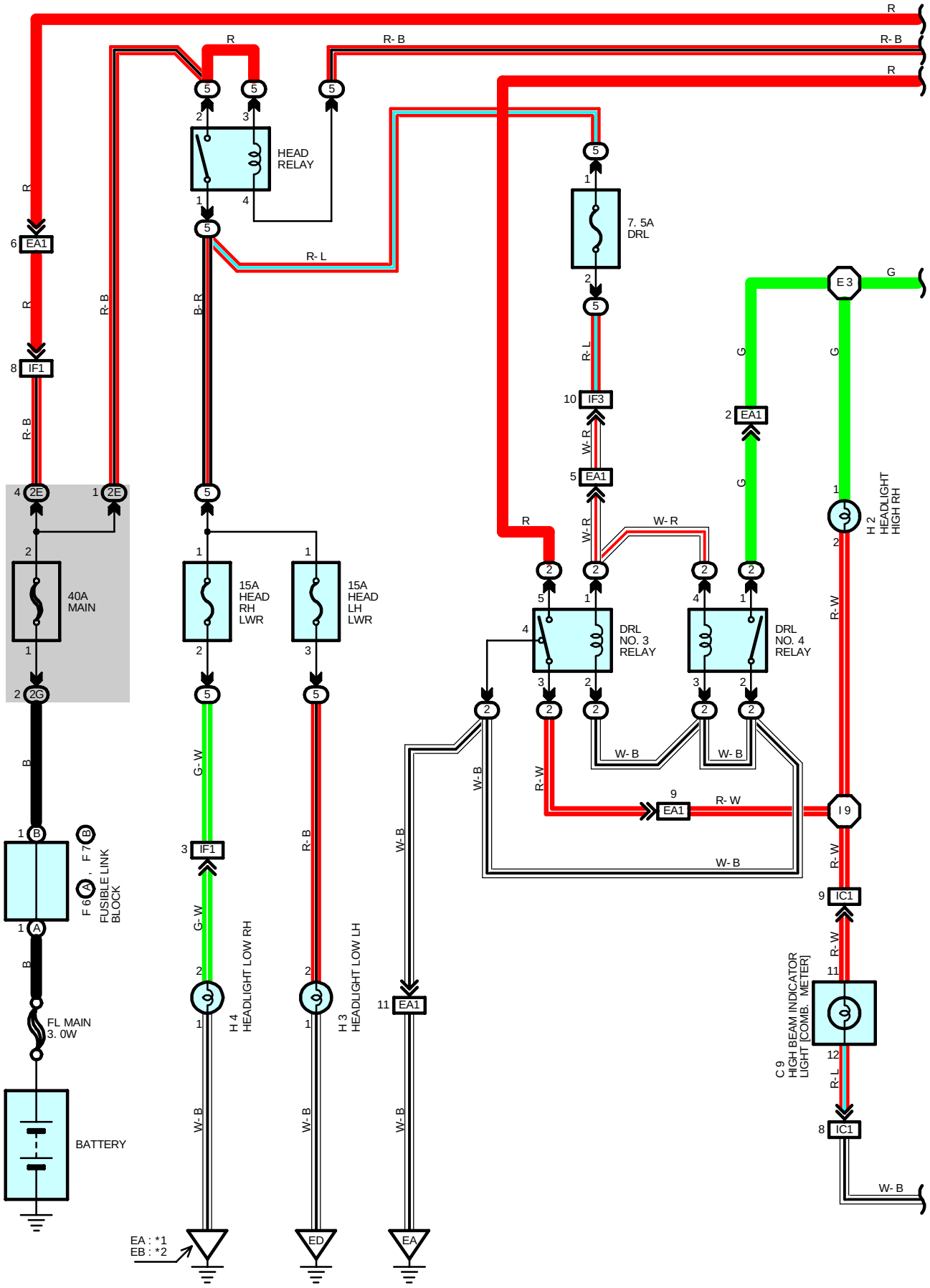

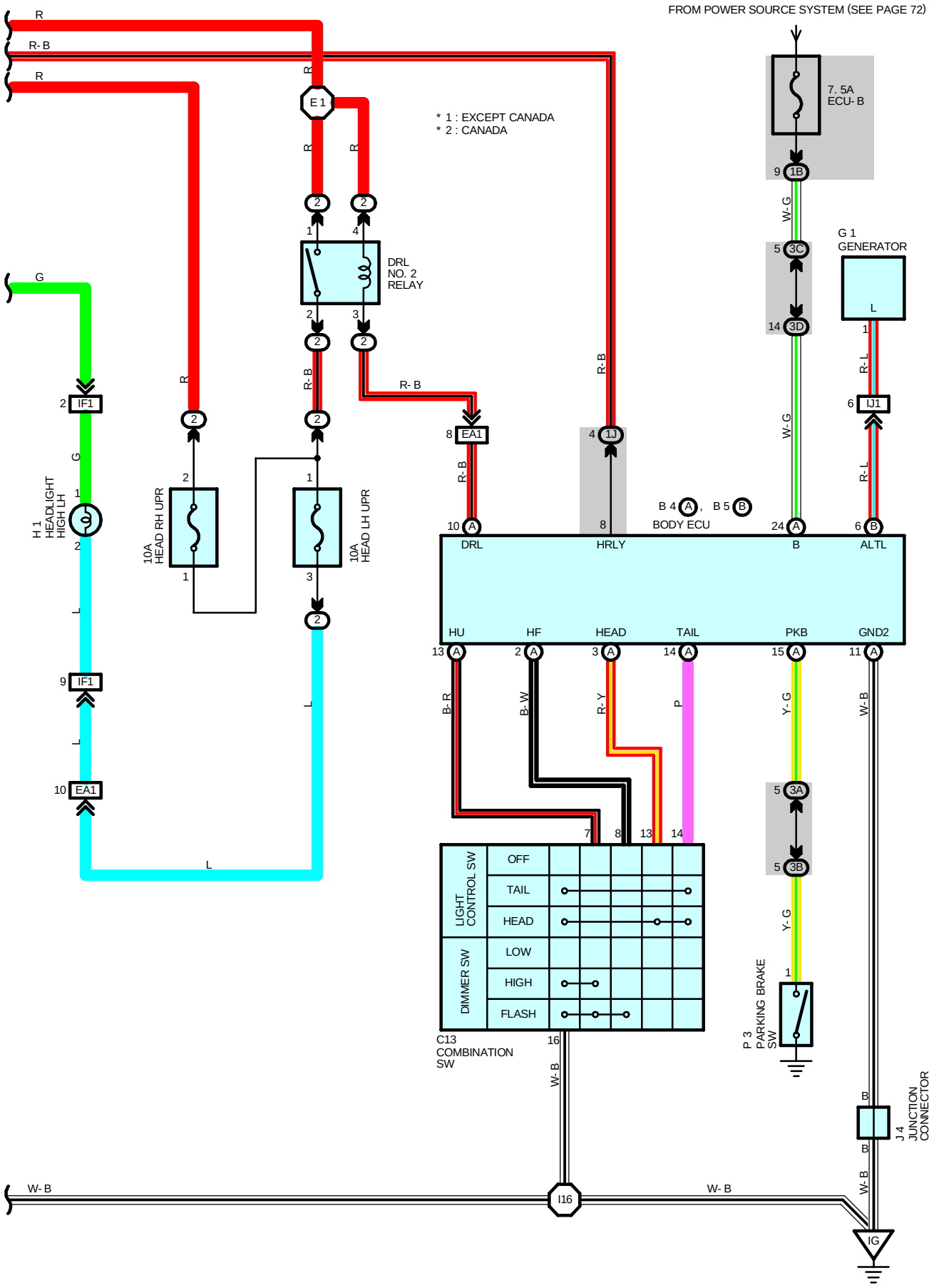
FROM POWER SOURCE SYSTEM (SEE PAGE 72)
* 1 : EXCEPT CANADA
* 2 : CANADA
7. 5A
ECU- B
DRL
NO. 2
RELAY
G 1
GENERATOR
H 1
HEADLIGHT
HIGH LH
10A
HEAD RH UPR
10A
HEAD LH UPR
B 4 A , B 5 B
BODY ECU
DRL
HRLY
B
ALTL
HU
HF
HEAD
TAIL
PKB
GND2
LIGHT
CONTROL SW
OFF
TAIL
HEAD
DIMMER SW
LOW
HIGH
FLASH
C13
COMBINATION
SW
P 3
PARKING BRAKE
SW
J 4
JUNCTION
CONNECTOR
I16
IG

HEADLIGHT (w/ DAYTIME RUNNING LIGHT)

SYSTEM OUTLINE

DAYTIME RUNNING LIGHT OPERATION

When the engine is started, a signal from the generator is input into TERMINAL (B)6 of the body ECU. At this time, if the parking brake pedal is depressed (Parking brake SW ON), the body ECU is not activated, and the daytime running light system does not operate.

When the parking brake pedal is released (Parking brake SW OFF), a signal is input into TERMINAL (A)15 of the body ECU. This activates the body ECU and the headlight turns on.

SERVICE HINTS

HEAD RELAY

1-2 : Closed with the light control SW at **HEAD** position or dimmer SW at **FLASH** position
Closed with the engine running and the parking brake pedal depressed (Parking brake SW off)

B4 (A), B5 (B) BODY ECU

(A)24-GROUND : Always approx. **12** volts
(B) 6-GROUND : Approx. **12** volts with engine running
(A)15-GROUND : Continuity with parking brake pedal depressed
(A)13-GROUND : Continuity with the dimmer SW at **HIGH** or **FLASH** position
(A)14-GROUND : Continuity with the light control SW at **TAIL** or **HEAD** position
(A)11-GROUND : Always continuity

: PARTS LOCATION

Code		See Page	Code		See Page	Code	See Page
B4	A	46 (Column Shift)	C13		48 (Floor Shift)	H4	44
		48 (Floor Shift)	F6	A	44	J4	47 (Column Shift)
B5	B	46 (Column Shift)	F7	B	44		49 (Floor Shift)
		48 (Floor Shift)	G1		44	P3	47 (Column Shift)
C9		46 (Column Shift)	H1		44		49 (Floor Shift)
		48 (Floor Shift)	H2		44		
C13		46 (Column Shift)	H3		44		

: RELAY BLOCKS

Code	See Page	Relay Blocks (Relay Block Location)
2	24	Engine Room R/B No.2 (Engine Compartment Right)
5	25	Engine Room R/B No.5 (Engine Compartment Left)

: JUNCTION BLOCK AND WIRE HARNESS CONNECTOR

Code	See Page	Junction Block and Wire Harness (Connector Location)
1B	27	Cowl Wire and Driver Side J/B (Lower Finish Panel)
1J	27	Engine Room Main Wire and Driver Side J/B (Lower Finish Panel)
2E	30	Engine Room Main Wire and Engine Room J/B (Engine Compartment Left)
2G	30	Engine Wire and Engine Room J/B (Engine Compartment Left)
3A	34	Cowl Wire and J/B No.3 (Left Kick Panel)
3B		
3C		
3D		

: CONNECTOR JOINING WIRE HARNESS AND WIRE HARNESS

Code	See Page	Joining Wire Harness and Wire Harness (Connector Location)
EA1	54	Cowl Wire and Engine Room No.2 Wire (Near the Engine Room R/B No.2)
IC1	56 (Column Shift)	Cowl Wire and Instrument Panel Wire (Left Kick Panel)
	60 (Floor Shift)	
IF1	56 (Column Shift)	Engine Room Main Wire and Cowl Wire (Left Side of Instrument Panel)
	60 (Floor Shift)	
IF3	56 (Column Shift)	
	60 (Floor Shift)	
IJ1	58 (Column Shift)	Engine Wire and Instrument Panel Wire (Right Kick Panel)
	62 (Floor Shift)	

: GROUND POINTS

Code	See Page	Ground Points Location
EA	54	Front Side of Right Fender
EB	54	Surge Tank RH
ED	54	Front Side of Left Fender
IG	56 (Column Shift)	Cowl Side Panel LH
	60 (Floor Shift)	

: SPLICE POINTS

Code	See Page	Wire Harness with Splice Points	Code	See Page	Wire Harness with Splice Points
E1	54	Engine Room No.2 Wire	I9	62 (Floor Shift)	Cowl Wire
E3	54	Cowl Wire	I16	58 (Column Shift)	
I9	58 (Column Shift)			62 (Floor Shift)	

HEADLIGHT (w/o DAYTIME RUNNING LIGHT)

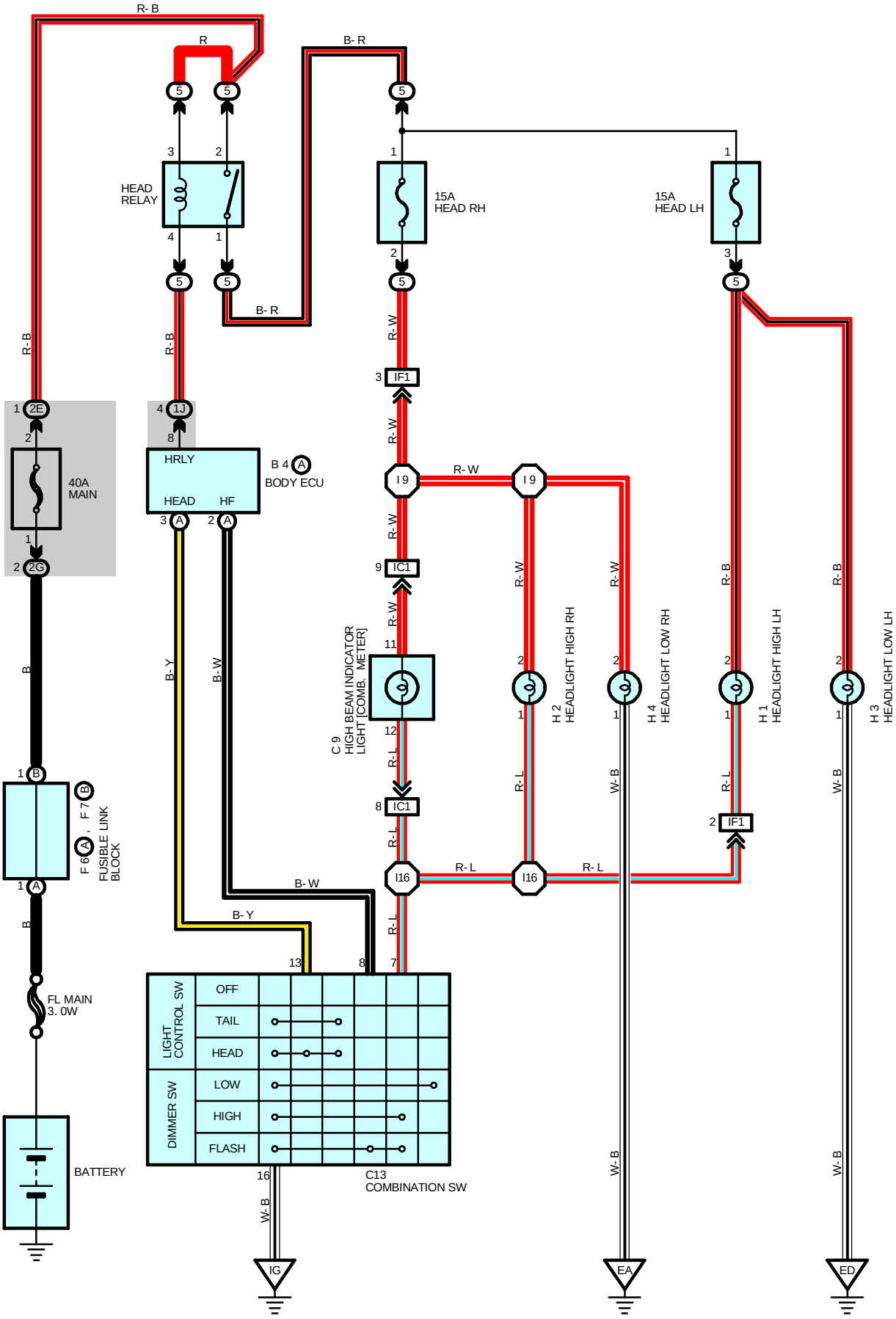

SERVICE HINTS

HEAD RELAY

2-1 : Closed with the light control SW at **HEAD** position or the dimmer SW at **FLASH** position

C13 LIGHT CONTROL SW [COMB. SW]

13-16 : Closed with the light control SW at **HEAD** position

C13 DIMMER SW [COMB. SW]

8-16 : Closed with the dimmer SW at **FLASH** position

7-16 : Closed with the dimmer SW at **HIGH** or **FLASH** position

: PARTS LOCATION

Code		See Page	Code		See Page	Code	See Page
B4	A	46 (Column Shift) 48 (Floor Shift)	C13		46 (Column Shift) 48 (Floor Shift)	H1 H2	44 44
C9		46 (Column Shift) 48 (Floor Shift)	F6 F7	A B	44 44	H3 H4	44 44

: RELAY BLOCKS

Code	See Page	Relay Blocks (Relay Block Location)
5	25	Engine Room R/B No.5 (Engine Compartment Left)

: JUNCTION BLOCK AND WIRE HARNESS CONNECTOR

Code	See Page	Junction Block and Wire Harness (Connector Location)
1J	27	Engine Room Main Wire and Driver Side J/B (Lower Finish Panel)
2E	30	Engine Room Main Wire and Engine Room J/B (Engine Compartment Left)
2G	30	Engine Wire and Engine Room J/B (Engine Compartment Left)

: CONNECTOR JOINING WIRE HARNESS AND WIRE HARNESS

Code	See Page	Joining Wire Harness and Wire Harness (Connector Location)
IC1	56 (Column Shift) 60 (Floor Shift)	Cowl Wire and Instrument Panel Wire (Left Kick Panel)
IF1	56 (Column Shift) 60 (Floor Shift)	Engine Room Main Wire and Cowl Wire (Left Side of Instrument Panel)

: GROUND POINTS

Code	See Page	Ground Points Location
EA	54	Front Side of Right Fender
ED	54	Front Side of Left Fender
IG	56 (Column Shift) 60 (Floor Shift)	Cowl Side Panel LH

: SPLICE POINTS

Code	See Page	Wire Harness with Splice Points	Code	See Page	Wire Harness with Splice Points
I9	58 (Column Shift) 62 (Floor Shift)	Cowl Wire	I16	58 (Column Shift) 62 (Floor Shift)	Cowl Wire

FOG LIGHT

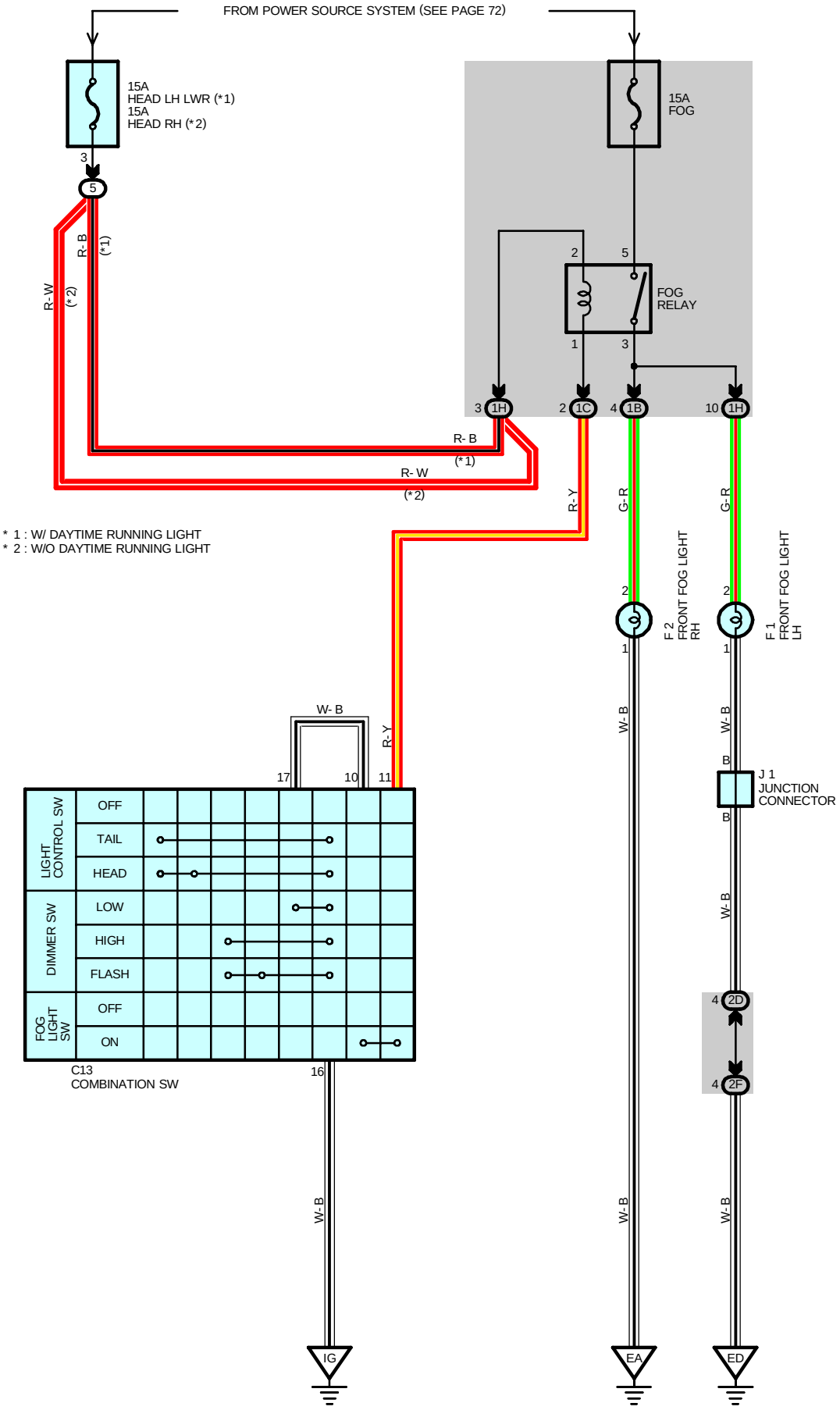
FROM POWER SOURCE SYSTEM (SEE PAGE 72)
15A
HEAD LH LWR (*1)
15A
HEAD RH (*2)
15A
FOG
FOG
RELAY
R- B
(*1)
R- W
(*2)
* 1 : W/ DAYTIME RUNNING LIGHT
* 2 : W/O DAYTIME RUNNING LIGHT
R- Y
G- R
W- B
LIGHT CONTROL SW
DIMMER SW
FOG LIGHT SW
OFF
TAIL
HEAD
LOW
HIGH
FLASH
OFF
ON
C13
COMBINATION SW
F 2
FRONT FOG LIGHT
RH
F 1
FRONT FOG LIGHT
LH
J 1
JUNCTION
CONNECTOR
IG
EA
ED

SERVICE HINTS

FOG RELAY

5-3 : Closed with the light control SW at **HEAD** position, dimmer SW at **LOW** position and the fog light SW **ON** position

: PARTS LOCATION

Code	See Page	Code	See Page	Code	See Page
C13	46 (Column Shift)	F1	44	J1	47 (Column Shift)
	48 (Floor Shift)	F2	44		49 (Floor Shift)

: RELAY BLOCKS

Code	See Page	Relay Blocks (Relay Block Location)
5	25	Engine Room R/B No.5 (Engine Compartment Left)

: JUNCTION BLOCK AND WIRE HARNESS CONNECTOR

Code	See Page	Junction Block and Wire Harness (Connector Location)
1B	27	Cowl Wire and Driver Side J/B (Lower Finish Panel)
1C		
1H	27	Engine Room Main Wire and Driver Side J/B (Lower Finish Panel)
2D	30	Engine Room Main Wire and Engine Room J/B (Engine Compartment Left)
2F		

: GROUND POINTS

Code	See Page	Ground Points Location
EA	54	Front Side of Right Fender
ED	54	Front Side of Left Fender
IG	56 (Column Shift)	Cowl Side Panel LH
	60 (Floor Shift)	

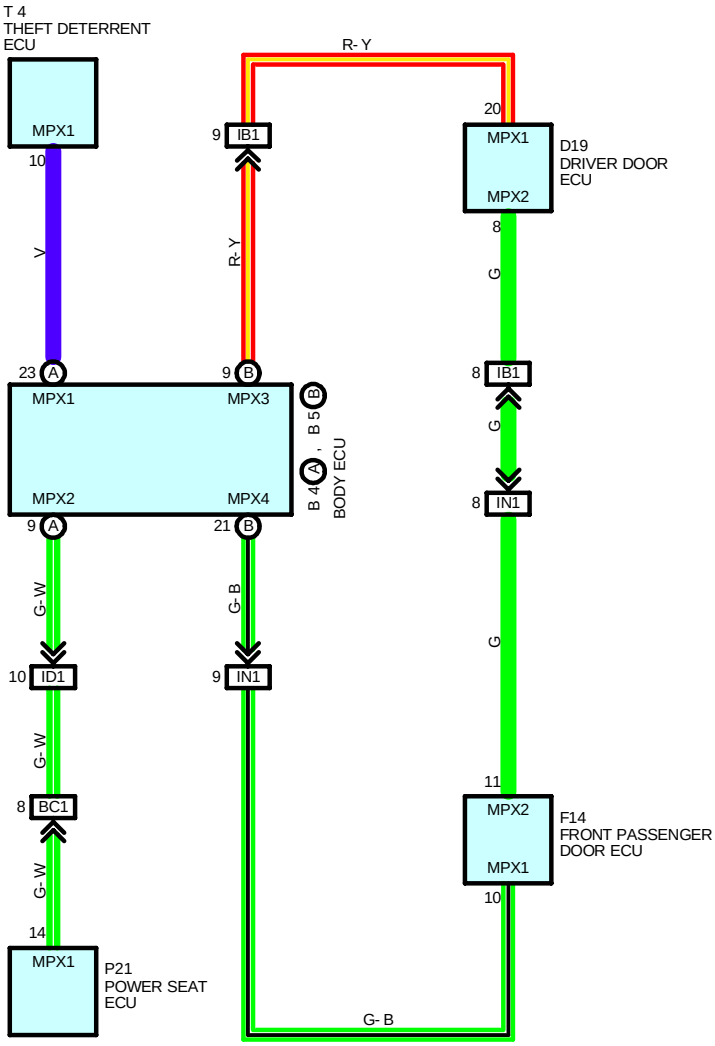
T 4
THEFT DETERRENT ECU
MPX1
10
V
23
A
MPX1
MPX2
9
A
G- W
10
ID1
G- W
8
BC1
G- W
14
MPX1
P21
POWER SEAT ECU
R- Y
9
IB1
R- Y
9
B
MPX3
MPX4
21
B
G- B
9
IN1
G- B
B 4 , B 5
A
B
BODY ECU
20
MPX1
MPX2
D19
DRIVER DOOR ECU
8
G
8
IB1
G
8
IN1
G
11
MPX2
MPX1
10
F14
FRONT PASSENGER DOOR ECU
G- B

SYSTEM OUTLINE

This is a multiplex system comprised of the body ECU, driver door ECU, front passenger door ECU, theft deterrent ECU and power seat ECU.

THE MULTIPLEX COMMUNICATION SYSTEM INCLUDES THE FOLLOWING SYSTEMS

- **AUTOMATIC LIGHT CONTROL**
- **DOOR LOCK CONTROL**
- **HEADLIGHT (w/ DAYTIME RUNNING LIGHT)**
- **INTERIOR LIGHT**
- **KEY REMINDER AND SEAT BELT WARNING**
- **LIGHT AUTO TURN OFF**
- **POWER SEAT (w/ DRIVING POSITION MEMORY)**
- **POWER WINDOW**
- **REMOTE CONTROL MIRROR (w/ DRIVING POSITION MEMORY)**
- **THEFT DETERRENT**
- **WIRELESS DOOR LOCK CONTROL**

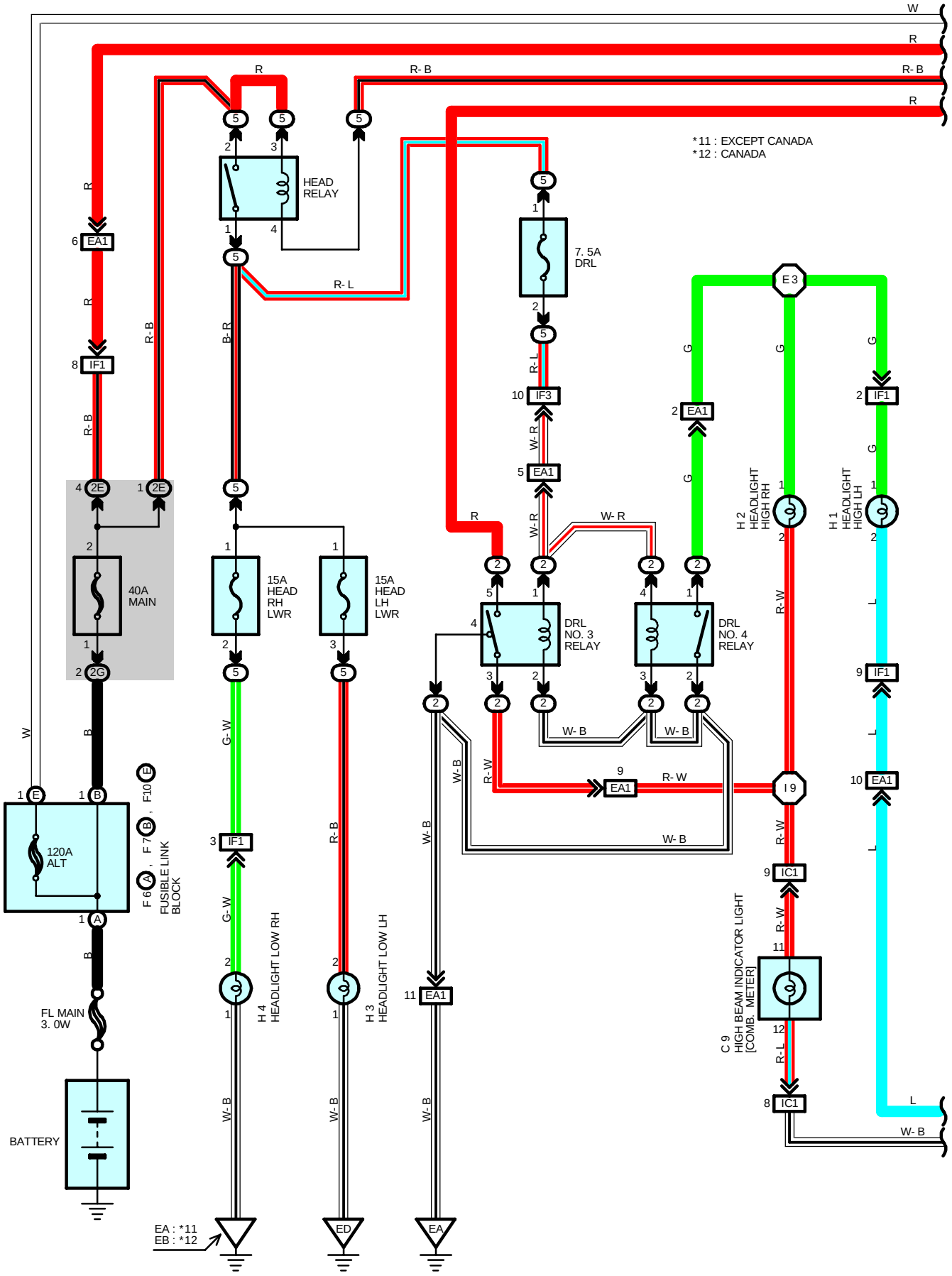
*11 : EXCEPT CANADA
*12 : CANADA
HEAD RELAY
7. 5A DRL
40A MAIN
15A HEAD RH LWR
15A HEAD LH LWR
DRL NO. 3 RELAY
DRL NO. 4 RELAY
120A ALT
FUSIBLE LINK BLOCK
FL MAIN 3. 0W
BATTERY
H 4 HEADLIGHT LOW RH
H 3 HEADLIGHT LOW LH
H 2 HEADLIGHT HIGH RH
H 1 HEADLIGHT HIGH LH
C 9 HIGH BEAM INDICATOR LIGHT [COMB. METER]
EA : *11
EB : *12
ED
EA

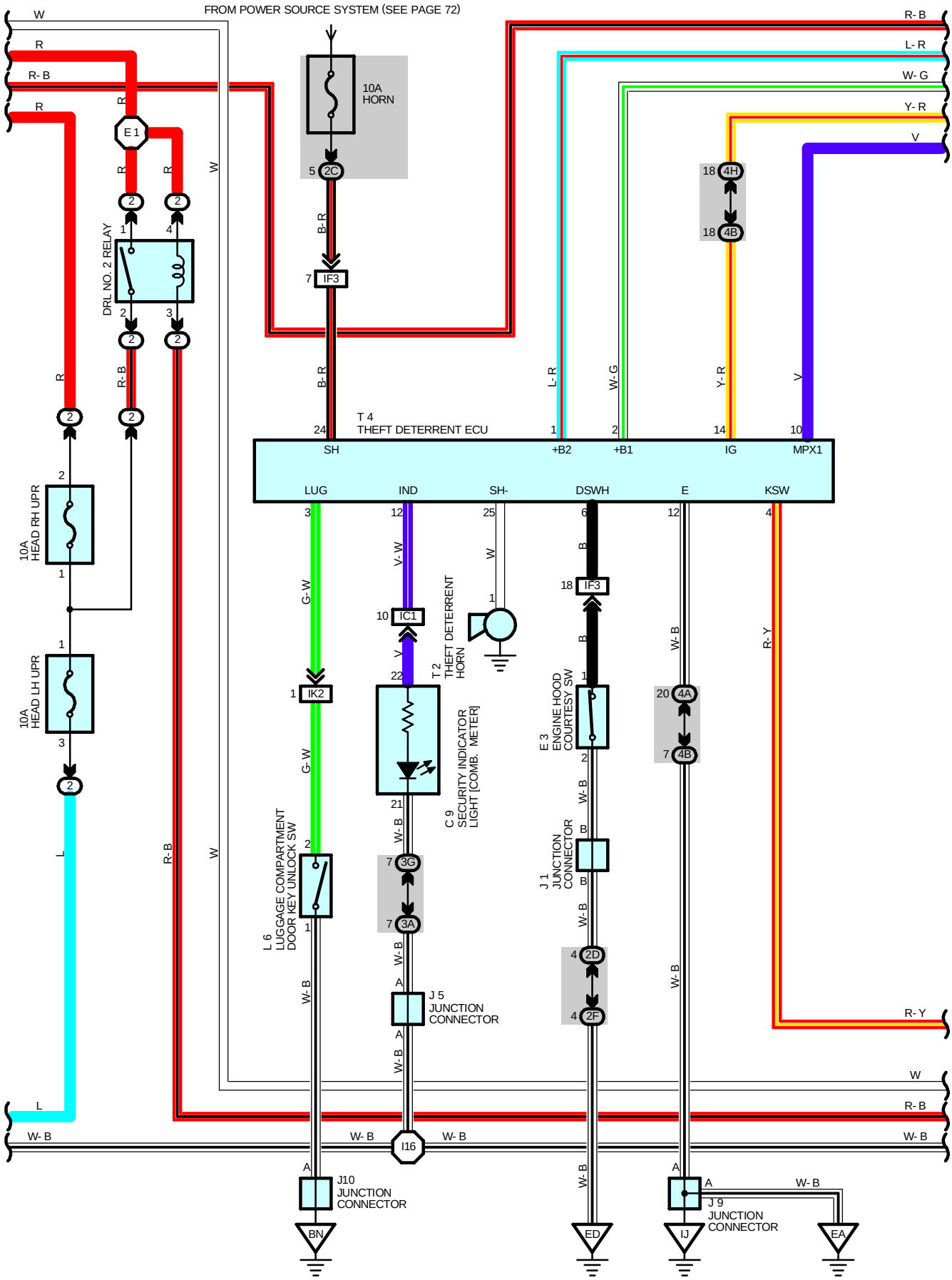
FROM POWER SOURCE SYSTEM (SEE PAGE 72)
10A HORN
DRL NO. 2 RELAY
E 1
10A HEAD RH UPR
10A HEAD LH UPR
T 4 THEFT DETERRENT ECU
SH
+B2
+B1
IG
MPX1
LUG
IND
SH-
DSWH
E
KSW
IC1
IK2
T 2 THEFT DETERRENT HORN
C 9 SECURITY INDICATOR LIGHT [COMB. METER]
E 3 ENGINE HOOD COURTESY SW
J 1 JUNCTION CONNECTOR
L 6 LUGGAGE COMPARTMENT DOOR KEY UNLOCK SW
J 5 JUNCTION CONNECTOR
J10 JUNCTION CONNECTOR
J 9 JUNCTION CONNECTOR
I16
BN
ED
IJ
EA

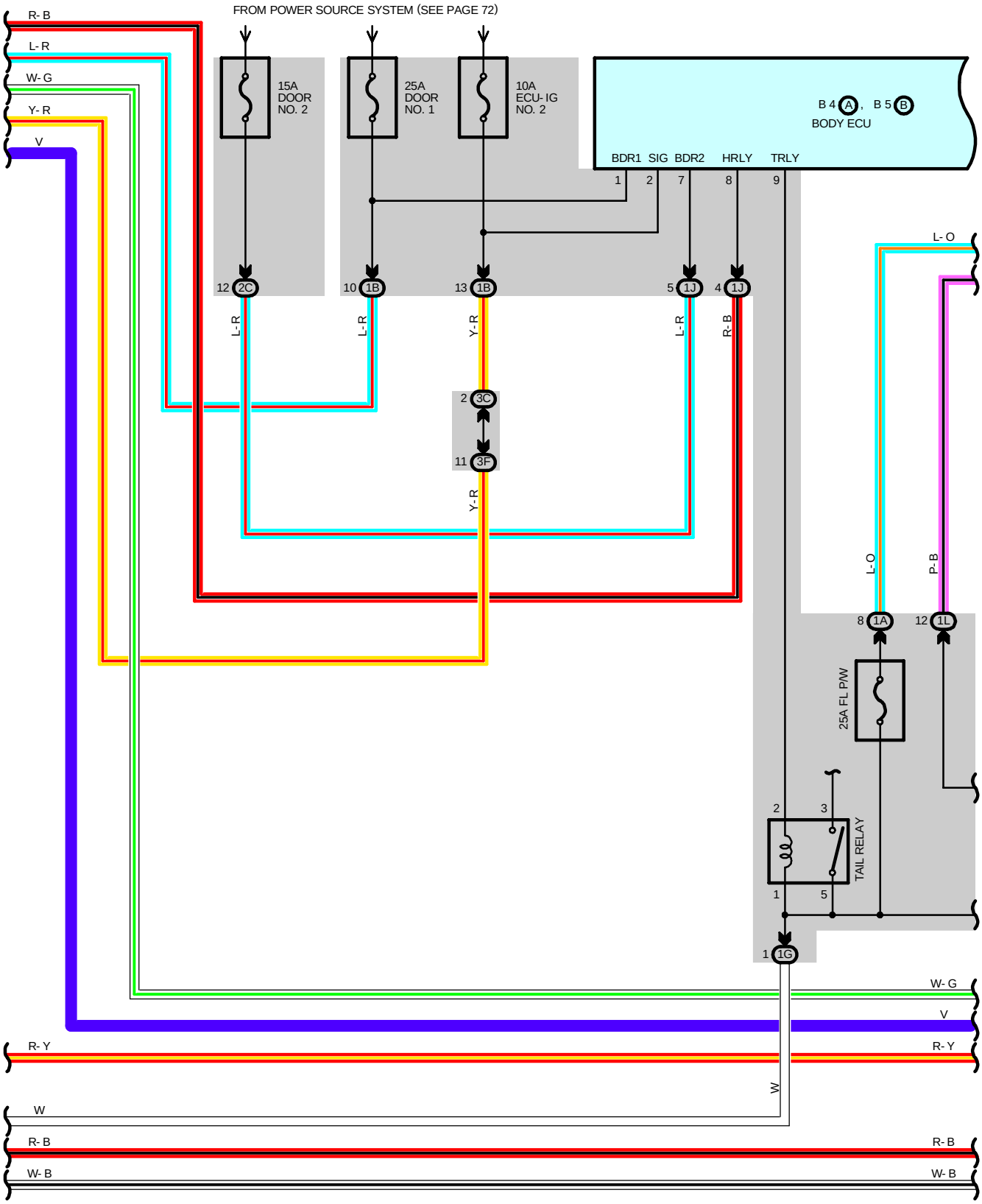
FROM POWER SOURCE SYSTEM (SEE PAGE 72)
R- B
L- R
W- G
Y- R
V
15A DOOR NO. 2
25A DOOR NO. 1
10A ECU- IG NO. 2
B 4 A , B 5 B
BODY ECU
BDR1 SIG BDR2 HRLY TRLY
1 2 7 8 9
12 2C
10 1B
13 1B
5 1J
4 1J
L- R
L- R
Y- R
L- R
R- B
2 3C
11 3F
Y- R
L- O
P- B
8 1A
12 1L
25A FL P/W
2 3
1 5
TAIL RELAY
1 1G
W- G
V
R- Y
R- Y
W
W
R- B
R- B
W- B
W- B

* 1 : AUTOMATIC A/C
* 2 : MANUAL A/C

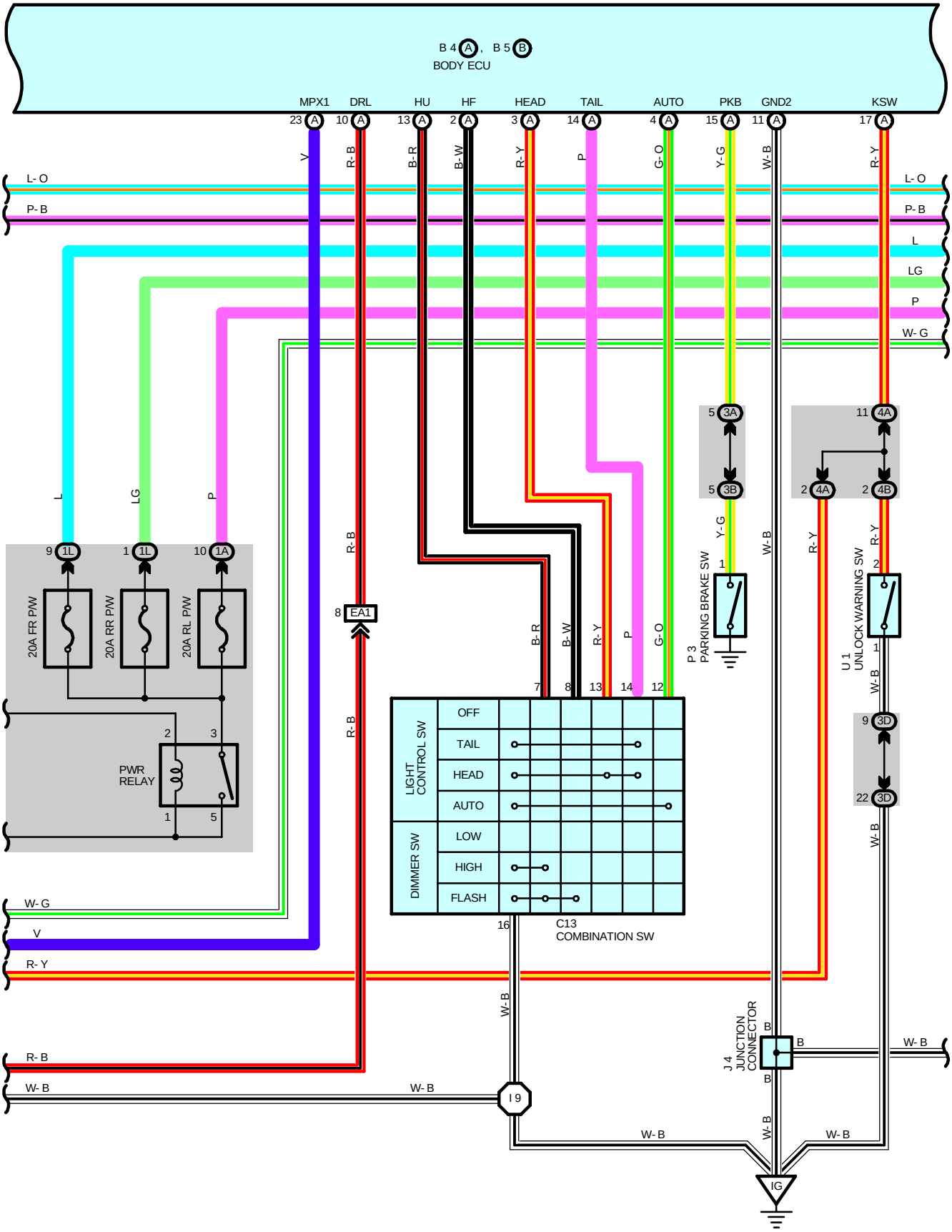

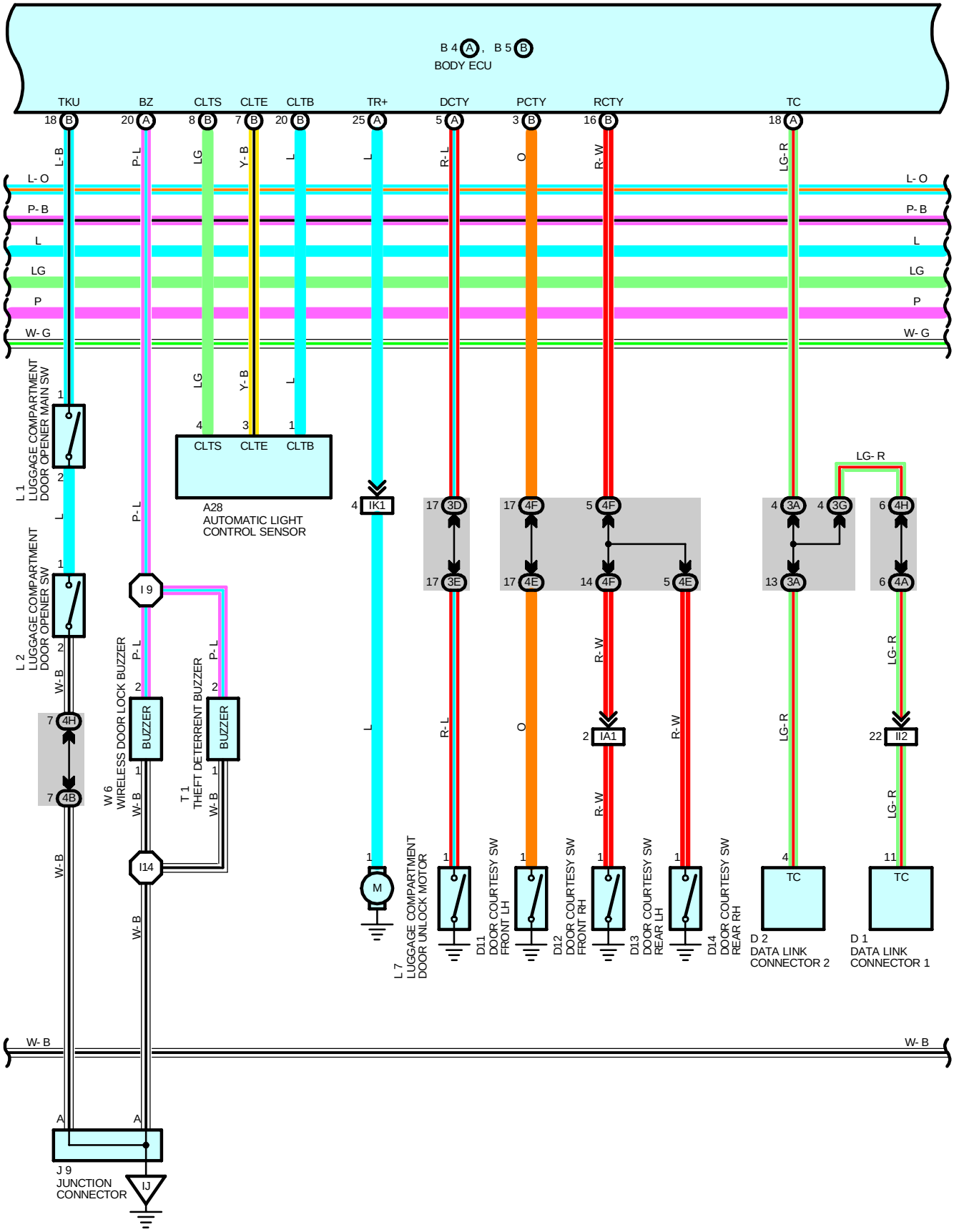
B 4 A , B 5 B
BODY ECU
TKU
BZ
CLTS
CLTE
CLTB
TR+
DCTY
PCTY
RCTY
TC
L- O
P- B
L
LG
P
W- G
L 1 LUGGAGE COMPARTMENT DOOR OPENER MAIN SW
L 2 LUGGAGE COMPARTMENT DOOR OPENER SW
A28 AUTOMATIC LIGHT CONTROL SENSOR
W 6 WIRELESS DOOR LOCK BUZZER
T 1 THEFT DETERRENT BUZZER
BUZZER
L 7 LUGGAGE COMPARTMENT DOOR UNLOCK MOTOR
D11 DOOR COURTESY SW FRONT LH
D12 DOOR COURTESY SW FRONT RH
D13 DOOR COURTESY SW REAR LH
D14 DOOR COURTESY SW REAR RH
D 2 DATA LINK CONNECTOR 2
D 1 DATA LINK CONNECTOR 1
J 9 JUNCTION CONNECTOR
IJ
W- B
L- B
P- L
Y- B
R- L
O
R- W
LG- R

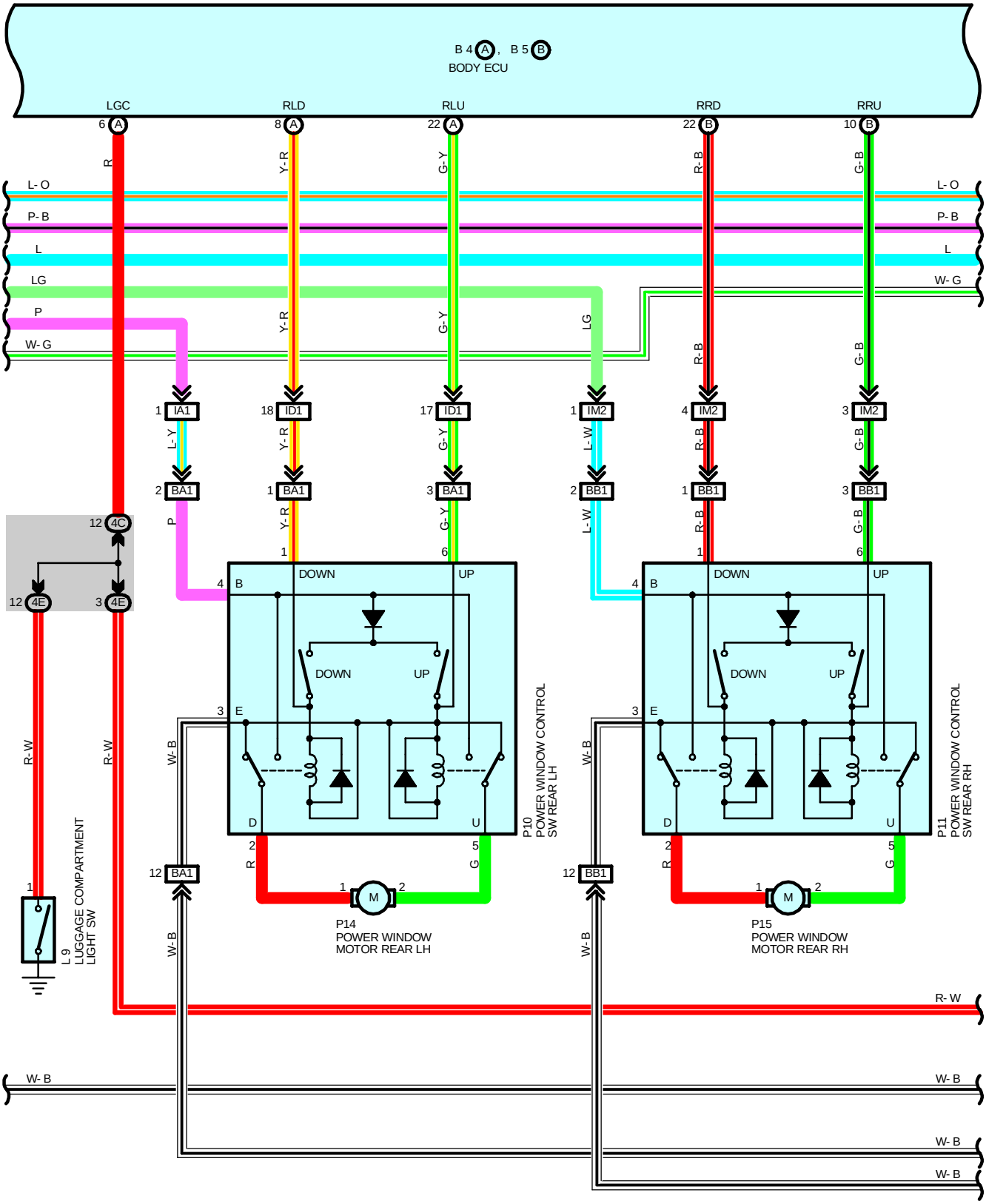
B 4 A , B 5 B
BODY ECU
LGC
RLD
RLU
RRD
RRU
6 A
8 A
22 A
22 B
10 B
R
Y-R
G-Y
R-B
G-B
L-O
P-B
L
LG
P
W-G
1 IA1
18 ID1
17 ID1
1 IM2
4 IM2
3 IM2
L-Y
Y-R
G-Y
L-W
R-B
G-B
2 BA1
1 BA1
3 BA1
2 BB1
1 BB1
3 BB1
P
Y-R
G-Y
L-W
R-B
G-B
12 4C
12 4E
3 4E
4
B
DOWN
UP
1
6
DOWN
UP
3
E
D
U
2
5
R
G
P10
POWER WINDOW CONTROL
SW REAR LH
P11
POWER WINDOW CONTROL
SW REAR RH
R-W
W-B
12 BA1
12 BB1
1
M
2
P14
POWER WINDOW
MOTOR REAR LH
P15
POWER WINDOW
MOTOR REAR RH
L 9
LUGGAGE COMPARTMENT
LIGHT SW
R-W
W-B
W-B
W-B
W-B
R-W

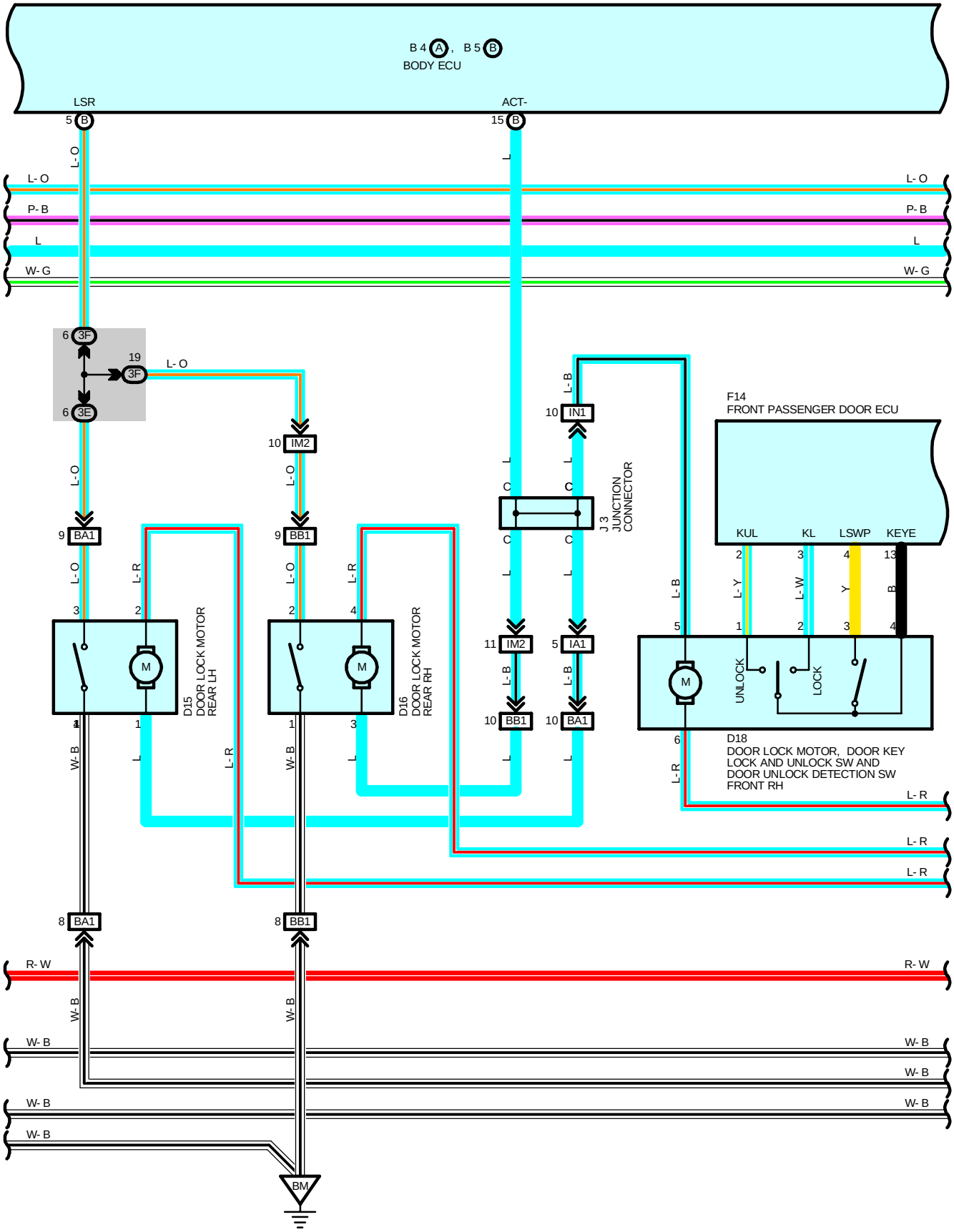
B 4 A , B 5 B
BODY ECU
LSR
ACT-
5 B
15 B
L- O
P- B
L
W- G
6 3F
19 3F
6 3E
10 IM2
9 BA1
9 BB1
3
2
4
1
M
D15
DOOR LOCK MOTOR
REAR LH
D16
DOOR LOCK MOTOR
REAR RH
L- R
W- B
8 BA1
8 BB1
10 IN1
C
J 3
JUNCTION
CONNECTOR
11 IM2
5 IA1
10 BB1
10 BA1
F14
FRONT PASSENGER DOOR ECU
KUL
KL
LSWP
KEYE
2
3
4
13
1
2
3
4
L- Y
L- W
Y
B
5
6
UNLOCK
LOCK
D18
DOOR LOCK MOTOR, DOOR KEY
LOCK AND UNLOCK SW AND
DOOR UNLOCK DETECTION SW
FRONT RH
R- W
BM

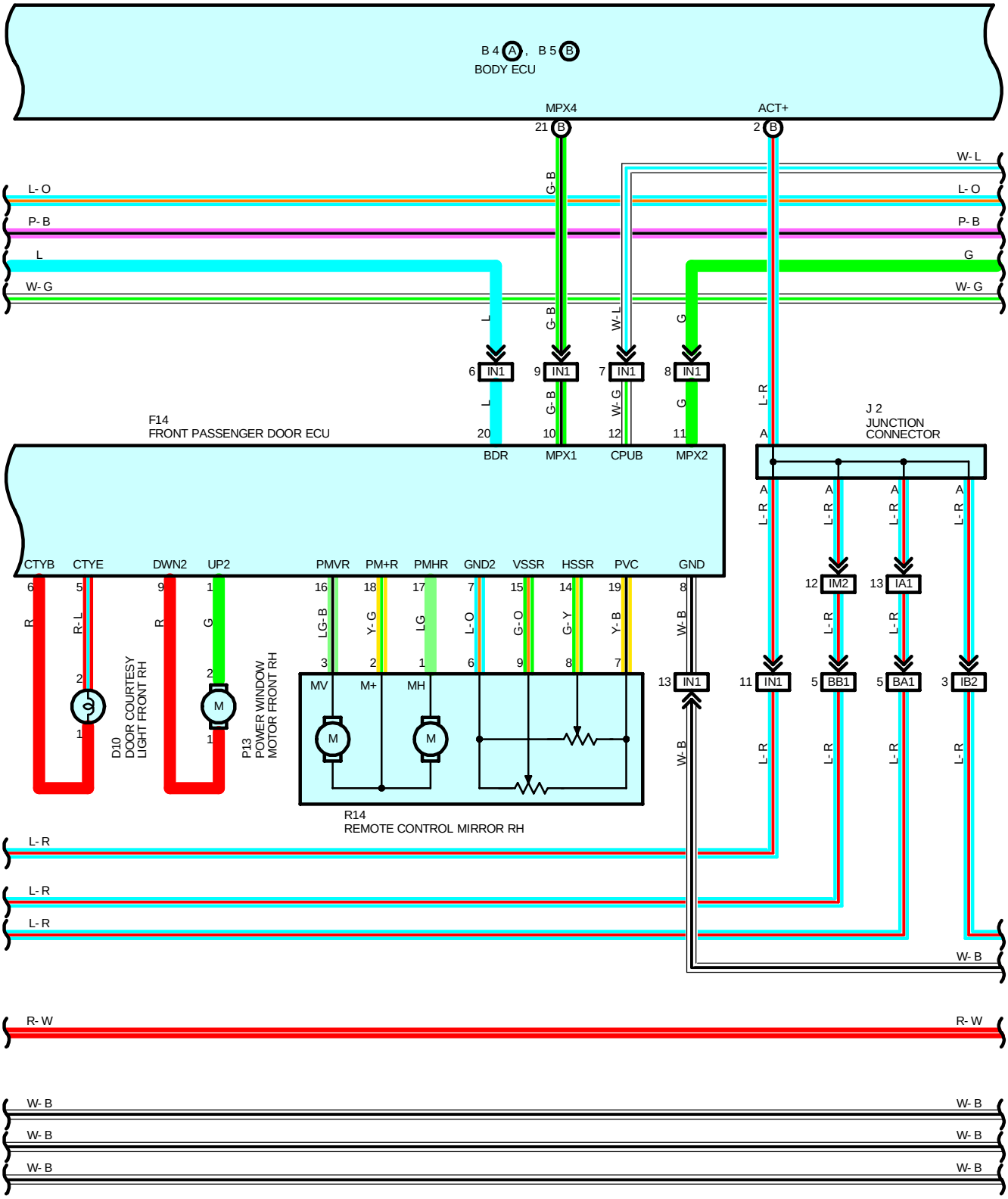
B 4 A , B 5 B
BODY ECU
MPX4
21 B
ACT+
2 B
W- L
L- O
P- B
L
W- G
G
G- B
W- L
G
L
G- B
W- G
G
L- R
6 IN1
9 IN1
7 IN1
8 IN1
F14
FRONT PASSENGER DOOR ECU
20
10
12
11
A
J 2
JUNCTION
CONNECTOR
BDR
MPX1
CPUB
MPX2
CTYB
CTYE
DWN2
UP2
PMVR
PM+R
PMHR
GND2
VSSR
HSSR
PVC
GND
6
5
9
1
16
18
17
7
15
14
19
8
R
R- L
R
G
LG- B
Y- G
LG
L- O
G- O
G- Y
Y- B
W- B
2
2
3
2
1
6
9
8
7
13 IN1
11 IN1
12 IM2
13 IA1
5 BB1
5 BA1
3 IB2
D10
DOOR COURTESY
LIGHT FRONT RH
P13
POWER WINDOW
MOTOR FRONT RH
MV
M+
MH
M
M
M
R14
REMOTE CONTROL MIRROR RH
L- R
L- R
L- R
W- B
R- W
R- W
W- B
W- B
W- B
W- B
W- B
W- B

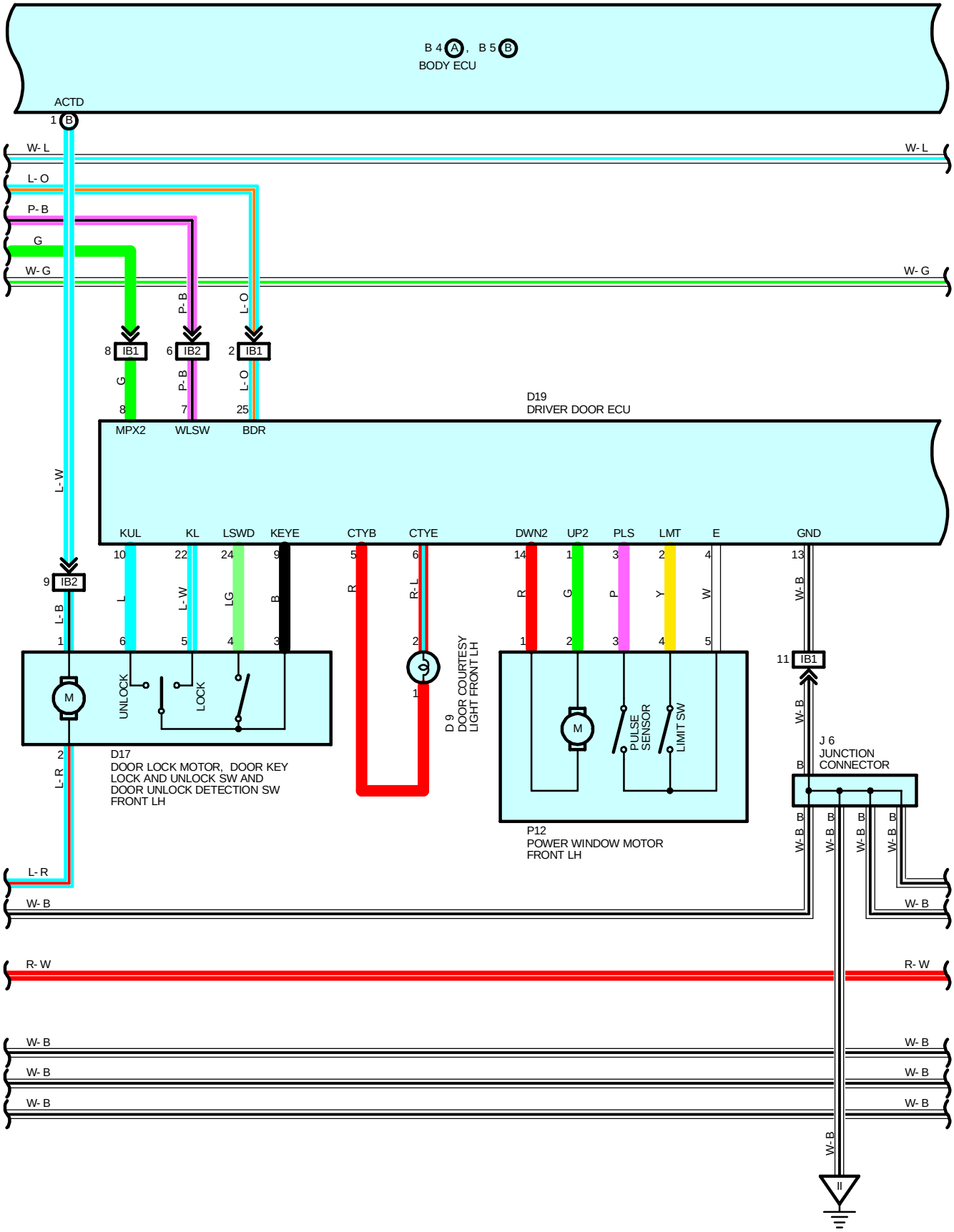
B 4 A , B 5 B
BODY ECU
ACTD
1 B
W- L
W- L
L- O
P- B
G
W- G
W- G
P- B
L- O
8 IB1
6 IB2
2 IB1
G
P- B
L- O
8
7
25
MPX2
WLSW
BDR
D19
DRIVER DOOR ECU
L- W
KUL
KL
LSWD
KEYE
CTYB
CTYE
DWN2
UP2
PLS
LMT
E
GND
10
22
24
9
5
6
14
1
3
2
4
13
9 IB2
L- B
1
L
L- W
LG
B
R
R- L
R
G
P
Y
W
W- B
6
5
4
3
2
1
2
1
3
4
5
11 IB1
M
UNLOCK
LOCK
D17
DOOR LOCK MOTOR, DOOR KEY
LOCK AND UNLOCK SW AND
DOOR UNLOCK DETECTION SW
FRONT LH
D 9
DOOR COURTESY
LIGHT FRONT LH
M
PULSE
SENSOR
LIMIT SW
P12
POWER WINDOW MOTOR
FRONT LH
W- B
J 6
JUNCTION
CONNECTOR
B
2
L- R
L- R
W- B
W- B
R- W
R- W
W- B
W- B
W- B
W- B
W- B
W- B
W- B
W- B
W- B
W- B
W- B
II

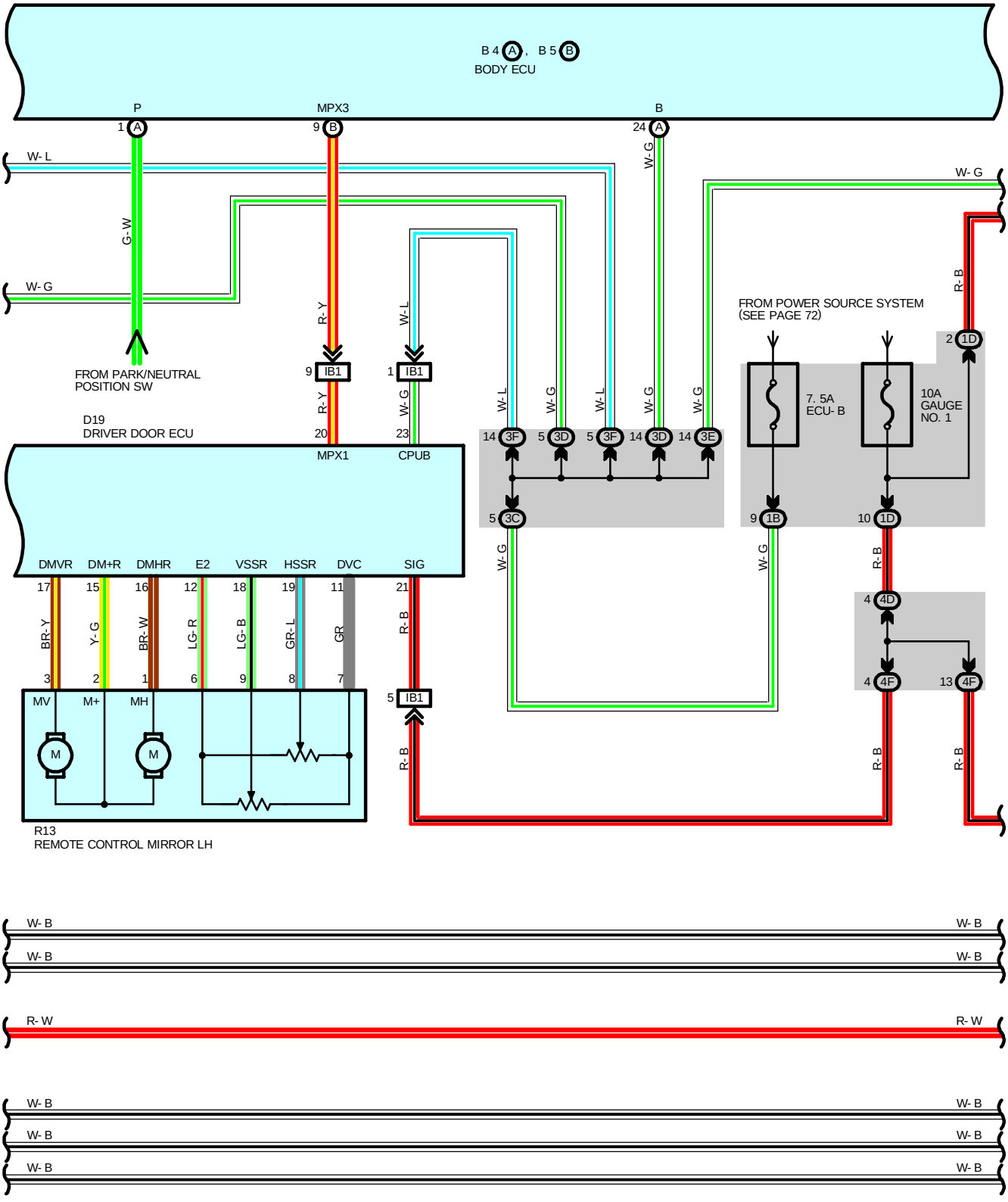
B 4 A , B 5 B
BODY ECU
P
MPX3
B
1 A
9 B
24 A
W- L
W- G
G- W
W- G
R- Y
W- L
W- G
FROM PARK/NEUTRAL POSITION SW
9 IB1
1 IB1
R- Y
W- G
D19
DRIVER DOOR ECU
20
23
MPX1
CPUB
W- L
W- G
W- L
W- G
W- G
14 3F
5 3D
5 3F
14 3D
14 3E
5 3C
W- G
FROM POWER SOURCE SYSTEM (SEE PAGE 72)
7. 5A ECU- B
10A GAUGE NO. 1
R- B
2 1D
9 1B
10 1D
W- G
R- B
4 4D
4 4F
13 4F
DMVR
DM+R
DMHR
E2
VSSR
HSSR
DVC
SIG
17
15
16
12
18
19
11
21
BR- Y
Y- G
BR- W
LG- R
LG- B
GR- L
GR
R- B
3
2
1
6
9
8
7
5 IB1
MV
M+
MH
M
M
R- B
R- B
R- B
R13
REMOTE CONTROL MIRROR LH
W- B
W- B
W- B
W- B
R- W
R- W
W- B
W- B
W- B
W- B
W- B
W- B

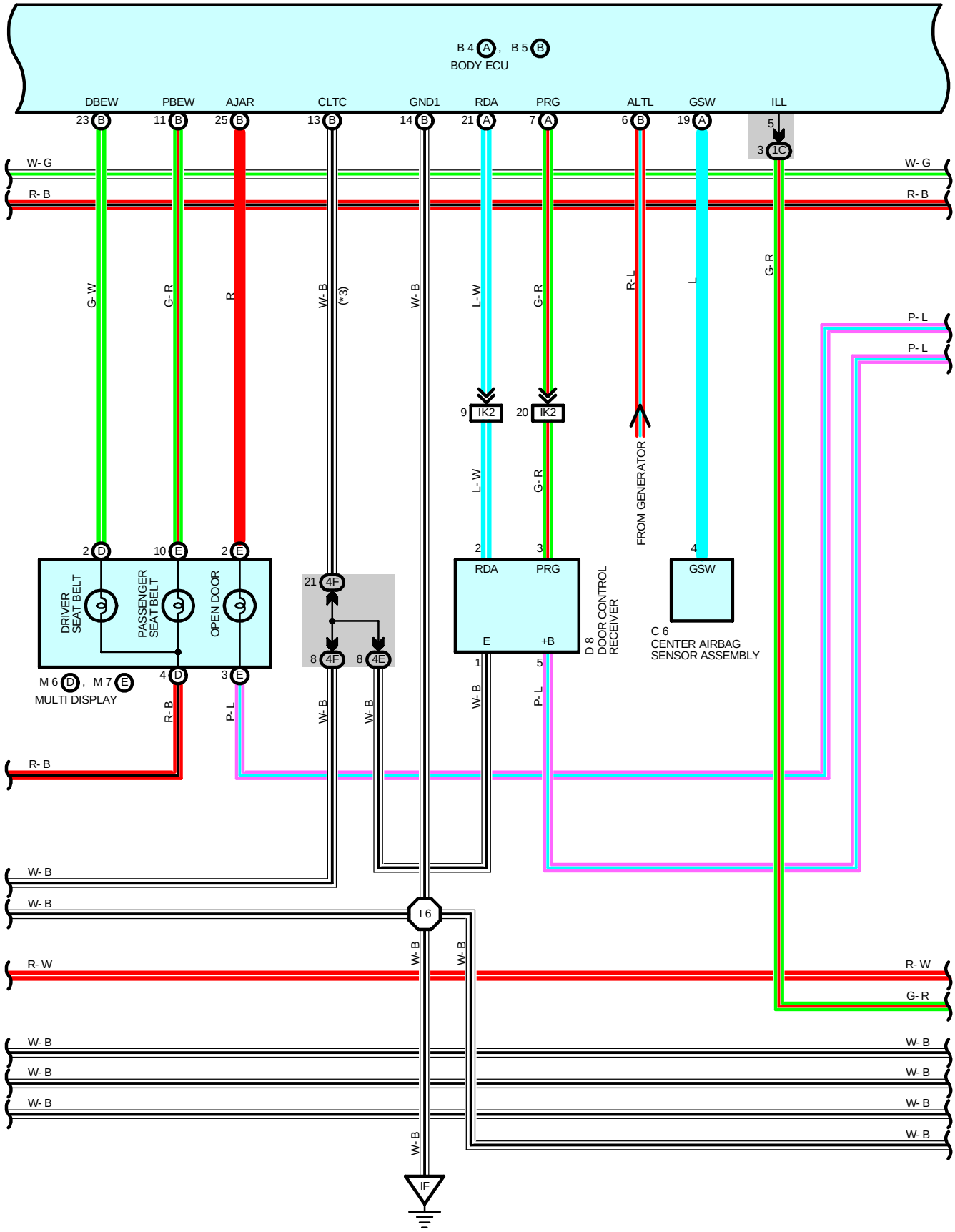
B 4 (A) , B 5 (B)
BODY ECU
DBEW
PBEW
AJAR
CLTC
GND1
RDA
PRG
ALTL
GSW
ILL
23 (B)
11 (B)
25 (B)
13 (B)
14 (B)
21 (A)
7 (A)
6 (B)
19 (A)
5
3 (1C)
W- G
R- B
G- W
G- R
R
W- B
(*3)
L- W
R- L
L
P- L
9 IK2
20 IK2
FROM GENERATOR
2 (D)
10 (E)
2 (E)
DRIVER SEAT BELT
PASSENGER SEAT BELT
OPEN DOOR
21 4F
8 4F
8 4E
2
3
4
RDA
PRG
GSW
E
+B
1
5
D 8
DOOR CONTROL RECEIVER
C 6
CENTER AIRBAG SENSOR ASSEMBLY
M 6 (D) , M 7 (E)
MULTI DISPLAY
4 (D)
3 (E)
I 6
IF
R- W
G- R

* 3 : TAIWAN

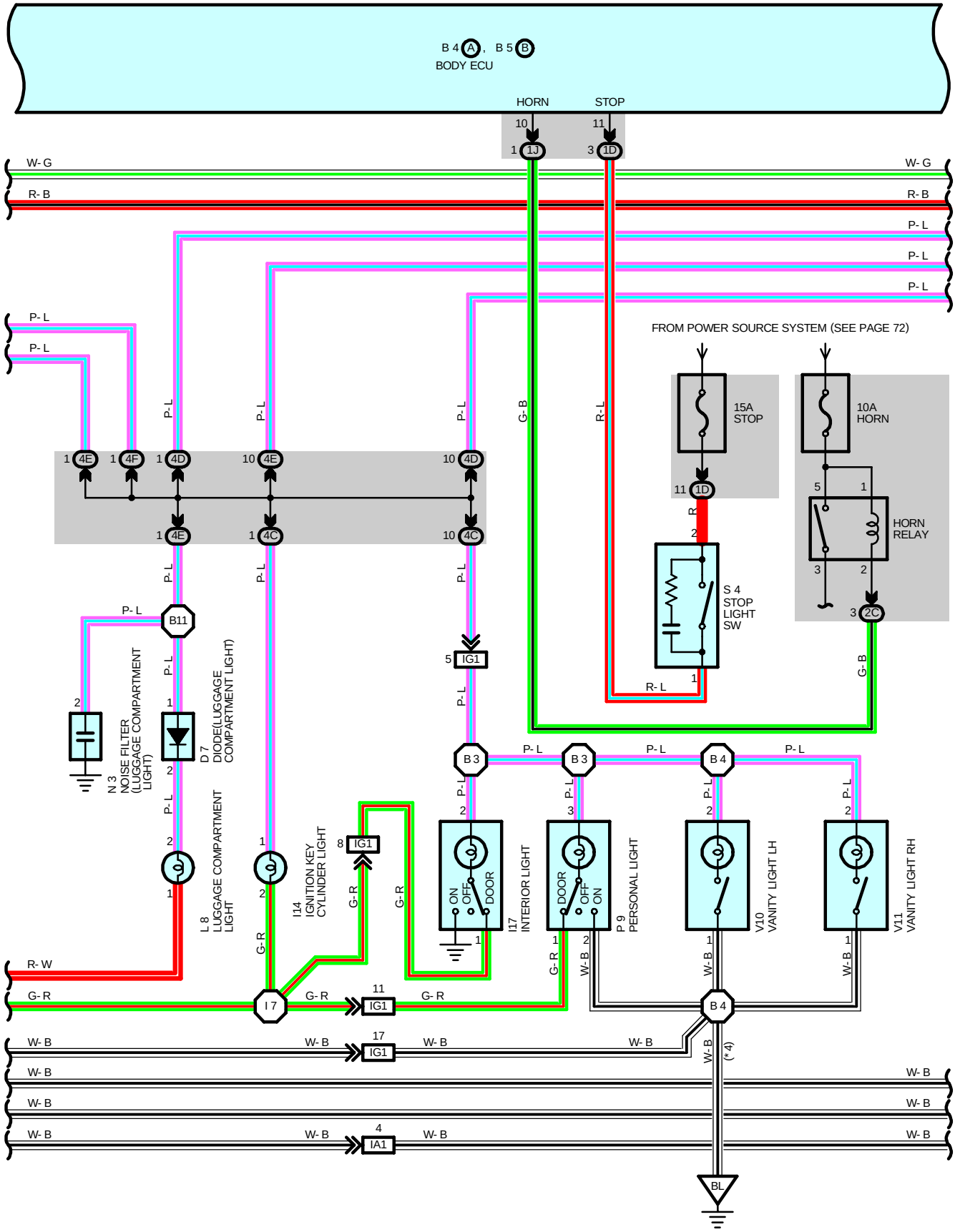
B 4 A , B 5 B
BODY ECU
HORN
STOP
FROM POWER SOURCE SYSTEM (SEE PAGE 72)
15A STOP
10A HORN
HORN RELAY
S 4 STOP LIGHT SW
N 3 NOISE FILTER (LUGGAGE COMPARTMENT LIGHT)
D 7 DIODE(LUGGAGE COMPARTMENT LIGHT)
L 8 LUGGAGE COMPARTMENT LIGHT
I14 IGNITION KEY CYLINDER LIGHT
I17 INTERIOR LIGHT
P 9 PERSONAL LIGHT
V10 VANITY LIGHT LH
V11 VANITY LIGHT RH
W- G
R- B
P- L
G- B
R- L
R- W
G- R
W- B
(*4)
BL

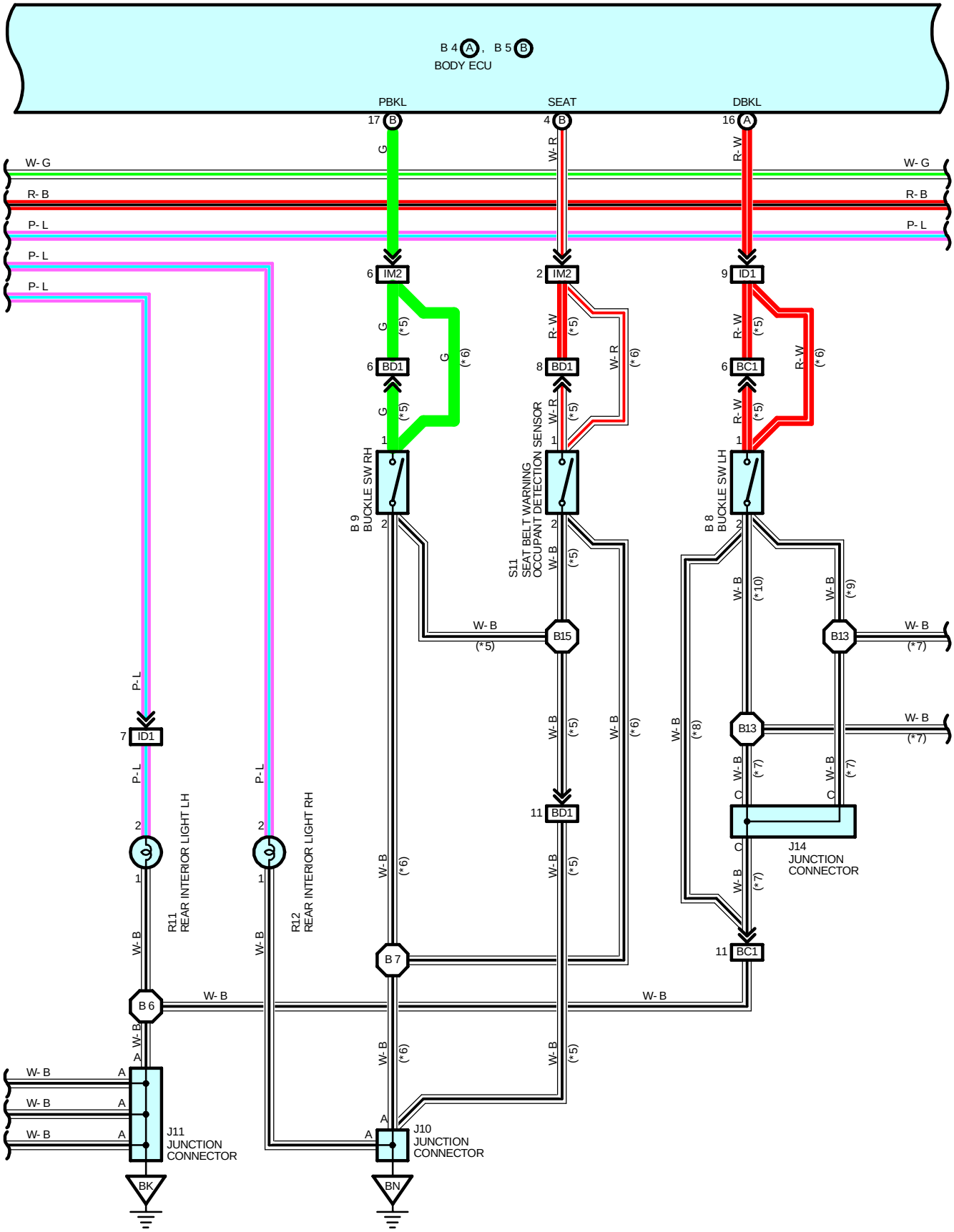
B 4 A , B 5 B
BODY ECU
PBKL
SEAT
DBKL
17 B
4 B
16 A
G
W-R
R-W
W- G
R- B
P- L
P- L
P- L
W- G
R- B
P- L
6 IM2
2 IM2
9 ID1
G
(*5)
6 BD1
G
(*6)
R-W
(*5)
8 BD1
W-R
(*6)
6 BC1
R-W
(*6)
G
(*5)
1
W-R
(*5)
1
R-W
(*5)
1
B 9
BUCKLE SW RH
2
S11
SEAT BELT WARNING
OCCUPANT DETECTION SENSOR
2
B 8
BUCKLE SW LH
2
W- B
(*5)
W- B
(*10)
W- B
(*9)
W- B
(*5)
B15
B13
W- B
(*7)
P- L
7 ID1
W- B
(*8)
B13
W- B
(*7)
P- L
W- B
(*7)
W- B
(*7)
2
C
C
J14
JUNCTION
CONNECTOR
R11
REAR INTERIOR LIGHT LH
P- L
2
R12
REAR INTERIOR LIGHT RH
11 BD1
W- B
(*5)
W- B
(*6)
1
1
W- B
(*6)
W- B
(*5)
W- B
(*7)
11 BC1
B 7
W- B
W- B
B 6
W- B
A
W- B
A
W- B
A
W- B
A
J11
JUNCTION
CONNECTOR
W- B
(*6)
W- B
(*5)
A
A
J10
JUNCTION
CONNECTOR
BK
BN

* 4 : W/ MOON ROOF
* 5 : W/ POWER SEAT
* 6 : W/O POWER SEAT
* 7 : W/ DRIVING POSITION MEMORY
* 8 : W/O DRIVING POSITION MEMORY
* 9 : FLOOR SHIFT W/ DRIVING POSITION MEMORY
*10 : COLUMN SHIFT W/ DRIVING POSITION MEMORY

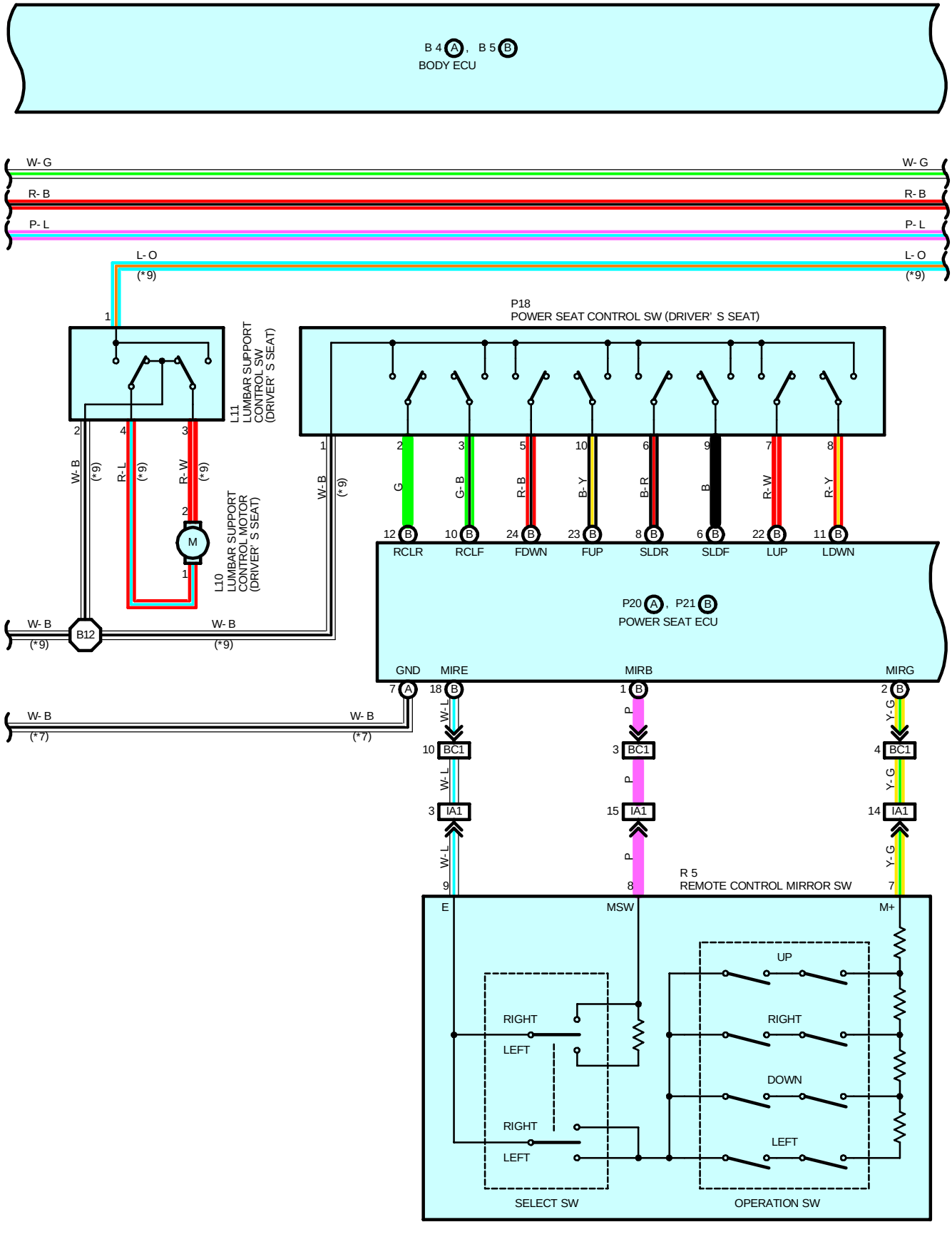

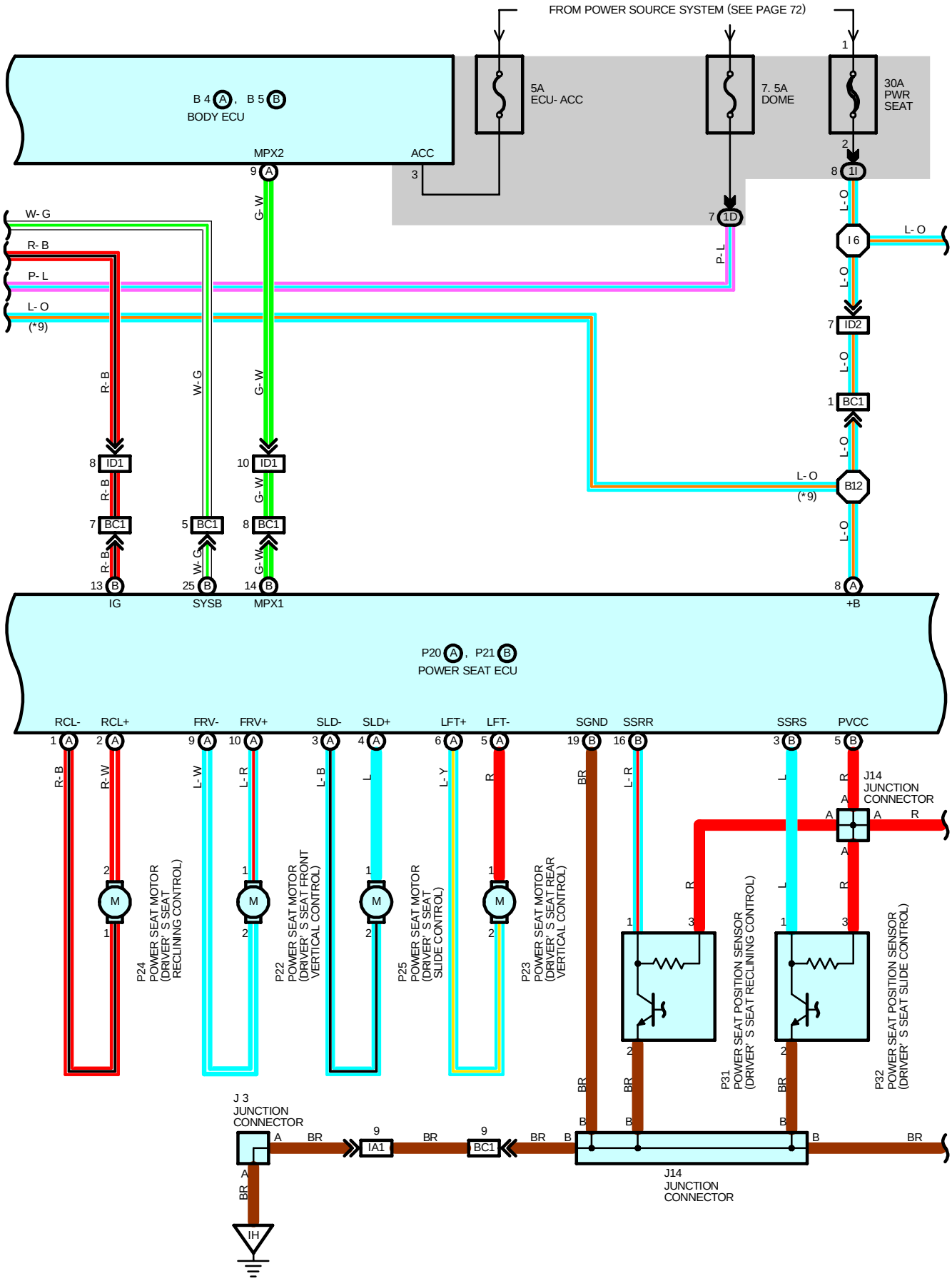
FROM POWER SOURCE SYSTEM (SEE PAGE 72)
B 4 A , B 5 B
BODY ECU
MPX2
ACC
5A
ECU- ACC
7. 5A
DOME
30A
PWR
SEAT
W- G
R- B
P- L
L- O
(*9)
G- W
W- G
R- B
ID1
BC1
ID2
I 6
B12
IG
SYSB
MPX1
+B
P20 A , P21 B
POWER SEAT ECU
RCL-
RCL+
FRV-
FRV+
SLD-
SLD+
LFT+
LFT-
SGND
SSRR
SSRS
PVCC
P24
POWER SEAT MOTOR
(DRIVER' S SEAT
RECLINING CONTROL)
P22
POWER SEAT MOTOR
(DRIVER' S SEAT FRONT
VERTICAL CONTROL)
P25
POWER SEAT MOTOR
(DRIVER' S SEAT
SLIDE CONTROL)
P23
POWER SEAT MOTOR
(DRIVER' S SEAT REAR
VERTICAL CONTROL)
P31
POWER SEAT POSITION SENSOR
(DRIVER' S SEAT RECLINING CONTROL)
P32
POWER SEAT POSITION SENSOR
(DRIVER' S SEAT SLIDE CONTROL)
J14
JUNCTION
CONNECTOR
J 3
JUNCTION
CONNECTOR
IA1
IH

* 7 : W/ DRIVING POSITION MEMORY
* 9 : FLOOR SHIFT W/ DRIVING POSITION MEMORY

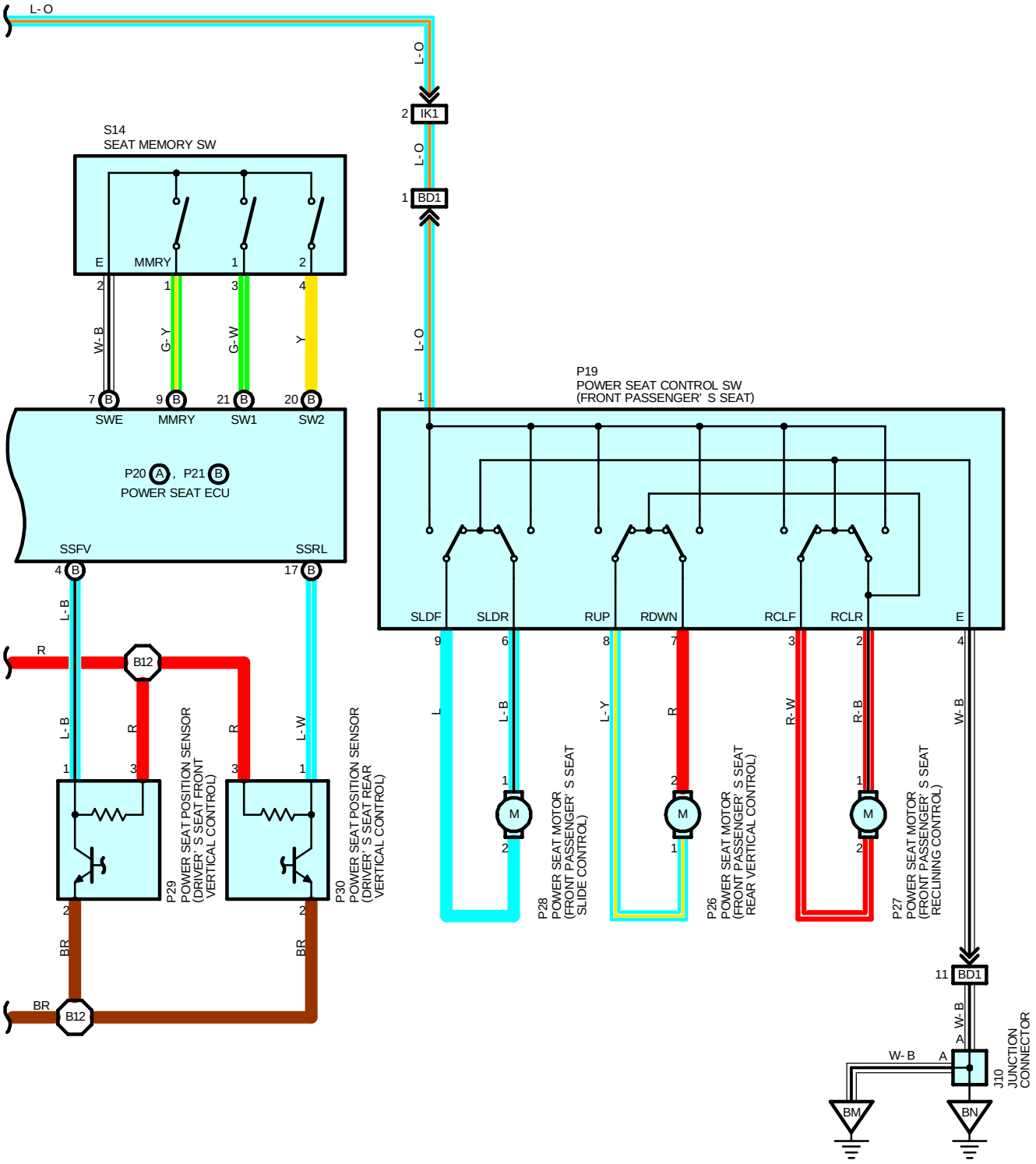

SERVICE HINTS

T4 THEFT DETERRENT ECU

1-GROUND : Always approx. **12** volts
2-GROUND : Always approx. **12** volts
14-GROUND : Approx. **12** volts with ignition SW at **ON** or **ST** position
24-GROUND : Always approx. **12** volts
12-GROUND : Always continuity

B4 (A), B5 (B) BODY ECU

1-GROUND : Always approx. **12** volts
2-GROUND : Approx. **12** volts with ignition SW at **ON** or **ST** position
3-GROUND : Approx. **12** volts with ignition SW at **ACC** or **ON** position
7-GROUND : Always approx. **12** volts
(A)24-GROUND : Always approx. **12** volts
(A)11-GROUND : Always continuity
(B)14-GROUND : Always continuity

D19 DRIVER DOOR ECU

13-GROUND : Always continuity
21-GROUND : Approx. **12** volts with ignition SW at **ON** or **ST** position
23-GROUND : Always approx. **12** volts
24-GROUND : Always approx. **12** volts

F14 FRONT PASSENGER DOOR ECU

8-GROUND : Always continuity
12-GROUND : Always approx. **12** volts

P20 (A), P21 (B) POWER SEAT ECU

(A) 7-GROUND : Always continuity
(A) 8-GROUND : Always approx. **12** volts
(B)13-GROUND : Approx. **12** volts with ignition SW at **ON** or **ST** position
(B)19-GROUND : Always continuity

: PARTS LOCATION

Code	See Page	Code	See Page	Code	See Page
A28	46 (Column Shift)	J1	49 (Floor Shift)	P21 B	52 (Column Shift)
	48 (Floor Shift)	J2	47 (Column Shift)		53 (Floor Shift)
B4 A	46 (Column Shift)		49 (Floor Shift)	P22	52 (Column Shift)
	48 (Floor Shift)	J3	47 (Column Shift)		53 (Floor Shift)
B5 B	46 (Column Shift)		49 (Floor Shift)	P23	52 (Column Shift)
	48 (Floor Shift)	J4	47 (Column Shift)		53 (Floor Shift)
B8	50 (w/o Power Seat)		49 (Floor Shift)	P24	52 (Column Shift)
	52 (Column Shift w/ Power Seat)	J5	47 (Column Shift)		53 (Floor Shift)
	53 (Floor Shift w/ Power Seat)		49 (Floor Shift)	P25	52 (Column Shift)
B9	50 (w/o Power Seat)	J6	47 (Column Shift)		53 (Floor Shift)
	52 (Column Shift w/ Power Seat)		49 (Floor Shift)	P26	52 (Column Shift)
	53 (Floor Shift w/ Power Seat)	J9	47 (Column Shift)		53 (Floor Shift)
C6	46 (Column Shift)		49 (Floor Shift)	P27	52 (Column Shift)
	48 (Floor Shift)	J10	50		53 (Floor Shift)
C9	46 (Column Shift)	J11	50	P28	52 (Column Shift)
	48 (Floor Shift)	J14	52 (Column Shift)		53 (Floor Shift)
C13	46 (Column Shift)		53 (Floor Shift)	P29	52 (Column Shift)
	48 (Floor Shift)	L1	47 (Column Shift)		53 (Floor Shift)
D1	44		49 (Floor Shift)	P30	52 (Column Shift)
D2	46 (Column Shift)	L2	47 (Column Shift)		53 (Floor Shift)
	48 (Floor Shift)		49 (Floor Shift)	P31	52 (Column Shift)
D7	50	L6	50		53 (Floor Shift)
D8	50	L7	50	P32	52 (Column Shift)
D9	50	L8	50		53 (Floor Shift)
D10	50	L9	50	R5	47 (Column Shift)
D11	50	L10	53 (Floor Shift)		49 (Floor Shift)
D12	50	L11	53 (Floor Shift)	R11	51
D13	50	M6 D	47 (Column Shift)	R12	51
D14	50		49 (Floor Shift)	R13	51
D15	50	M7 E	47 (Column Shift)	R14	51
D16	50		49 (Floor Shift)	S4	47 (Column Shift)
D17	50	N3	51		49 (Floor Shift)
D18	50	P3	47 (Column Shift)	S11	51 (w/o Power Seat)
D19	50		49 (Floor Shift)		52 (Column Shift w/ Power Seat)
E3	44	P9	51		53 (Floor Shift w/ Power Seat)
F6 A	44	P10	51	S14	52 (Column Shift)
F7 B	44	P11	51		53 (Floor Shift)
F10 E	44	P12	51	T1	45
F14	50	P13	51	T2	45
H1	44	P14	51	T4	47 (Column Shift)
H2	44	P15	51		49 (Floor Shift)
H3	44	P18	52 (Column Shift)	U1	47 (Column Shift)
H4	44		53 (Floor Shift)		49 (Floor Shift)
I14	47 (Column Shift)	P19	52 (Column Shift)	V10	51
	49 (Floor Shift)		53 (Floor Shift)	V11	51
I17	50	P20 A	52 (Column Shift)	W6	45
J1	47 (Column Shift)		53 (Floor Shift)		

: RELAY BLOCKS

Code	See Page	Relay Blocks (Relay Block Location)
2	24	Engine Room R/B No.2 (Engine Compartment Right)
5	25	Engine Room R/B No.5 (Engine Compartment Left)

 **: JUNCTION BLOCK AND WIRE HARNESS CONNECTOR**

Code	See Page	Junction Block and Wire Harness (Connector Location)
1A	26	Instrument Panel Wire and Driver Side J/B (Lower Finish Panel)
1B	27	Cowl Wire and Driver Side J/B (Lower Finish Panel)
1C		
1D		
1G	27	Engine Room Main Wire and Driver Side J/B (Lower Finish Panel)
1I	27	Cowl Wire and Driver Side J/B (Lower Finish Panel)
1J	27	Engine Room Main Wire and Driver Side J/B (Lower Finish Panel)
1L	26	Instrument Panel Wire and Driver Side J/B (Lower Finish Panel)
2C	30	Engine Room Main Wire and Engine Room J/B (Engine Compartment Left)
2D		
2E		
2F		
2G	30	Engine Wire and Engine Room J/B (Engine Compartment Left)
3A	34	Cowl Wire and J/B No.3 (Left Kick Panel)
3B		
3C		
3D		
3E	35	Floor No.1 Wire and J/B No.3 (Left Kick Panel)
3F	35	Instrument Panel Wire and J/B No.3 (Left Kick Panel)
3G		
4A	38	Cowl Wire and J/B No.4 (Right Kick Panel)
4B		
4C		
4D		
4E	39	Floor No.2 Wire and J/B No.4 (Right Kick Panel)
4F	39	Instrument Panel Wire and J/B No.4 (Right Kick Panel)
4H		

: CONNECTOR JOINING WIRE HARNESS AND WIRE HARNESS

Code	See Page	Joining Wire Harness and Wire Harness (Connector Location)
EA1	54	Cowl Wire and Engine Room No.2 Wire (Near the Engine Room R/B No.2)
IA1	56 (Column Shift)	Floor No.1 Wire and Instrument Panel Wire (Left Kick Panel)
	60 (Floor Shift)	
IB1	56 (Column Shift)	Front Door LH Wire and Instrument Panel Wire (Left Kick Panel)
	60 (Floor Shift)	
IB2	56 (Column Shift)	
	60 (Floor Shift)	
IC1	56 (Column Shift)	Cowl Wire and Instrument Panel Wire (Left Kick Panel)
	60 (Floor Shift)	
ID1	56 (Column Shift)	Floor No.1 Wire and Cowl Wire (Left Kick Panel)
	60 (Floor Shift)	
ID2	56 (Column Shift)	
	60 (Floor Shift)	
IF1	56 (Column Shift)	Engine Room Main Wire and Cowl Wire (Left Side of Instrument Panel)
	60 (Floor Shift)	
IF3	56 (Column Shift)	
	60 (Floor Shift)	
IG1	56 (Column Shift)	Roof Wire and Cowl Wire (Front Left Pillar)
	60 (Floor Shift)	
II2	58 (Column Shift)	Engine Wire and Cowl Wire (Behind the Glove Box)
	62 (Floor Shift)	
IK1	58 (Column Shift)	Floor No.2 Wire and Cowl Wire (Right Kick Panel)
	62 (Floor Shift)	
IK2	58 (Column Shift)	
	62 (Floor Shift)	
IM2	58 (Column Shift)	Floor No.2 Wire and Instrument Panel Wire (Right Kick Panel)
	62 (Floor Shift)	
IN1	58 (Column Shift)	Front Door RH Wire and Instrument Panel Wire (Right Kick Panel)
	62 (Floor Shift)	
BA1	64	Rear Door No.2 Wire and Floor No.1 Wire (Under the Left Center Pillar)
BB1	64	Rear Door No.1 Wire and Floor No.2 Wire (Under the Right Center Pillar)
BC1	66 (Column Shift)	Floor No.1 Wire and Seat No.1 Wire (Under the Driver's Seat)
	68 (Floor Shift)	
BD1	66 (Column Shift)	Floor No.2 Wire and Seat No.2 Wire (Under the Front Passenger's Seat)
	68 (Floor Shift)	



: GROUND POINTS

Code	See Page	Ground Points Location
EA	54	Front Side of Right Fender
EB	54	Surge Tank RH
ED	54	Front Side of Left Fender
IF	56 (Column Shift)	Left Kick Panel
	60 (Floor Shift)	
IG	56 (Column Shift)	Cowl Side Panel LH
	60 (Floor Shift)	
IH	56 (Column Shift)	Instrument Panel Brace RH
	60 (Floor Shift)	
II	56 (Column Shift)	Right Kick Panel
	60 (Floor Shift)	
IJ	56 (Column Shift)	Cowl Side Panel RH
	60 (Floor Shift)	
BK	64	Rear Quarter Inner LH
BL	64	Roof Letf
BM	64	Back Panel Center
BN	64	Rear Quarter Inner RH



: SPLICE POINTS

Code	See Page	Wire Harness with Splice Points	Code	See Page	Wire Harness with Splice Points
E1	54	Engine Room No.2 Wire	B3	64	Floor No.1 Wire
E3	54	Cowl wire	B4	64	Roof Wire
I6	58 (Column Shift)	Cowl Wire	B6	64	Floor No.1 Wire
	62 (Floor Shift)		B7	64	Floor No.2 Wire
I7	58 (Column Shift)		B11		
	62 (Floor Shift)		B12	66 (Column Shift)	Seat No.1 Wire
I9	58 (Column Shift)			68 (Floor Shift)	
	62 (Floor Shift)		B13	66 (Column Shift)	
I14	58 (Column Shift)			68 (Floor Shift)	
	62 (Floor Shift)		B15	66 (Column Shift)	Seat No.2 Wire
I16	58 (Column Shift)			68 (Floor Shift)	
	62 (Floor Shift)				

AUTOMATIC LIGHT CONTROL

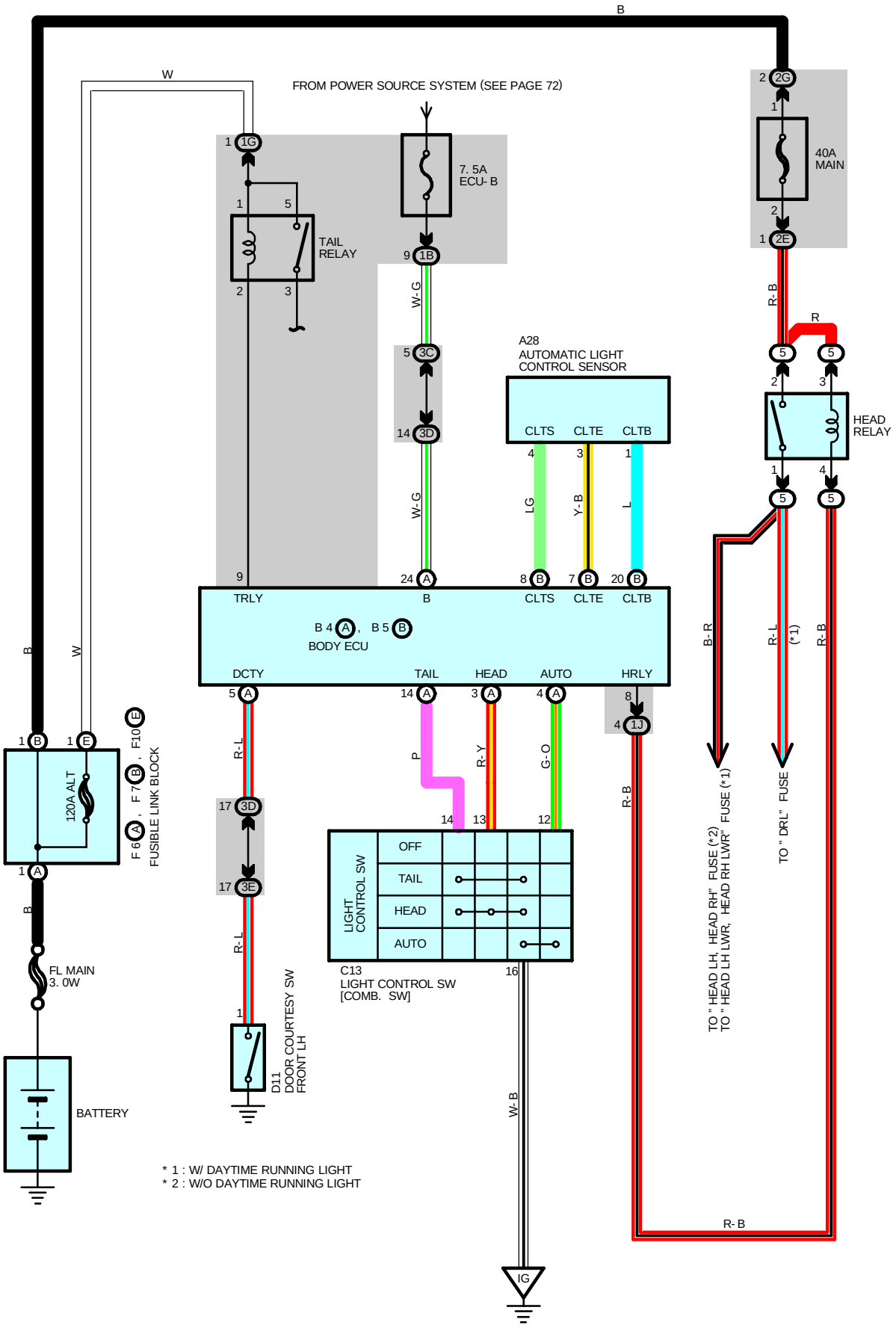

SERVICE HINTS

C13 LIGHT CONTROL SW [COMB. SW]

14-16 : Closed with light control SW at **TAIL** or **HEAD** position
13-16 : Closed with light control SW at **HEAD** position
12-16 : Closed with light control SW at **AUTO** position

D11 DOOR COURTESY SW FRONT LH

1-GROUND : Closed with driver door open

: PARTS LOCATION

Code		See Page	Code		See Page	Code		See Page
A28		46 (Column Shift) 48 (Floor Shift)	B5	B	46 (Column Shift) 48 (Floor Shift)	D11		50
B4	A	46 (Column Shift) 48 (Floor Shift)	C13		46 (Column Shift) 48 (Floor Shift)	F6	A	44
						F7	B	44
						F10	E	44

: RELAY BLOCKS

Code	See Page	Relay Blocks (Relay Block Location)
5	25	Engine Room R/B No.5 (Engine Compartment Left)

: JUNCTION BLOCK AND WIRE HARNESS CONNECTOR

Code	See Page	Junction Block and Wire Harness (Connector Location)
1B	27	Cowl Wire and Driver Side J/B (Lower Finish Panel)
1G	27	Engine Room Main Wire and Driver Side J/B (Lower Finish Panel)
1J		
2E	30	Engine Room Main Wire and Engine Room J/B (Engine Compartment Left)
2G	30	Engine Wire and Engine Room J/B (Engine Compartment Left)
3C	34	Cowl Wire and J/B No.3 (Left Kick Panel)
3D		
3E	35	Floor No.1 Wire and J/B No.3 (Left Kick Panel)

: GROUND POINTS

Code	See Page	Ground Points Location
IG	56 (Column Shift) 60 (Floor Shift)	Cowl Side Panel LH

LIGHT AUTO TURN OFF

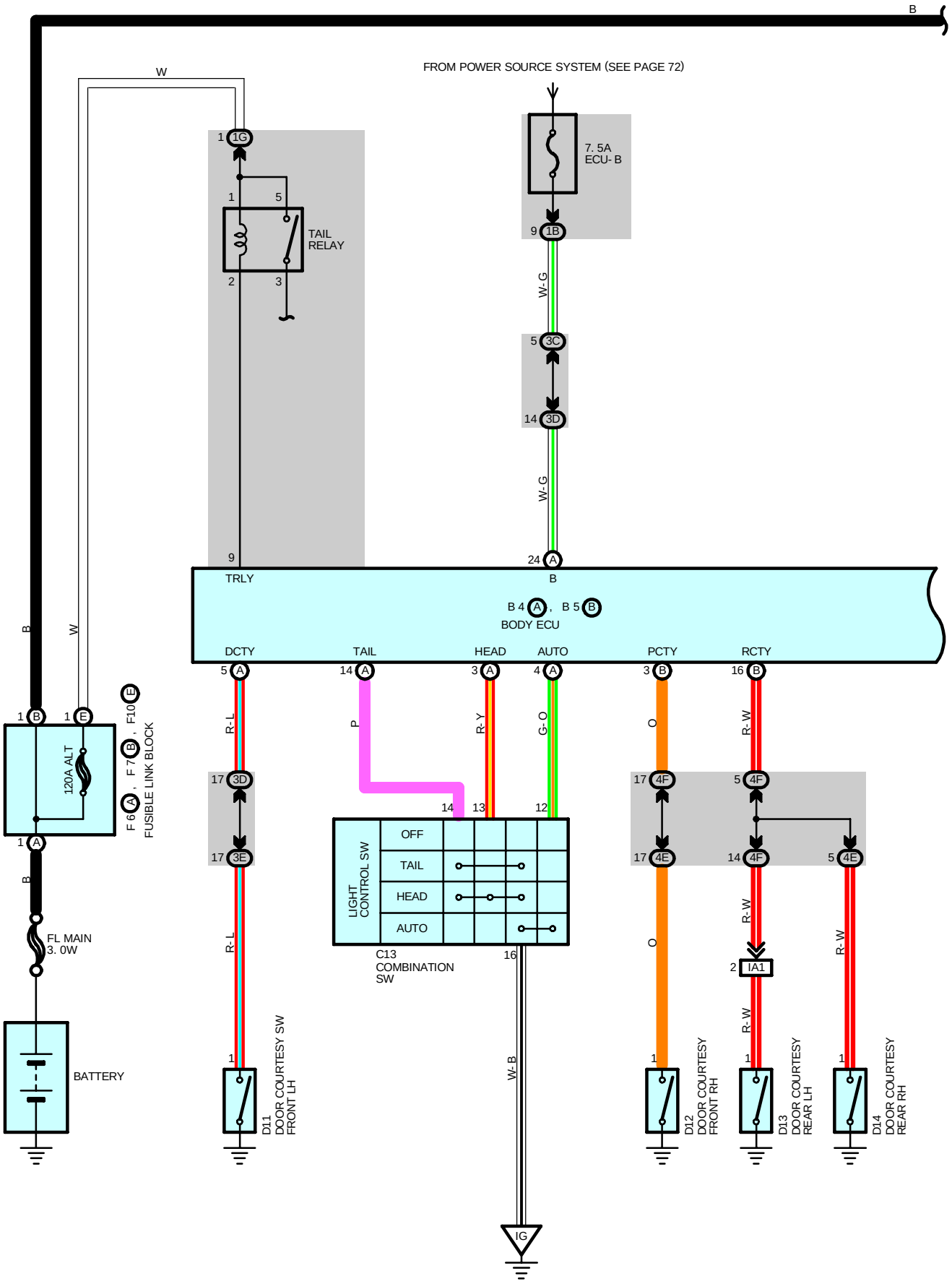

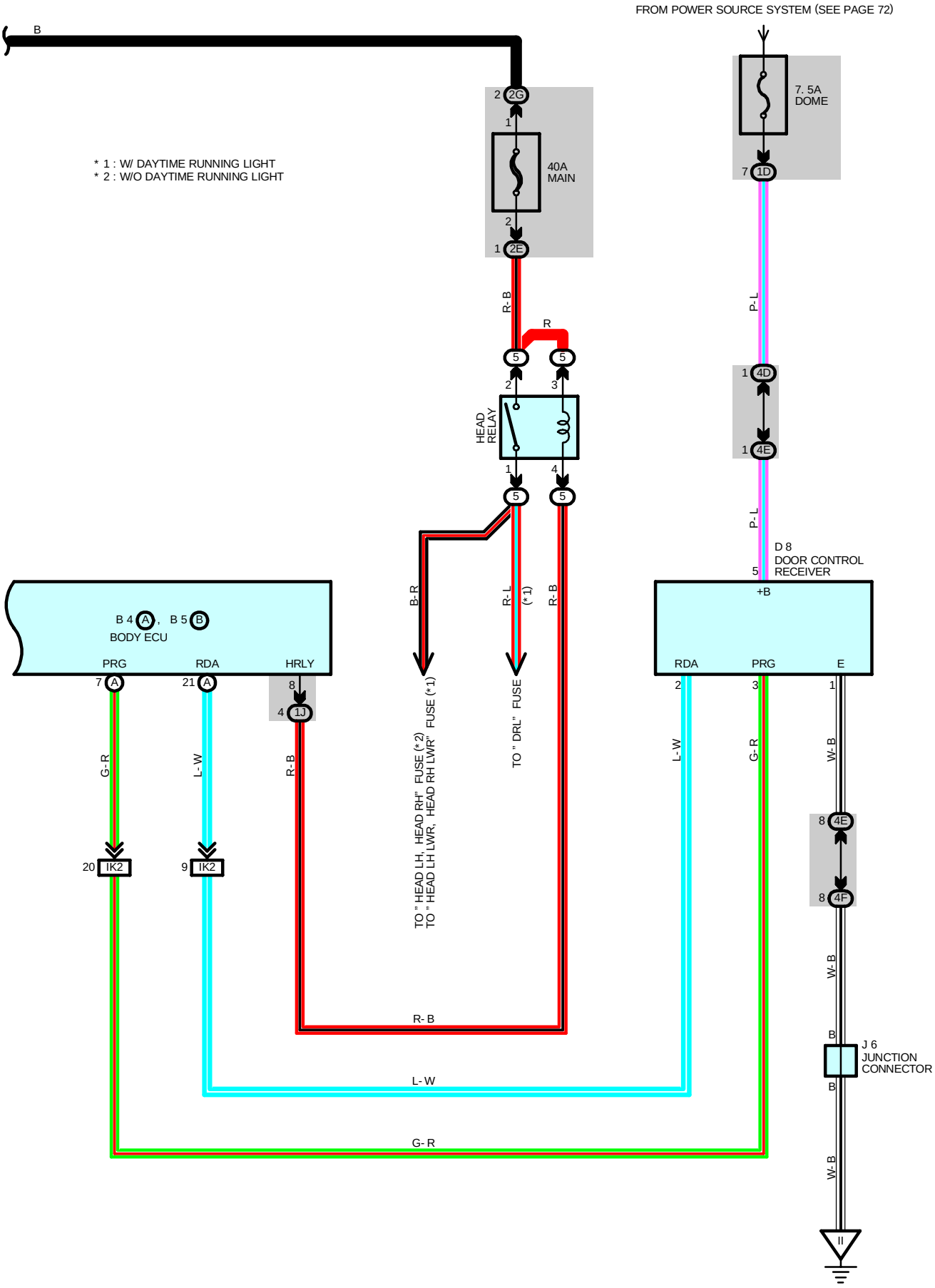
FROM POWER SOURCE SYSTEM (SEE PAGE 72)
B
* 1 : W/ DAYTIME RUNNING LIGHT
* 2 : W/O DAYTIME RUNNING LIGHT
2G
40A MAIN
2E
7. 5A DOME
1D
P- L
4D
4E
HEAD RELAY
R- B
R
B-R
R- L (*1)
TO " DRL" FUSE
TO " HEAD LH, HEAD RH" FUSE (*2)
TO " HEAD LH LWR, HEAD RH LWR" FUSE (*1)
D 8
DOOR CONTROL RECEIVER
+B
RDA
PRG
E
B 4 A , B 5 B
BODY ECU
PRG
RDA
HRLY
1J
IK2
G- R
L- W
W- B
R- B
J 6
JUNCTION CONNECTOR
4F

LIGHT AUTO TURN OFF

SYSTEM OUTLINE

When the ignition SW is turned from ON or ST position to ACC or OFF position while the taillight or headlight is ON, approximately 30 seconds after any door is opened and then closed, the taillights and headlights are turned OFF automatically.
Also, if the doors are locked with the wireless door lock within approximately 30 seconds, the taillights and headlights are turned OFF automatically.

SERVICE HINTS

C13 COMBINATION SW

14-16 : Closed with light control SW at **TAIL** or **HEAD** position
13-16 : Closed with light control SW at **HEAD** position
12-16 : Closed with light control SW at **AUTO** position

D8 DOOR CONTROL RECEIVER

5-GROUND : Always approx. **12** volts
1-GROUND : Always continuity

D11, D12, D13, D14 DOOR COURTESY SW FRONT LH, RH, REAR LH, RH

1-GROUND : Closed with the door open

: PARTS LOCATION

Code		See Page	Code		See Page	Code		See Page
B4	A	46 (Column Shift)	D8		50	F7	B	44
		48 (Floor Shift)	D11		50	F10	E	44
B5	B	46 (Column Shift)	D12		50	J6		47 (Column Shift)
		48 (Floor Shift)	D13		50			49 (Floor Shift)
C13		46 (Column Shift)	D14		50			
		48 (Floor Shift)	F6	A	44			

: RELAY BLOCKS

Code	See Page	Relay Blocks (Relay Block Location)
5	25	Engine Room R/B No.5 (Engine Compartment Left)

: JUNCTION BLOCK AND WIRE HARNESS CONNECTOR

Code	See Page	Junction Block and Wire Harness (Connector Location)
1B	27	Cowl Wire and Driver Side J/B (Lower Finish Panel)
1D		
1G	27	Engine Room Main Wire and Driver Side J/B (Lower Finish Panel)
1J		
2E	30	Engine Room Main Wire and Engine Room J/B (Engine Compartment Left)
2G	30	Engine Wire and Engine Room J/B (Engine Compartment Left)
3C	34	Cowl Wire and J/B No.3 (Left Kick Panel)
3D		
3E	35	Floor No.1 Wire and J/B No.3 (Left Kick Panel)
4D	38	Cowl Wire and J/B No.4 (Right Kick Panel)
4E	39	Floor No.2 Wire and J/B No.4 (Right Kick Panel)
4F	39	Instrument Panel Wire and J/B No.4 (Right Kick Panel)

: CONNECTOR JOINING WIRE HARNESS AND WIRE HARNESS

Code	See Page	Joining Wire Harness and Wire Harness (Connector Location)
IA1	56 (Column Shift)	Floor No.1 Wire and Instrument Panel Wire (Left Kick Panel)
	60 (Floor Shift)	
IK2	58 (Column Shift)	Floor No.2 Wire and Cowl Wire (Right Kick Panel)
	62 (Floor Shift)	

▽ **: GROUND POINTS**

Code	See Page	Ground Points Location
IG	56 (Column Shift)	Cowl Side Panel LH
	60 (Floor Shift)	
II	56 (Column Shift)	Right Kick Panel
	60 (Floor Shift)	

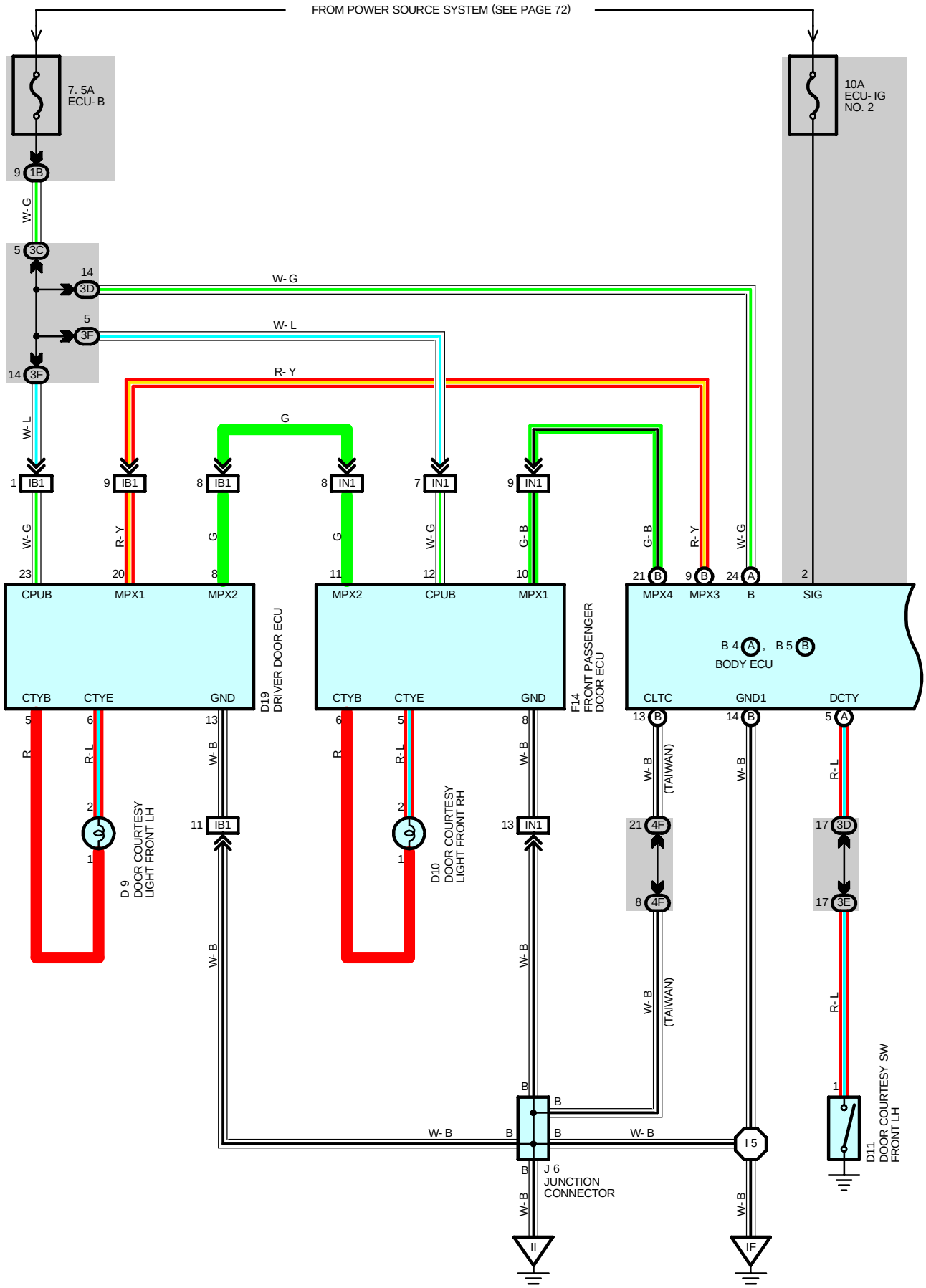
FROM POWER SOURCE SYSTEM (SEE PAGE 72)
7. 5A
ECU- B
10A
ECU- IG
NO. 2
W- G
W- L
R- Y
G
CPUB
MPX1
MPX2
MPX3
MPX4
B
SIG
CTYB
CTYE
GND
CLTC
GND1
DCTY
D19
DRIVER DOOR ECU
F14
FRONT PASSENGER
DOOR ECU
B 4 , B 5
BODY ECU
D 9
DOOR COURTESY
LIGHT FRONT LH
D10
DOOR COURTESY
LIGHT FRONT RH
D11
DOOR COURTESY SW
FRONT LH
(TAIWAN)
J 6
JUNCTION
CONNECTOR

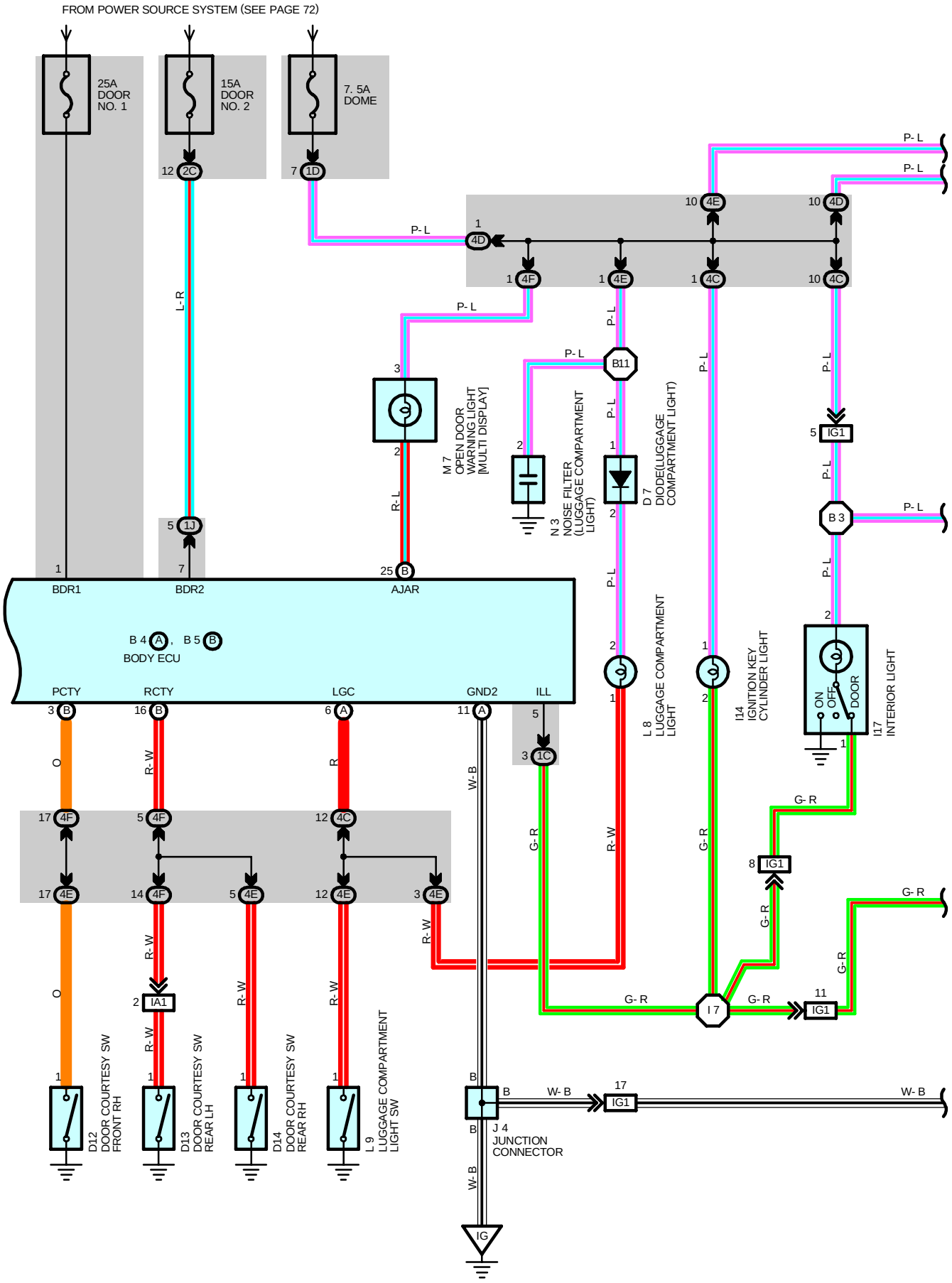
FROM POWER SOURCE SYSTEM (SEE PAGE 72)
25A DOOR NO. 1
15A DOOR NO. 2
7. 5A DOME
12 2C
7 1D
P- L
1 4D
10 4E
10 4D
1 4F
1 4E
1 4C
10 4C
L- R
P- L
3
2
R- L
25 B
M 7 OPEN DOOR WARNING LIGHT [MULTI DISPLAY]
2
N 3 NOISE FILTER (LUGGAGE COMPARTMENT LIGHT)
B11
1
2
D 7 DIODE(LUGGAGE COMPARTMENT LIGHT)
5 IG1
B 3
5 1J
7
1
BDR1
BDR2
AJAR
B 4 A , B 5 B
BODY ECU
PCTY
RCTY
LGC
GND2
ILL
3 B
16 B
6 A
11 A
5
3 1C
O
R- W
R
W- B
L 8 LUGGAGE COMPARTMENT LIGHT
I14 IGNITION KEY CYLINDER LIGHT
I17 INTERIOR LIGHT
ON
OFF
DOOR
G- R
17 4F
5 4F
12 4C
17 4E
14 4F
5 4E
12 4E
3 4E
8 IG1
2 IA1
I 7
11 IG1
D12 DOOR COURTESY SW FRONT RH
D13 DOOR COURTESY SW REAR LH
D14 DOOR COURTESY SW REAR RH
L 9 LUGGAGE COMPARTMENT LIGHT SW
B
17 IG1
J 4 JUNCTION CONNECTOR
IG

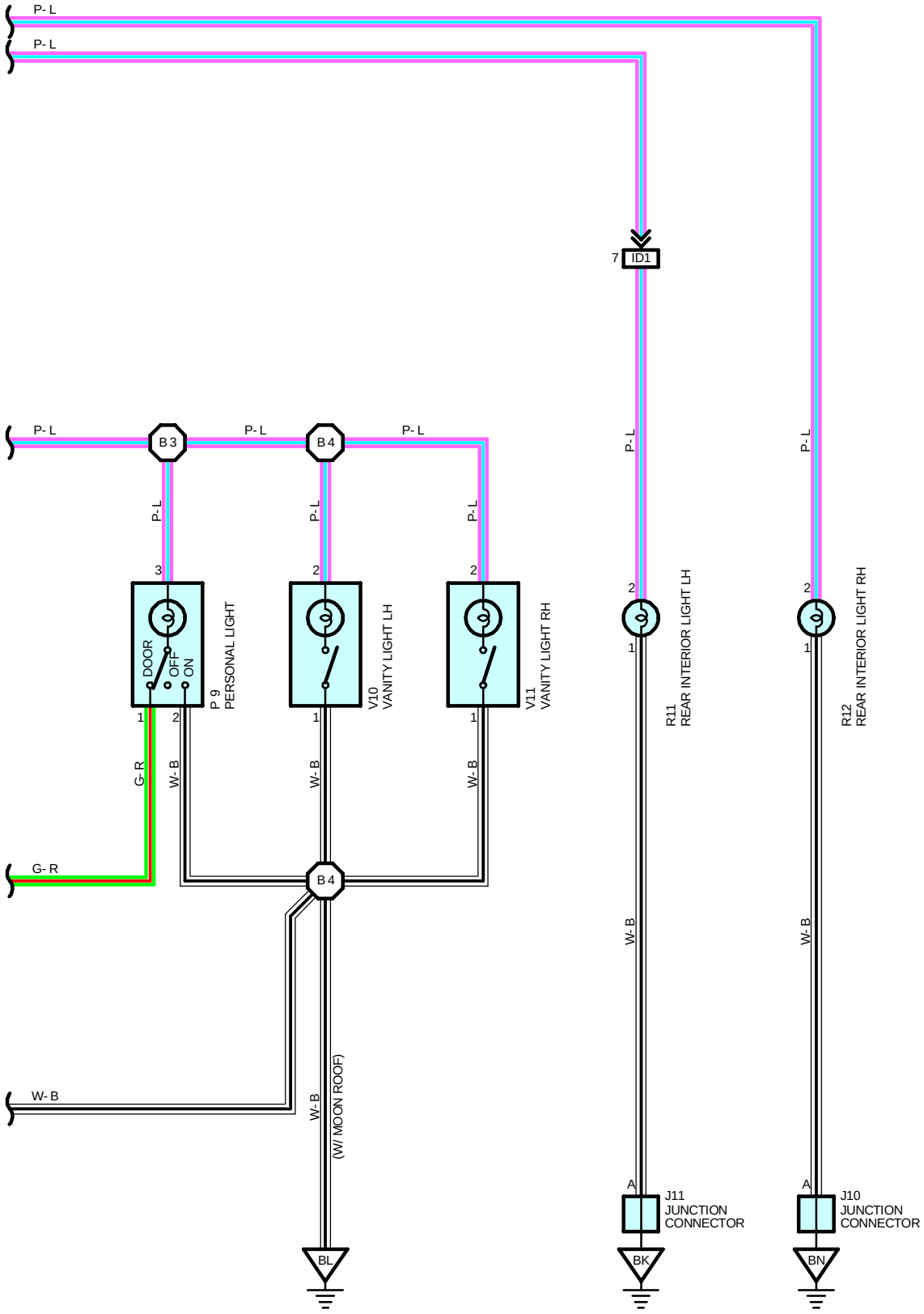
P- L
P- L
7
ID1
P- L
B 3
P- L
B 4
P- L
P- L
P- L
P- L
3
2
2
2
2
DOOR
OFF
ON
P 9
PERSONAL LIGHT
V10
VANITY LIGHT LH
V11
VANITY LIGHT RH
R11
REAR INTERIOR LIGHT LH
R12
REAR INTERIOR LIGHT RH
1
2
1
1
1
1
1
G- R
W- B
W- B
W- B
G- R
B 4
W- B
W- B
(W/ MOON ROOF)
W- B
W- B
A
A
J11
JUNCTION
CONNECTOR
J10
JUNCTION
CONNECTOR
BL
BK
BN

SYSTEM OUTLINE

In this system, the following functions operate through the communication control among the body ECU:
When any door is opened, the lights come on.
With the ignition SW OFF, when a door is closed remaining no door open, the lights come on for approximately 15 seconds.
With all the doors are closed and locked, when the driver's side or front passenger's side door is unlocked either using the ignition key or the transmitter, the lights come on for approximately 15 seconds.

SERVICE HINTS

D11, D12, D13, D14 DOOR COURTESY SW FRONT LH, RH REAR LH, RH

1-GROUND : Closed with door open

B4 (A), B5 (B) BODY ECU

1-GROUND : Always approx. **12** volts
2-GROUND : Approx. **12** volts with ignition SW at **ON** or **ST** position
7-GROUND : Always approx. **12** volts
(A)24-GROUND : Always approx. **12** volts
(A)11-GROUND : Always continuity
(B)14-GROUND : Always continuity

: PARTS LOCATION

Code		See Page	Code	See Page	Code	See Page
B4	A	46 (Column Shift)	D19	50	L8	50
		48 (Floor Shift)	F14	50	L9	50
B5	B	46 (Column Shift)	I14	47 (Column Shift)	M7	47 (Column Shift)
		48 (Floor Shift)		49 (Floor Shift)		49 (Floor Shift)
D7		50	I17	50	N3	51
D9		50	J4	47 (Column Shift)	P9	51
D10		50		49 (Floor Shift)	R11	51
D11		50	J6	47 (Column Shift)	R12	51
D12		50		49 (Floor Shift)	V10	51
D13		50	J10	50	V11	51
D14		50	J11	50		

: JUNCTION BLOCK AND WIRE HARNESS CONNECTOR

Code	See Page	Junction Block and Wire Harness (Connector Location)
1B	27	Cowl Wire and Driver Side J/B (Lower Finish Panel)
1C		
1D		
1J	27	Engine Room Main Wire and Driver Side J/B (Lower Finish Panel)
2C	30	Engine Room Main Wire and Engine Room J/B (Engine Compartment Left)
3C	34	Cowl Wire and J/B No.3 (Left Kick Panel)
3D		
3E	35	Floor No.1 Wire and J/B No.3 (Left Kick Panel)
3F	35	Instrument Panel Wire and J/B No.3 (Left Kick Panel)
4C	38	Cowl Wire and J/B No.4 (Right Kick Panel)
4D		
4E	39	Floor No.2 Wire and J/B No.4 (Right Kick Panel)
4F	39	Instrument Panel Wire and J/B No.4 (Right Kick Panel)

INTERIOR LIGHT

: CONNECTOR JOINING WIRE HARNESS AND WIRE HARNESS

Code	See Page	Joining Wire Harness and Wire Harness (Connector Location)
IA1	56 (Column Shift) 60 (Floor Shift)	Floor No.1 Wire and Instrument Panel Wire (Left Kick Panel)
IB1	56 (Column Shift) 60 (Floor Shift)	Front Door LH Wire and Instrument Panel Wire (Left Kick Panel)
ID1	56 (Column Shift) 60 (Floor Shift)	Floor No.1 Wire and Cowl Wire (Left Kick Panel)
IG1	56 (Column Shift) 60 (Floor Shift)	Roof Wire and Cowl Wire (Front Left Pillar)
IN1	58 (Column Shift) 62 (Floor Shift)	Front Door RH Wire and Instrument Panel Wire (Right Kick Panel)

: GROUND POINTS

Code	See Page	Ground Points Location
IF	56 (Column Shift) 60 (Floor Shift)	Left Kick Panel
IG	56 (Column Shift) 60 (Floor Shift)	Cowl Side Panel LH
II	56 (Column Shift) 60 (Floor Shift)	Right Kick Panel
BK	64	Rear Quarter Inner LH
BL	64	Roof Left
BN	64	Rear Quarter Inner RH

: SPLICE POINTS

Code	See Page	Wire Harness with Splice Points	Code	See Page	Wire Harness with Splice Points
I5	58 (Column Shift) 62 (Floor Shift)	Instrument Panel Wire	B3	64	Floor No.1 Wire
			B4	64	Roof Wire
I7	58 (Column Shift) 62 (Floor Shift)	Cowl Wire	B11	64	Floor No.2 Wire

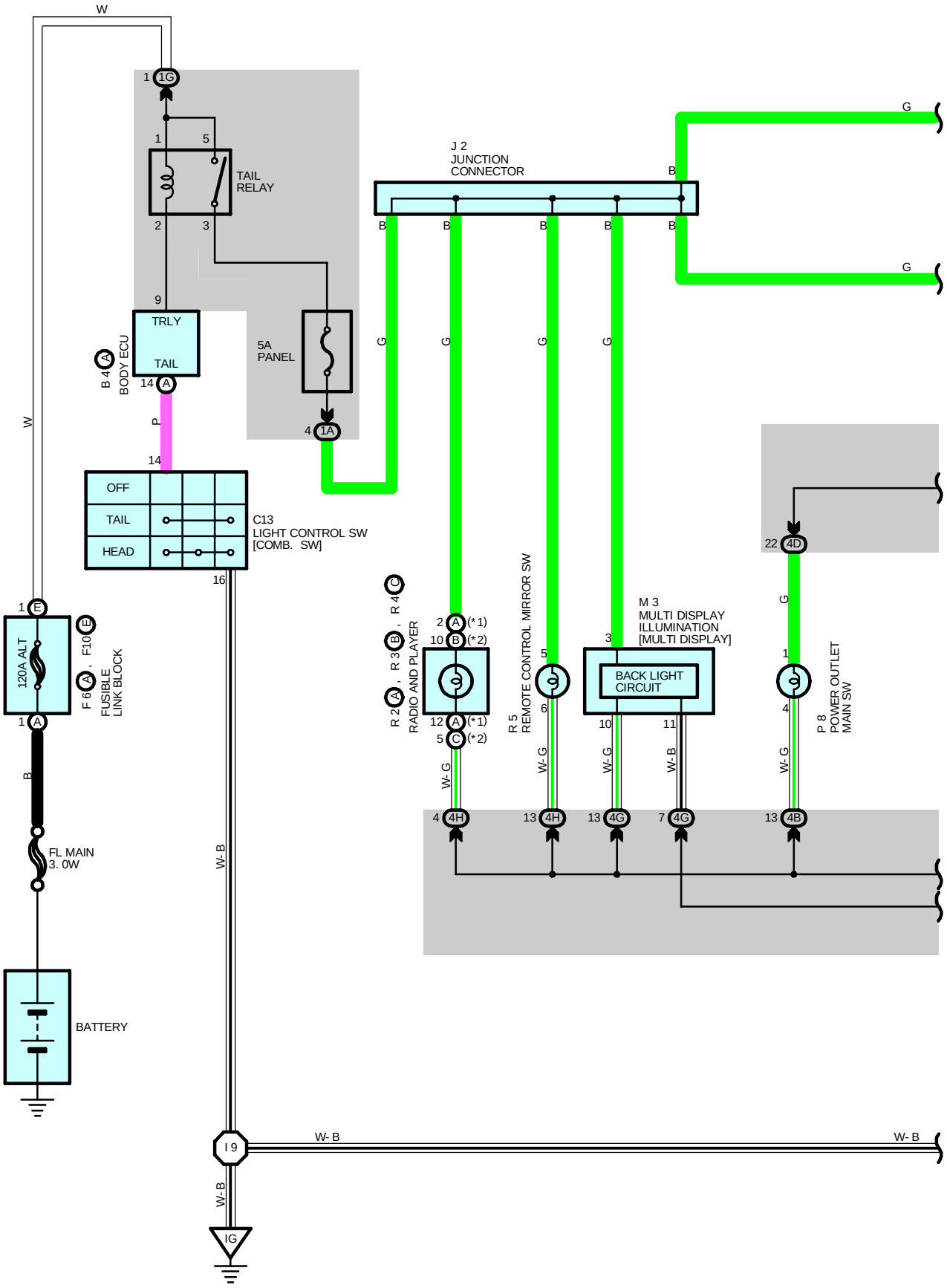
W
1G
TAIL RELAY
TRLY TAIL
B 4 BODY ECU
5A PANEL
J 2 JUNCTION CONNECTOR
G
OFF
TAIL
HEAD
C13 LIGHT CONTROL SW [COMB. SW]
120A ALT
F 6 , F10 FUSIBLE LINK BLOCK
FL MAIN 3. 0W
BATTERY
R 2 , R 3 , R 4 RADIO AND PLAYER
R 5 REMOTE CONTROL MIRROR SW
M 3 MULTI DISPLAY ILLUMINATION [MULTI DISPLAY]
BACK LIGHT CIRCUIT
P 8 POWER OUTLET MAIN SW
W-G
W-B
I 9
IG

* 1 : 7 SPEAKER
* 2 : 6 SPEAKER
* 3 : MANUAL A/C
* 4 : AUTOMATIC A/C
* 5 : FLOOR SHIFT

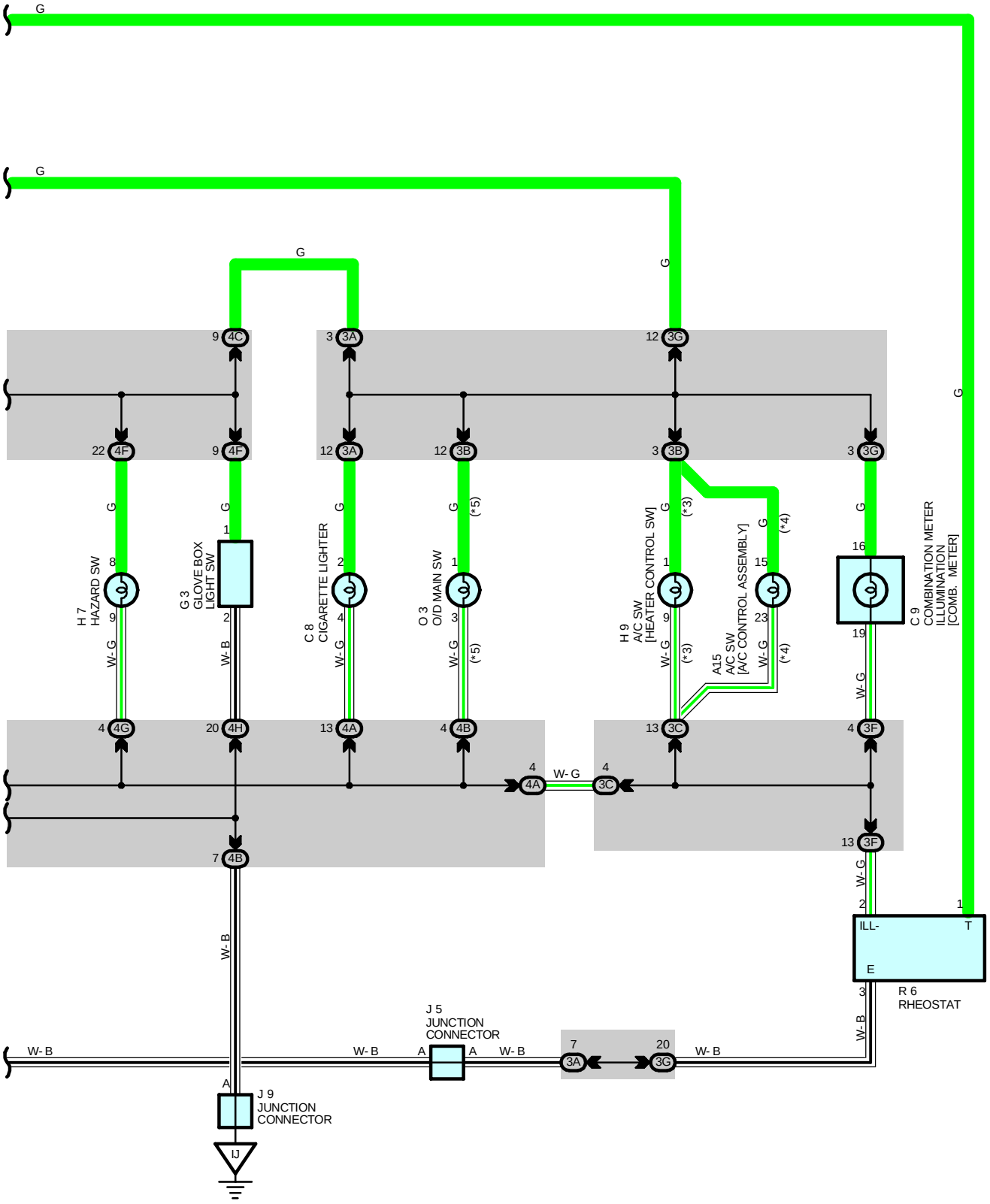

ILLUSTRATION

SERVICE HINTS

TAIL RELAY

5-3 : Closed with the light control SW at **TAIL** or **HEAD** position

C13 LIGHT CONTROL SW [COMB. SW]

14-16 : Closed with the light control SW at **TAIL** or **HEAD** position

○ : PARTS LOCATION

Code	See Page	Code	See Page	Code	See Page
A15	46 (Column Shift) 48 (Floor Shift)	H7	47 (Column Shift) 49 (Floor Shift)	P8	47 (Column Shift) 49 (Floor Shift)
B4 A	46 (Column Shift) 48 (Floor Shift)	H9	47 (Column Shift) 49 (Floor Shift)	R2 A	47 (Column Shift) 49 (Floor Shift)
C8	46 (Column Shift) 48 (Floor Shift)	J2	47 (Column Shift) 49 (Floor Shift)	R3 B	47 (Column Shift) 49 (Floor Shift)
C9	46 (Column Shift) 48 (Floor Shift)	J5	47 (Column Shift) 49 (Floor Shift)	R4 C	47 (Column Shift) 49 (Floor Shift)
C13	46 (Column Shift) 48 (Floor Shift)	J9	47 (Column Shift) 49 (Floor Shift)	R5	47 (Column Shift) 49 (Floor Shift)
F6 A	44	M3	47 (Column Shift) 49 (Floor Shift)	R6	47 (Column Shift) 49 (Floor Shift)
F10 E	44				
G3	47 (Column Shift) 49 (Floor Shift)	O3	47 (Column Shift) 49 (Floor Shift)		

⬭ : JUNCTION BLOCK AND WIRE HARNESS CONNECTOR

Code	See Page	Junction Block and Wire Harness (Connector Location)
1A	26	Instrument Panel Wire and Driver Side J/B (Lower Finish Panel)
1G	27	Engine Room Main Wire and Driver Side J/B (Lower Finish Panel)
3A 3B 3C	34	Cowl Wire and J/B No.3 (Left Kick Panel)
3F 3G	35	Instrument Panel Wire and J/B No.3 (Left Kick Panel)
4A 4B 4C 4D	38	Cowl Wire and J/B No.4 (Right Kick Panel)
4F 4G 4H	39	Instrument Panel Wire and J/B No.4 (Right Kick Panel)

▽ : GROUND POINTS

Code	See Page	Ground Points Location
IG	56 (Column Shift) 60 (Floor Shift)	Cowl Side Panel LH
IJ	56 (Column Shift) 60 (Floor Shift)	Cowl Side Panel RH

⯃ : SPLICE POINTS

Code	See Page	Wire Harness with Splice Points	Code	See Page	Wire Harness with Splice Points
I9	58 (Column Shift)	Cowl Wire	I9	62 (Floor Shift)	Cowl Wire

TURN SIGNAL AND HAZARD WARNING LIGHT

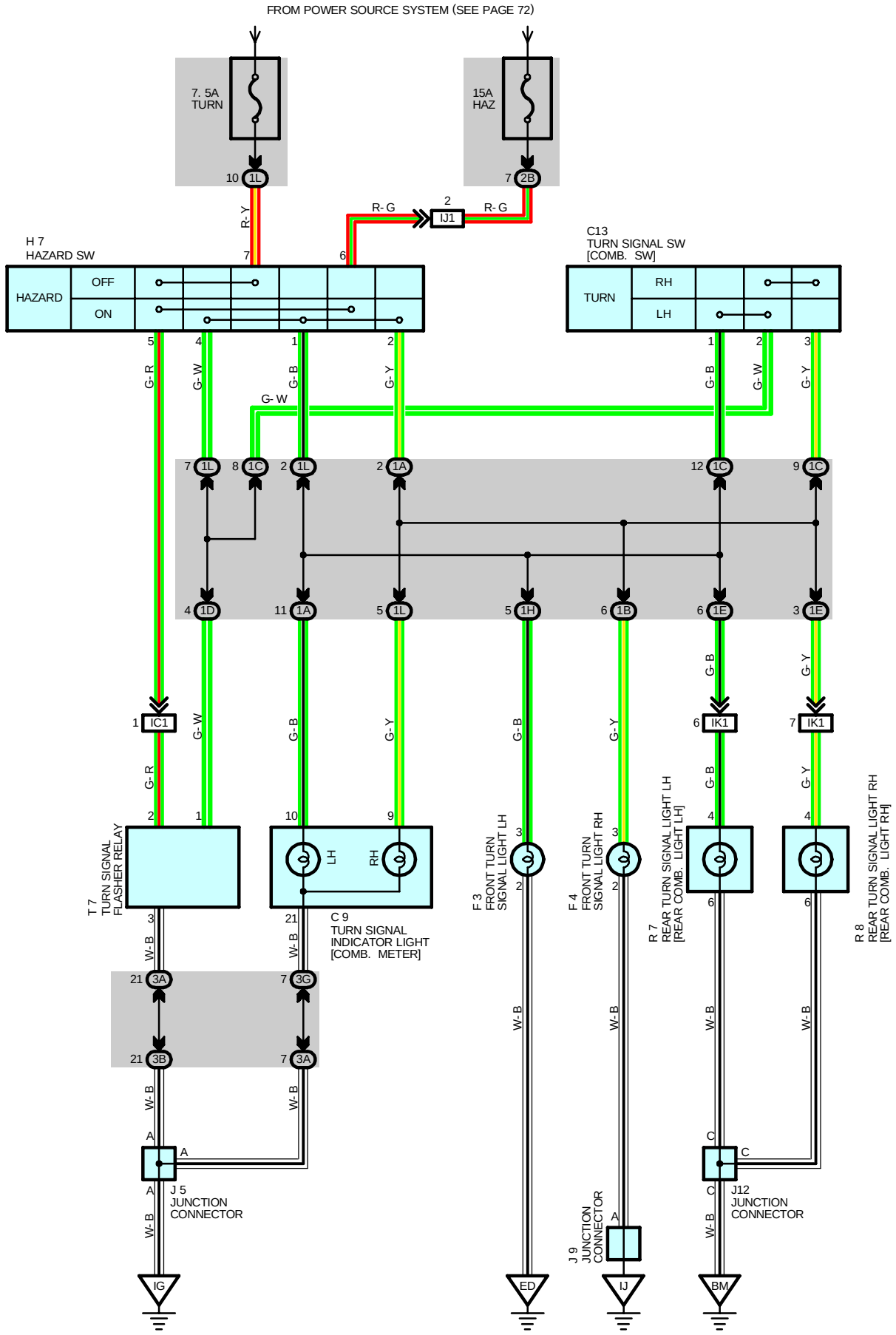

SERVICE HINTS

T7 TURN SIGNAL FLASHER RELAY

2-GROUND : Approx. **12** volts with the ignition SW on or the hazard SW on
1-GROUND : Changes from **12** to **0** volts with the ignition SW on and the turn signal SW at **LH** or **RH** position and with the hazard SW on
3-GROUND : Always continuity

: PARTS LOCATION

Code	See Page	Code	See Page	Code	See Page
C9	46 (Column Shift)	H7	47 (Column Shift)	J12	50
	48 (Floor Shift)		49 (Floor Shift)	R7	51
C13	46 (Column Shift)	J5	47 (Column Shift)	R8	51
	48 (Floor Shift)		49 (Floor Shift)	T7	47 (Column Shift)
F3	44	J9	47 (Column Shift)		49 (Floor Shift)
F4	44		49 (Floor Shift)		

: JUNCTION BLOCK AND WIRE HARNESS CONNECTOR

Code	See Page	Junction Block and Wire Harness (Connector Location)
1A	26	Instrument Panel Wire and Driver Side J/B (Lower Finish Panel)
1B	27	Cowl Wire and Driver Side J/B (Lower Finish Panel)
1C		
1D		
1E		
1H	27	Engine Room Main Wire and Driver Side J/B (Lower Finish Panel)
1L	26	Instrument Panel Wire and Driver Side J/B (Lower Finish Panel)
2B	30	Engine Wire and Engine Room J/B (Engine Compartment Left)
3A	34	Cowl Wire and J/B No.3 (Left Kick Panel)
3B		
3G	35	Instrument Panel Wire and J/B No.3 (Left Kick Panel)

: CONNECTOR JOINING WIRE HARNESS AND WIRE HARNESS

Code	See Page	Joining Wire Harness and Wire Harness (Connector Location)
IC1	56 (Column Shift)	Cowl Wire and Instrument Panel Wire (Left Kick Panel)
	60 (Floor Shift)	
IJ1	58 (Column Shift)	Engine Wire and Instrument Panel Wire (Right Kick Panel)
	62 (Floor Shift)	
IK1	58 (Column Shift)	Floor No.2 Wire and Cowl Wire (Right Kick Panel)
	62 (Floor Shift)	

: GROUND POINTS

Code	See Page	Ground Points Location
ED	54	Front Side of Left Fender
IG	56 (Column Shift)	Cowl Side Panel LH
	60 (Floor Shift)	
IJ	56 (Column Shift)	Cowl Side Panel RH
	60 (Floor Shift)	
BM	64	Back Panel Center

TAILLIGHT AND STOP LIGHT

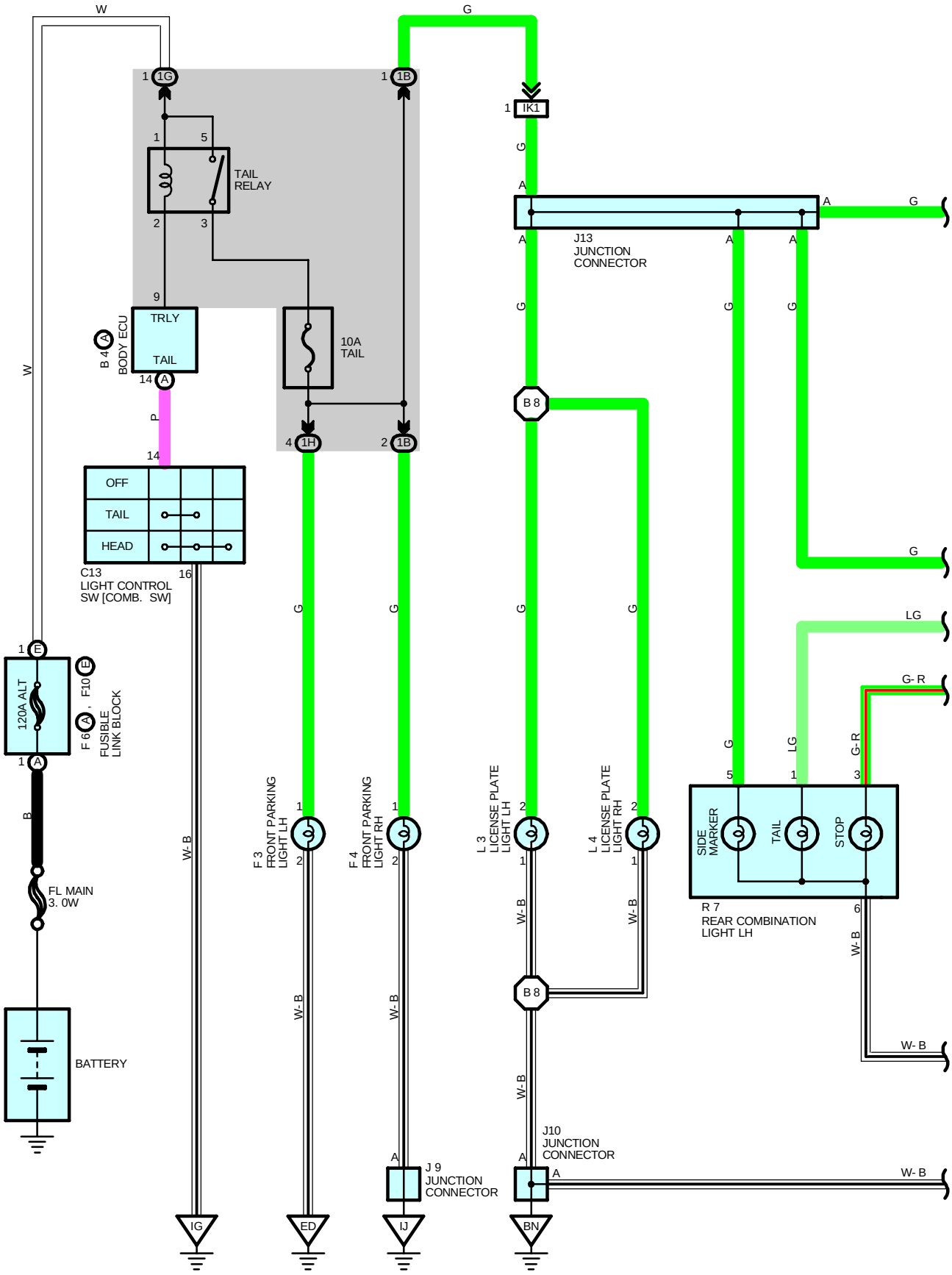

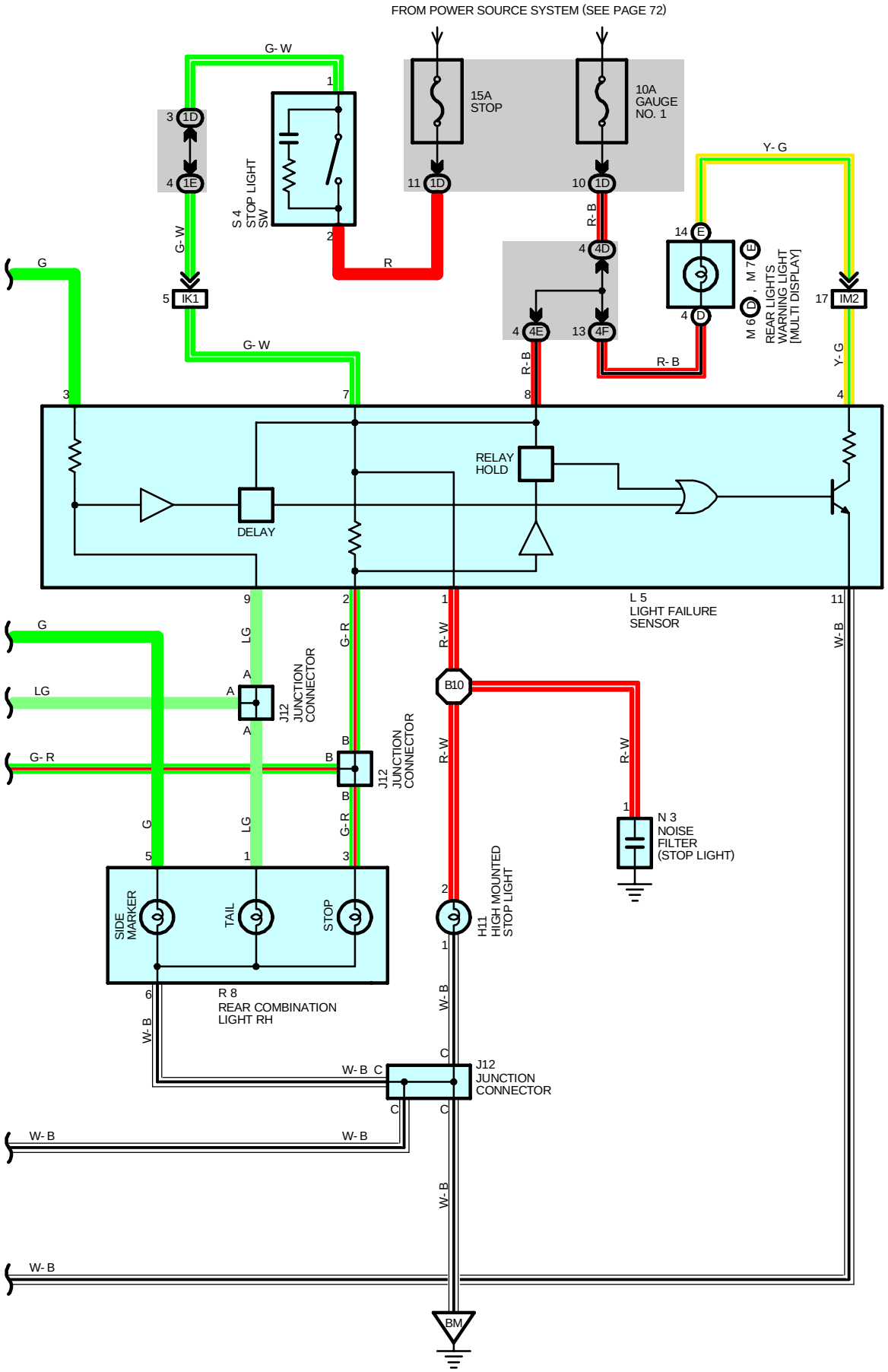
FROM POWER SOURCE SYSTEM (SEE PAGE 72)
G- W
15A
STOP
10A
GAUGE
NO. 1
Y- G
S 4
STOP LIGHT
SW
R
R- B
G- W
G
IK1
IM2
M 6 , M 7
REAR LIGHTS
WARNING LIGHT
[MULTI DISPLAY]
RELAY
HOLD
DELAY
L 5
LIGHT FAILURE
SENSOR
LG
G- R
R- W
W- B
B10
J12
JUNCTION
CONNECTOR
N 3
NOISE
FILTER
(STOP LIGHT)
H11
HIGH MOUNTED
STOP LIGHT
SIDE
MARKER
TAIL
STOP
R 8
REAR COMBINATION
LIGHT RH
BM

TAILLIGHT AND STOP LIGHT

SYSTEM OUTLINE

TAILLIGHT DISCONNECTION WARNING

If any of the taillights are disconnected when the light control SW is at TAIL or HEAD while the ignition SW is ON, the light failure sensor detects the voltage difference, and blinks the rear lights warning light to warn the driver.

STOP LIGHT DISCONNECTION WARNING

If any of the stop lights are disconnected when the brake pedal is depressed while the ignition SW is ON, the light failure sensor detects the voltage difference, and blinks the rear lights warning light to warn the driver.

SERVICE HINTS

TAIL RELAY

5-3 : Closed with the light control SW at **TAIL** or **HEAD** position

L5 LIGHT FAILUER SENSOR

7-GROUND : Approx. **12** volts with stop light SW on
3-GROUND : Approx. **12** volts with the light control SW at **TAIL** or **HEAD** position
4, 8-GROUND : Approx. **12** volts with the ignition SW at **ON** position
11-GROUND : Always continuity

S4 STOP LIGHT SW

1-2 : Closed with brake pedal depressed

: PARTS LOCATION

Code	See Page	Code	See Page	Code	See Page
B4 A	46 (Column Shift) 48 (Floor Shift)	J9	47 (Column Shift) 49 (Floor Shift)	M6 D	49 (Floor Shift)
C13	46 (Column Shift) 48 (Floor Shift)	J10	50	M7 E	47 (Column Shift) 49 (Floor Shift)
F3	44	J12	50	N3	51
F4	44	J13	50	R7	51
F6 A	44	L3	50	R8	51
F10 E	44	L4	50	S4	47 (Column Shift) 49 (Floor Shift)
H11	50	L5	50		
		M6 D	47 (Column Shift)		

: JUNCTION BLOCK AND WIRE HARNESS CONNECTOR

Code	See Page	Junction Block and Wire Harness (Connector Location)
1B 1D 1E	27	Cowl Wire and Driver Side J/B (Lower Finish Panel)
1G 1H	27	Engine Room Main Wire and Driver Side J/B (Lower Finish Panel)
4D	38	Cowl Wire and J/B No.4 (Right Kick Panel)
4E	39	Floor No.2 Wire and J/B No.4 (Right Kick Panel)
4F	39	Instrument Panel Wire and J/B No.4 (Right Kick Panel)

: CONNECTOR JOINING WIRE HARNESS AND WIRE HARNESS

Code	See Page	Joining Wire Harness and Wire Harness (Connector Location)
IK1	58 (Column Shift) 62 (Floor Shift)	Floor No.2 Wire and Cowl Wire (Right Kick Panel)
IM2	58 (Column Shift) 62 (Floor Shift)	Floor No.2 Wire and Instrument Panel Wire (Right Kick Panel)

: GROUND POINTS

Code	See Page	Ground Points Location
ED	54	Front Side of Left Fender
IG	56 (Column Shift) 60 (Floor Shift)	Cowl Side Panel LH
IJ	56 (Column Shift) 60 (Floor Shift)	Cowl Side Panel RH
BM	64	Back Panel Center
BN	64	Rear Quarter Inner RH

: SPLICE POINTS

Code	See Page	Wire Harness with Splice Points	Code	See Page	Wire Harness with Splice Points
B8	64	Floor No.2 Wire	B10	64	Floor No.2 Wire

BACK-UP LIGHT

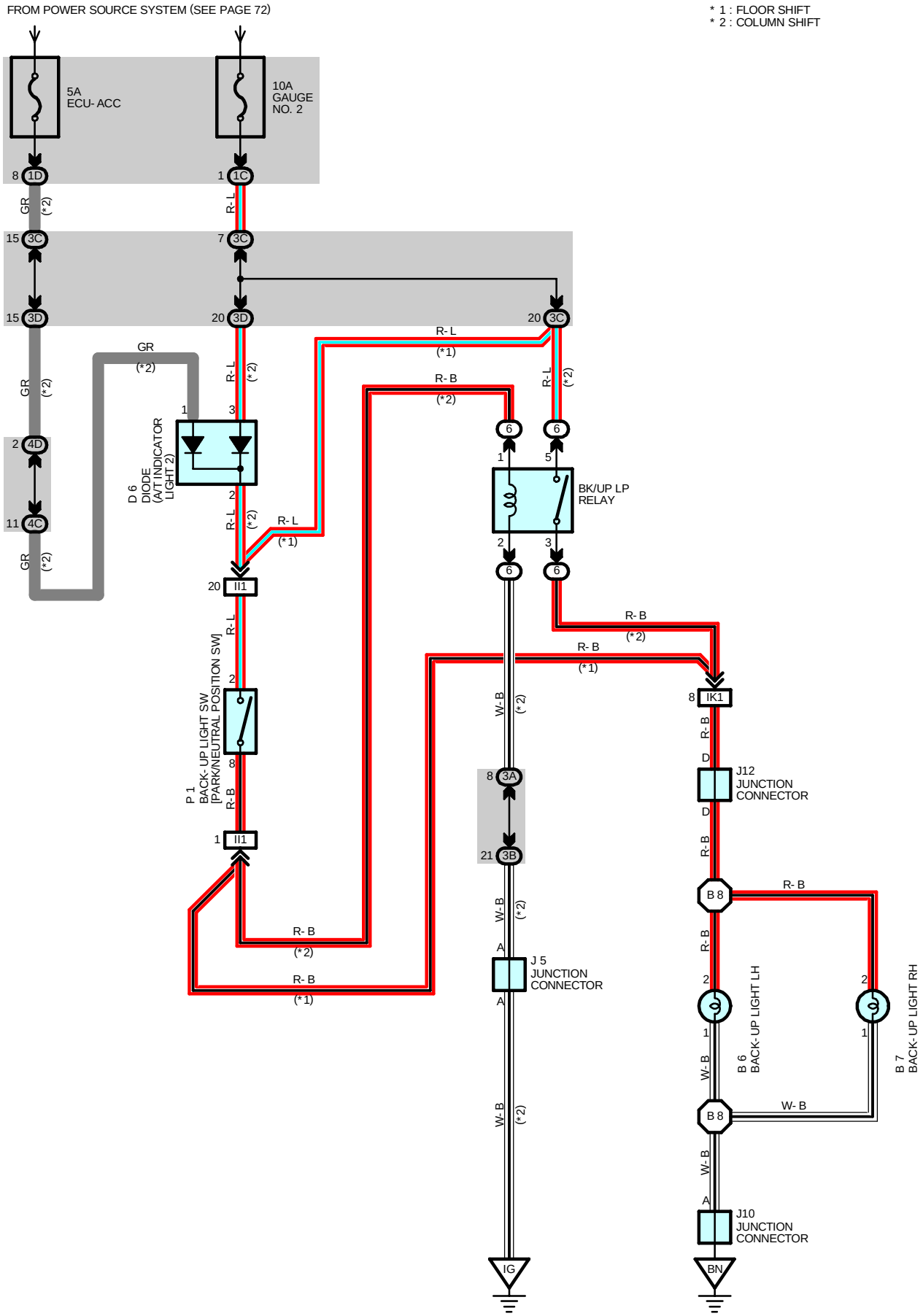

SERVICE HINTS

BACK-UP RELAY

5-3 : Closed with the ignition SW at **ON** position and the shift lever at **R** position (Column shift)

P1 BACK-UP LIGHT SW [PARK/NEUTRAL POSITION SW]

2-8 : Closed with the shift lever at **R** position

: PARTS LOCATION

Code	See Page	Code	See Page	Code	See Page
B6	50	J5	47 (Column Shift)	J12	50
B7	50		49 (Floor Shift)	P1	45
D6	46 (Column Shift)	J10	50		

: RELAY BLOCKS

Code	See Page	Relay Blocks (Relay Block Location)
6	42	Driver Side R/B No.6 (Left Kick Panel)

: JUNCTION BLOCK AND WIRE HARNESS CONNECTOR

Code	See Page	Junction Block and Wire Harness (Connector Location)
1C	27	Cowl Wire and Driver Side J/B (Lower Finish Panel)
1D		
3A	34	Cowl Wire and J/B No.3 (Left Kick Panel)
3B		
3C		
3D		
4C	38	Cowl Wire and J/B No.4 (Right Kick Panel)
4D		

: CONNECTOR JOINING WIRE HARNESS AND WIRE HARNESS

Code	See Page	Joining Wire Harness and Wire Harness (Connector Location)
II1	58 (Column Shift)	Engine Wire and Cowl Wire (Behind the Glove Box)
	62 (Floor Shift)	
IK1	58 (Column Shift)	Floor No.2 Wire and Cowl Wire (Right Kick Panel)
	62 (Floor Shift)	

: GROUND POINTS

Code	See Page	Ground Points Location
IG	56 (Column Shift)	Cowl Side Panel LH
	60 (Floor Shift)	
BN	64	Rear Quater Inner RH

: SPLICE POINTS

Code	See Page	Wire Harness with Splice Points	Code	See Page	Wire Harness with Splice Points
B8	64	Floor No.2 Wire			

KEY REMINDER AND SEAT BELT WARNING

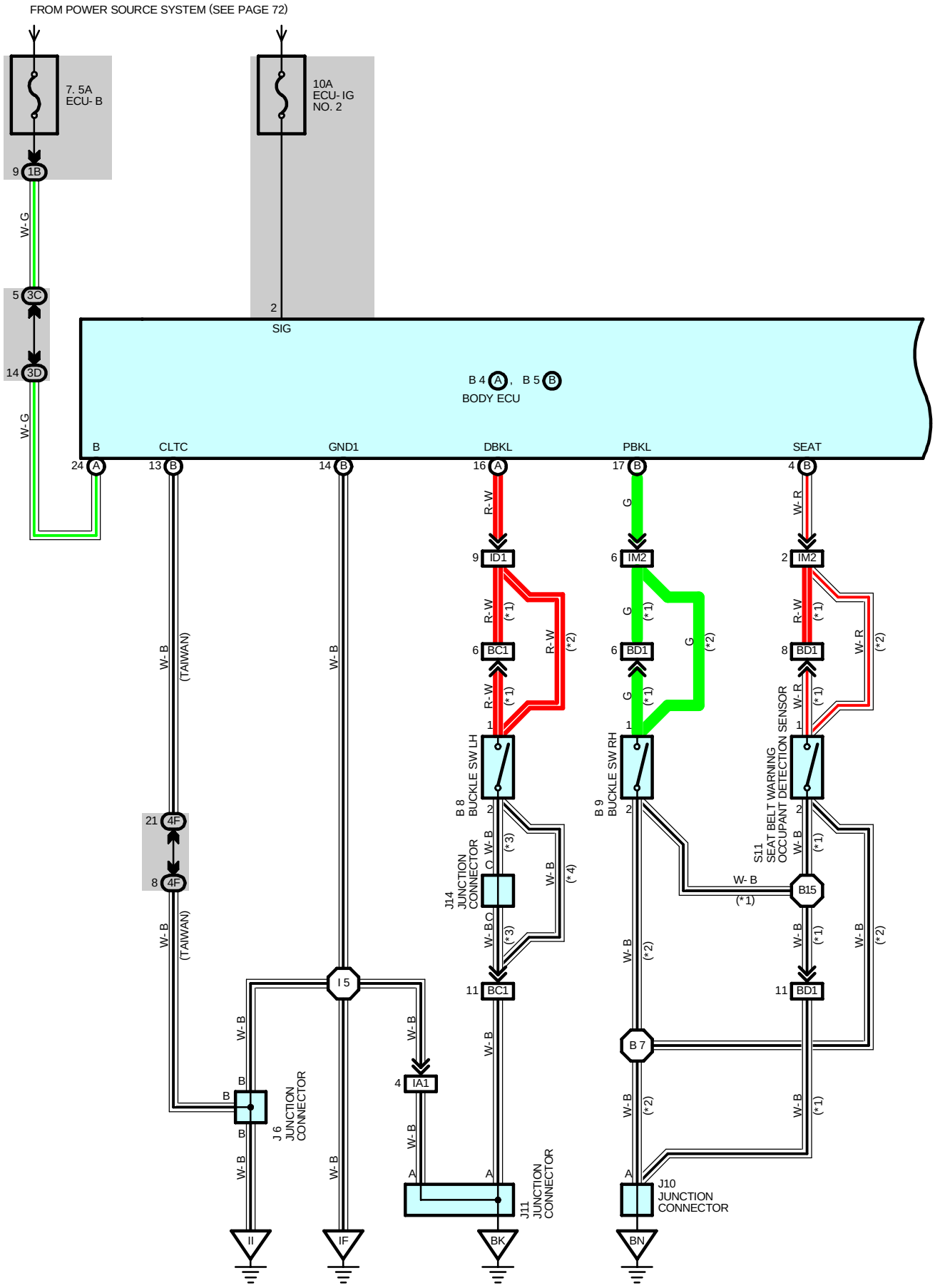

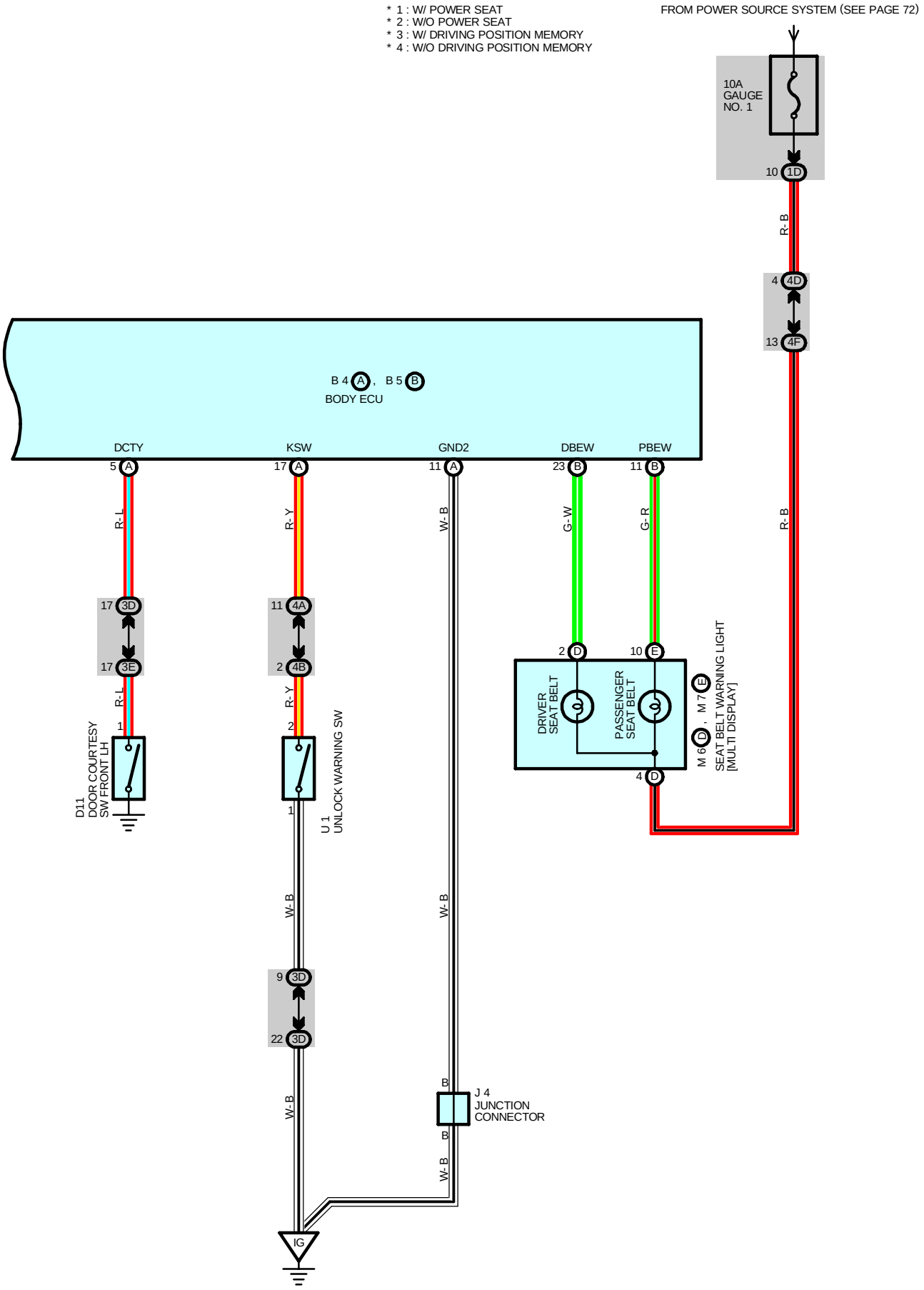
* 1 : W/ POWER SEAT
* 2 : W/O POWER SEAT
* 3 : W/ DRIVING POSITION MEMORY
* 4 : W/O DRIVING POSITION MEMORY
FROM POWER SOURCE SYSTEM (SEE PAGE 72)
10A GAUGE NO. 1
10 1D
R-B
4 4D
13 4F
B 4 A , B 5 B
BODY ECU
DCTY
KSW
GND2
DBEW
PBEW
5 A
17 A
11 A
23 B
11 B
R-L
R-Y
W-B
G-W
G-R
R-B
17 3D
17 3E
11 4A
2 4B
2 D
10 E
DRIVER SEAT BELT
PASSENGER SEAT BELT
M 6 D , M 7 E
SEAT BELT WARNING LIGHT [MULTI DISPLAY]
4 D
D11 DOOR COURTESY SW FRONT LH
1
U 1 UNLOCK WARNING SW
9 3D
22 3D
B
J 4 JUNCTION CONNECTOR
IG

KEY REMINDER AND SEAT BELT WARNING

SYSTEM OUTLINE

1. SEAT BELT WARNING SYSTEM

When the driver has not fastened the seat belt while the ignition SW is ON, the driver seat belt warning light blinks, and a warning buzzer comes on.
Also, in the front passenger seat, a sensor recognizes a passenger, and when the passenger has not fastened the seat belt, the front passenger seat belt warning light blinks.

2. KEY REMINDER SYSTEM

When the ignition key is remaining in the key cylinder with the ignition SW at ACC of OFF position (Unlock warning SW ON), and the driver's door is opened, a buzzer comes on, and reminds the driver that the ignition key is in the key cylinder.

SERVICE HINTS

D11 DOOR COURTESY SW FRONT LH

1-GROUND : Closed with the door open

U1 UNLOCK WARNING SW

1-2 : Closed with the ignition key in cylinder

S11 SEAT BELT WARNING OCCUPANT DETECTION SENSOR

1-2 : Closed with passenger sit on the front passenger seat

: PARTS LOCATION

Code		See Page
B4	A	46 (Column Shift)
		48 (Floor Shift)
B5	B	46 (Column Shift)
		48 (Floor Shift)
B8		50 (w/o Power Seat)
		52 (Column Shift w/ Power Seat)
		53 (Floor Shift w/ Power Seat)
B9		50 (w/o Power Seat)
		52 (Column Shift w/ Power Seat)
		53 (Floor Shift w/ Power Seat)

Code		See Page
D11		50
J4		47 (Column Shift)
		49 (Floor Shift)
J6		47 (Column Shift)
		49 (Floor Shift)
J10		50
J11		50
J14		52 (Column Shift)
		53 (Floor Shift)
M6	D	47 (Column Shift)

Code		See Page
M6	D	49 (Floor Shift)
M7	E	47 (Column Shift)
		49 (Floor Shift)
S11		51 (w/o Power Seat)
		52 (Column Shift w/ Power Seat)
		53 (Floor Shift w/ Power Seat)
U1		47 (Column Shift)
		49 (Floor Shift)

: JUNCTION BLOCK AND WIRE HARNESS CONNECTOR

Code	See Page	Junction Block and Wire Harness (Connector Location)
1B	27	Cowl Wire and Driver Side J/B (Lower Finish Panel)
1D		
3C	34	Cowl Wire and J/B No.3 (Left Kick Panel)
3D		
3E	35	Floor No.1 Wire and J/B No.3 (Left Kick Panel)
4A	38	Cowl Wire and J/B No.4 (Right Kick Panel)
4B		
4D		
4F	39	Instrument Panel Wire and J/B No.4 (Right Kick Panel)

: CONNECTOR JOINING WIRE HARNESS AND WIRE HARNESS

Code	See Page	Joining Wire Harness and Wire Harness (Connector Location)
IA1	56 (Column Shift) 60 (Floor Shift)	Floor No.1 Wire and Instrument Panel Wire (Left Kick Panel)
ID1	56 (Column Shift) 60 (Floor Shift)	Floor No.1 Wire and Cowl Wire (Left Kick Panel)
IM2	58 (Column Shift) 62 (Floor Shift)	Floor No.2 Wire and Instrument Panel Wire (Right Kick Panel)
BC1	66 (Column Shift) 68 (Floor Shift)	Floor No.1 Wire and Seat No.1 Wire (Under the Driver's Seat)
BD1	66 (Column Shift) 68 (Floor Shift)	Floor No.2 Wire and Seat No.2 Wire (Under the Front Passenger's Seat)

: GROUND POINTS

Code	See Page	Ground Points Location
IF	56 (Column Shift) 60 (Floor Shift)	Left Kick Panel
IG	56 (Column Shift) 60 (Floor Shift)	Cowl Side Panel LH
II	56 (Column Shift) 60 (Floor Shift)	Right Kick Panel
BK	64	Rear Quarter Inner LH
BN	64	Rear Quater Inner RH

: SPLICE POINTS

Code	See Page	Wire Harness with Splice Points	Code	See Page	Wire Harness with Splice Points
I5	58 (Column Shift) 62 (Floor Shift)	Instrument Panel Wire	B15	66 (Column Shift) 68 (Floor Shift)	Seat No.2 Wire
B7	64	Floor No.2 Wire			

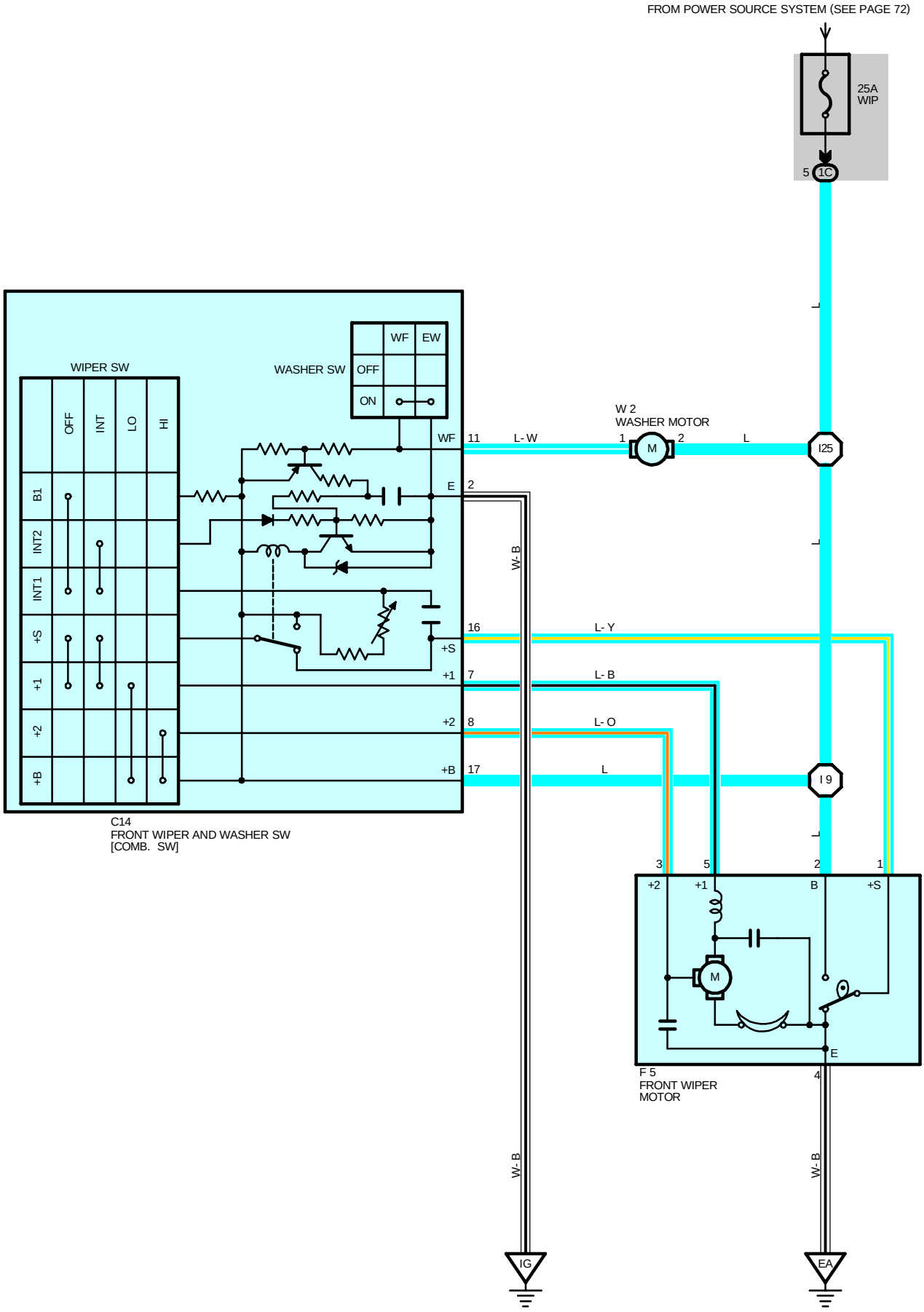
FROM POWER SOURCE SYSTEM (SEE PAGE 72)
25A
WIP
5
1C
L
WIPER SW
OFF
INT
LO
HI
B1
INT2
INT1
+S
+1
+2
+B
WASHER SW
WF
EW
OFF
ON
WF
E
+S
+1
+2
+B
11
L- W
2
16
L- Y
7
L- B
8
L- O
17
L
W 2
WASHER MOTOR
1
M
2
L
I25
I 9
W- B
W- B
C14
FRONT WIPER AND WASHER SW
[COMB. SW]
3
5
2
1
+2
+1
B
+S
M
E
F 5
FRONT WIPER
MOTOR
4
IG
EA

SYSTEM OUTLINE

When the ignition SW is turned ON, the current flows from WIP fuse to wiper and washer SW TERMINAL 17, washer motor TERMINAL 2, and front wiper motor TERMINAL 2.

1. LO POSITION

When the wiper and washer SW is at LO position, the current flows from wiper and washer SW TERMINAL 17 to TERMINAL 7 to front wiper motor TERMINAL 5 to TERMINAL 4 to GROUND, and the front wiper motor runs at low speed.

2. HI POSITION

When the wiper and washer SW is at HI position, the current flows from wiper and washer SW TERMINAL 17 to TERMINAL 8 to front wiper motor TERMINAL 3 to TERMINAL 4 to GROUND, and the front wiper motor runs at high speed.

3. INT POSITION

When the wiper and washer SW is at INT position, the wiper relay is activated and the current flows from wiper and washer SW TERMINAL 17 to TERMINAL 2 to GROUND. This current activates the intermittent circuit, and the current flows from wiper and washer SW TERMINAL 17 to TERMINAL 7 to front wiper motor TERMINAL 5 to TERMINAL 4 to GROUND, and operates the front wipers.

4. WASHER CONTINUOUS OPERATION

When the wiper and washer SW is pulled to WASHER position (Washer SW ON posiiton), the current from the WIP fuse flows to washer motor TERMINAL 2 to TERMINAL 1 to wiper and washer SW TERMINAL 11 to TERMINAL 2 to GROUND, and operates the washer motor to emitt a water spray. At the same time, the current flows from the WIP fuse to wiper and washer SW TERMINAL 17 to TERMINAL 7 to front wiper motor TERMINAL 5 to TERMINAL 4 to GROUND, and operates the front wiper motor.

SERVICE HINTS

C14 FRONT WIPER AND WASHER SW

2-GROUND : Always continuity
7-GROUND : Approx. **12** volts with the front wiper and washer SW at **LO** position
Approx. **2** to **12** seconds intermittently with the front wiper and washer SW at **INT** position
8-GROUND : Approx. **12** volts with the front wiper and washer SW at **HI** position
16-GROUND : Approx. **12** volts with the ignition SW on unless the front wiper motor at **STOP** position
17-GROUND : Approx. **12** volts the ignition SW at **ON** or **ST** position

F5 FRONT WIPER MOTOR

2-1 : Closed unless the wiper motor at **STOP** position

: PARTS LOCATION

Code	See Page	Code	See Page	Code	See Page
C14	46 (Column Shift)	F5	44		
	48 (Floor Shift)	W2	45		

: JUNCTION BLOCK AND WIRE HARNESS CONNECTOR

Code	See Page	Junction Block and Wire Harness (Connector Location)
1C	27	Cowl Wire and Driver Side J/B (Lower Finish Panel)

: GROUND POINTS

Code	See Page	Ground Points Location
EA	54	Front Side of Right Fender
IG	56 (Column Shift)	Cowl Side Panel LH
	60 (Floor Shift)	

: SPLICE POINTS

Code	See Page	Wire Harness with Splice Points	Code	See Page	Wire Harness with Splice Points
I9	58 (Column Shift)	Cowl Wire	I25	58 (Column Shift)	Cowl Wire
	62 (Floor Shift)			62 (Floor Shift)	

CIGARETTE LIGHTER

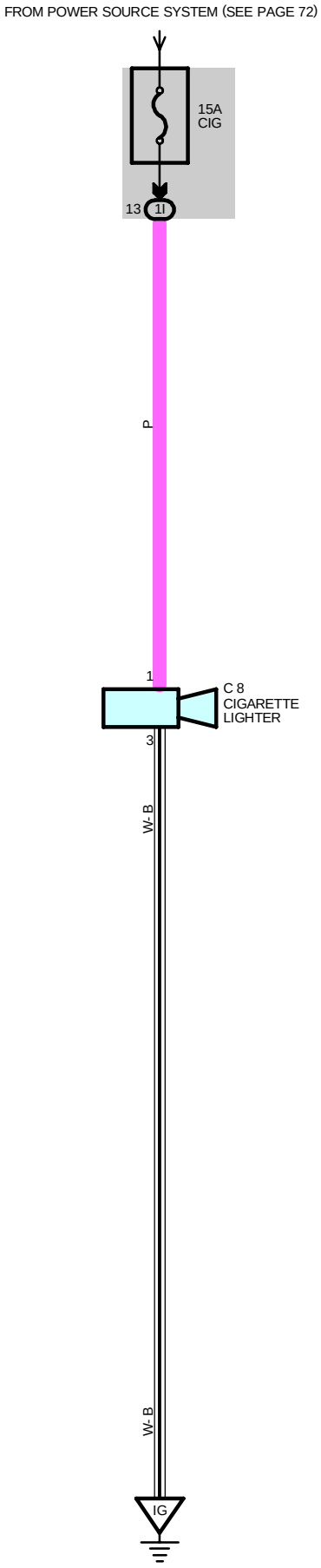

SERVICE HINTS

C8 CIGARETTE LIGHTER

1-GROUND : Approx. **12** volts with the ignition SW **ON** or **ACC** position
3-GROUND : Always continuity

: PARTS LOCATION

Code	See Page	Code	See Page	Code	See Page
C8	46 (Column Shift)	C8	48 (Floor Shift)		

: JUNCTION BLOCK AND WIRE HARNESS CONNECTOR

Code	See Page	Junction Block and Wire Harness (Connector Location)
1I	27	Cowl Wire and Driver Side J/B (Lower Finish Panel)

: GROUND POINTS

Code	See Page	Ground Points Location
IG	56 (Column Shift) 60 (Floor Shift)	Cowl Side Panel LH

POWER OUTLET

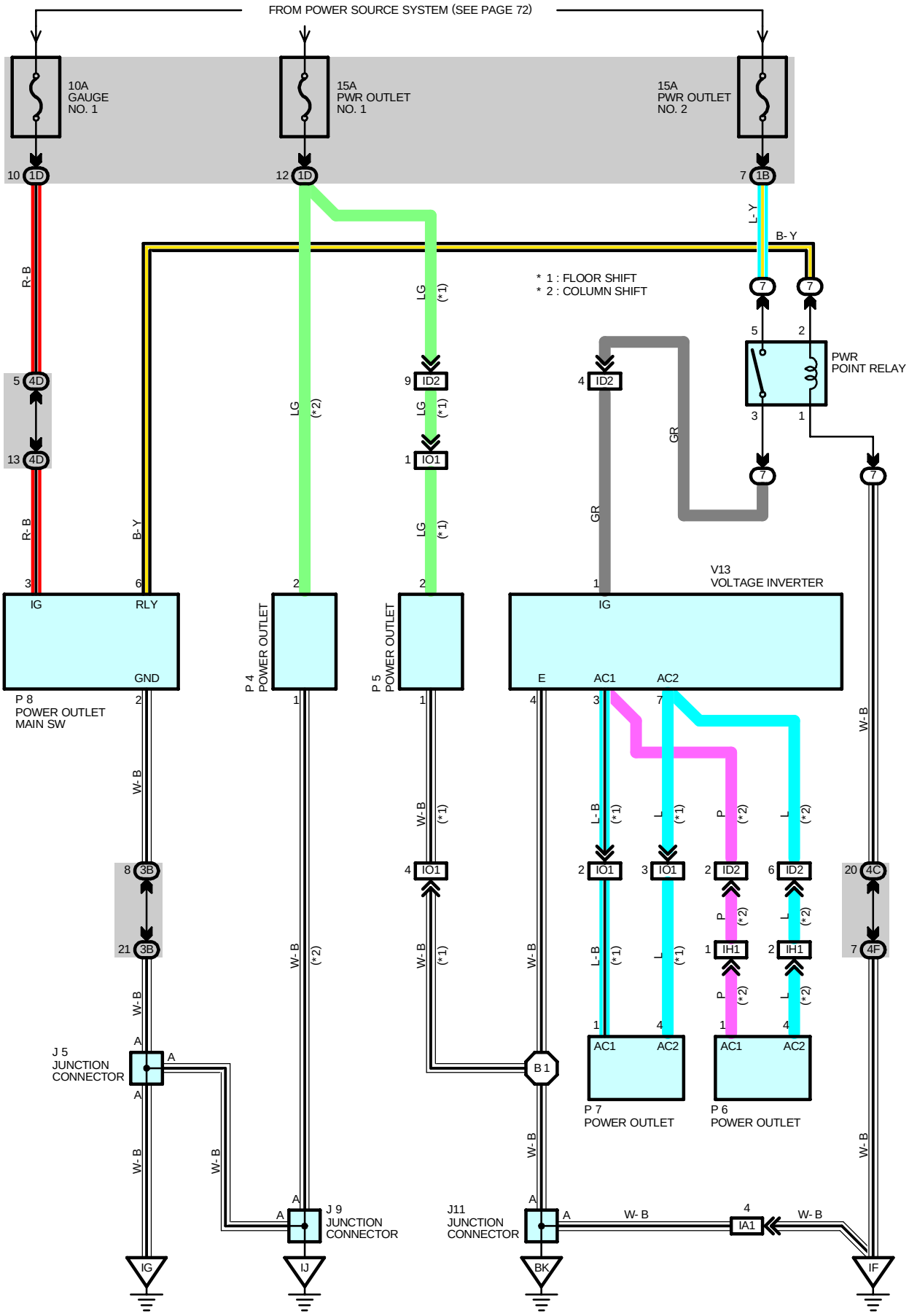

SERVICE HINTS

P8 POWER OUTLET MAIN SW

3-GROUND : Approx. **12** volts with the ignition SW at **ON** position
2-GROUND : Always continuity

P4, P5 POWER OUTLET

2-GROUND : Approx. **12** volts with the ignition SW **ON** or **ACC** position
1-GROUND : Always continuity

: PARTS LOCATION

Code	See Page	Code	See Page	Code	See Page
J5	47 (Column Shift)	J11	50	P7	49 (Floor Shift)
	49 (Floor Shift)	P4	47 (Column Shift)	P8	47 (Column Shift)
J9	47 (Column Shift)	P5	49 (Floor Shift)		49 (Floor Shift)
	49 (Floor Shift)	P6	47 (Column Shift)	V13	51

: RELAY BLOCKS

Code	See Page	Relay Blocks (Relay Block Location)
7	42	Front Passenger Side R/B No.7 (Right Kick Panel)

: JUNCTION BLOCK AND WIRE HARNESS CONNECTOR

Code	See Page	Junction Block and Wire Harness (Connector Location)
1B	27	Cowl Wire and Driver Side J/B (Lower Finish Panel)
1D		
3B	34	Cowl Wire and J/B No.3 (Left Kick Panel)
4C	38	Cowl Wire and J/B No.4 (Right Kick Panel)
4D		
4F	39	Instrument Panel Wire and J/B No.4 (Right Kick Panel)

: CONNECTOR JOINING WIRE HARNESS AND WIRE HARNESS

Code	See Page	Joining Wire Harness and Wire Harness (Connector Location)
IA1	56 (Column Shift)	Floor No.1 Wire and Instrument Panel Wire (Left Kick Panel)
	60 (Floor Shift)	
ID2	56 (Column Shift)	Floor No.1 Wire and Cowl Wire (Left Kick Panel)
	60 (Floor Shift)	
IH1	58 (Column Shift)	Cowl Wire and Cowl No.2 Wire (Behind the Center Cluster)
IO1	62 (Floor Shift)	Floor No.3 Wire and Floor No.1 Wire (Under the Console Box)

: GROUND POINTS

Code	See Page	Ground Points Location
IF	56 (Column Shift)	Left Kick Panel
	60 (Floor Shift)	
IG	56 (Column Shift)	Cowl Side Panel LH
	60 (Floor Shift)	
IJ	56 (Column Shift)	Cowl Side Panel RH
	60 (Floor Shift)	
BK	64	Rear Quarter Inner LH

: SPLICE POINTS

Code	See Page	Wire Harness with Splice Points	Code	See Page	Wire Harness with Splice Points
B1	64	Floor No.1 Wire			

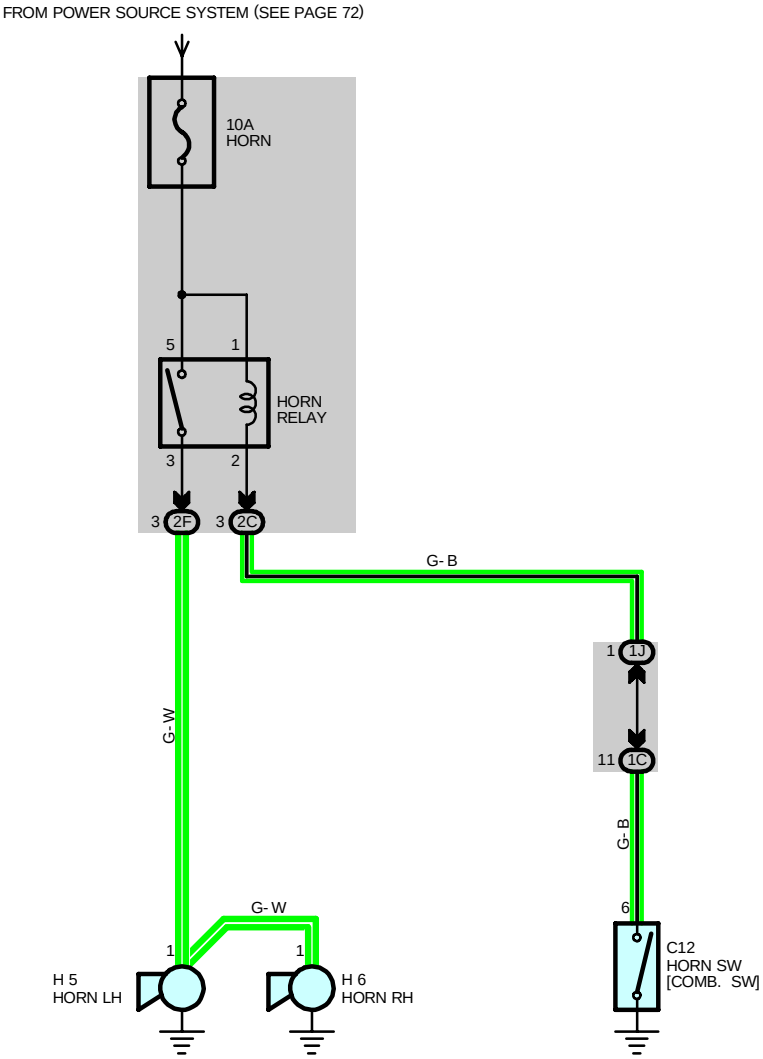
FROM POWER SOURCE SYSTEM (SEE PAGE 72)
10A
HORN
5
1
HORN
RELAY
3
2
3 2F
3 2C
G- B
1 1J
11 1C
G- W
G- B
G- W
6
1
1
H 5
HORN LH
H 6
HORN RH
C12
HORN SW
[COMB. SW]

SERVICE HINTS

HORN RELAY

5-3 : Closed with the horn SW on

: PARTS LOCATION

Code	See Page	Code	See Page	Code	See Page
C12	46 (Column Shift)	H5	44		
	48 (Floor Shift)	H6	44		

: JUNCTION BLOCK AND WIRE HARNESS CONNECTOR

Code	See Page	Junction Block and Wire Harness (Connector Location)
1C	27	Cowl Wire and Driver Side J/B (Lower Finish Panel)
1J	27	Engine Room Main Wire and Driver Side J/B (Lower Finish Panel)
2C	30	Engine Room Main Wire and Engine Room J/B (Engine Compartment Left)
2F		

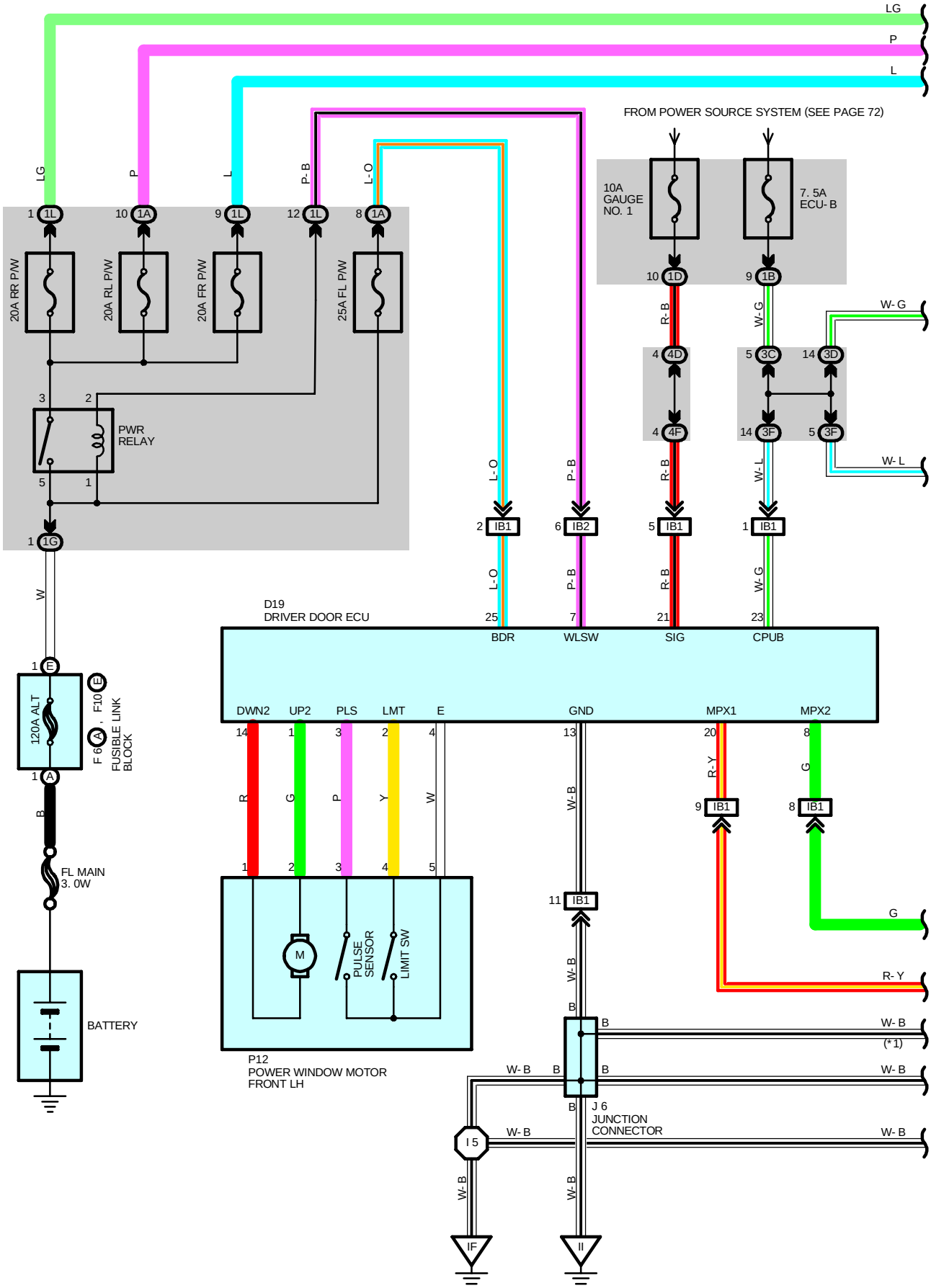
LG
P
L
FROM POWER SOURCE SYSTEM (SEE PAGE 72)
10A GAUGE NO. 1
7. 5A ECU- B
20A RR P/W
20A RL P/W
20A FR P/W
25A FL P/W
PWR RELAY
W- G
W- L
D19
DRIVER DOOR ECU
BDR
WLSW
SIG
CPUB
DWN2
UP2
PLS
LMT
E
GND
MPX1
MPX2
120A ALT
FUSIBLE LINK BLOCK
FL MAIN 3. 0W
BATTERY
PULSE SENSOR
LIMIT SW
P12
POWER WINDOW MOTOR FRONT LH
J 6
JUNCTION CONNECTOR
(*1)

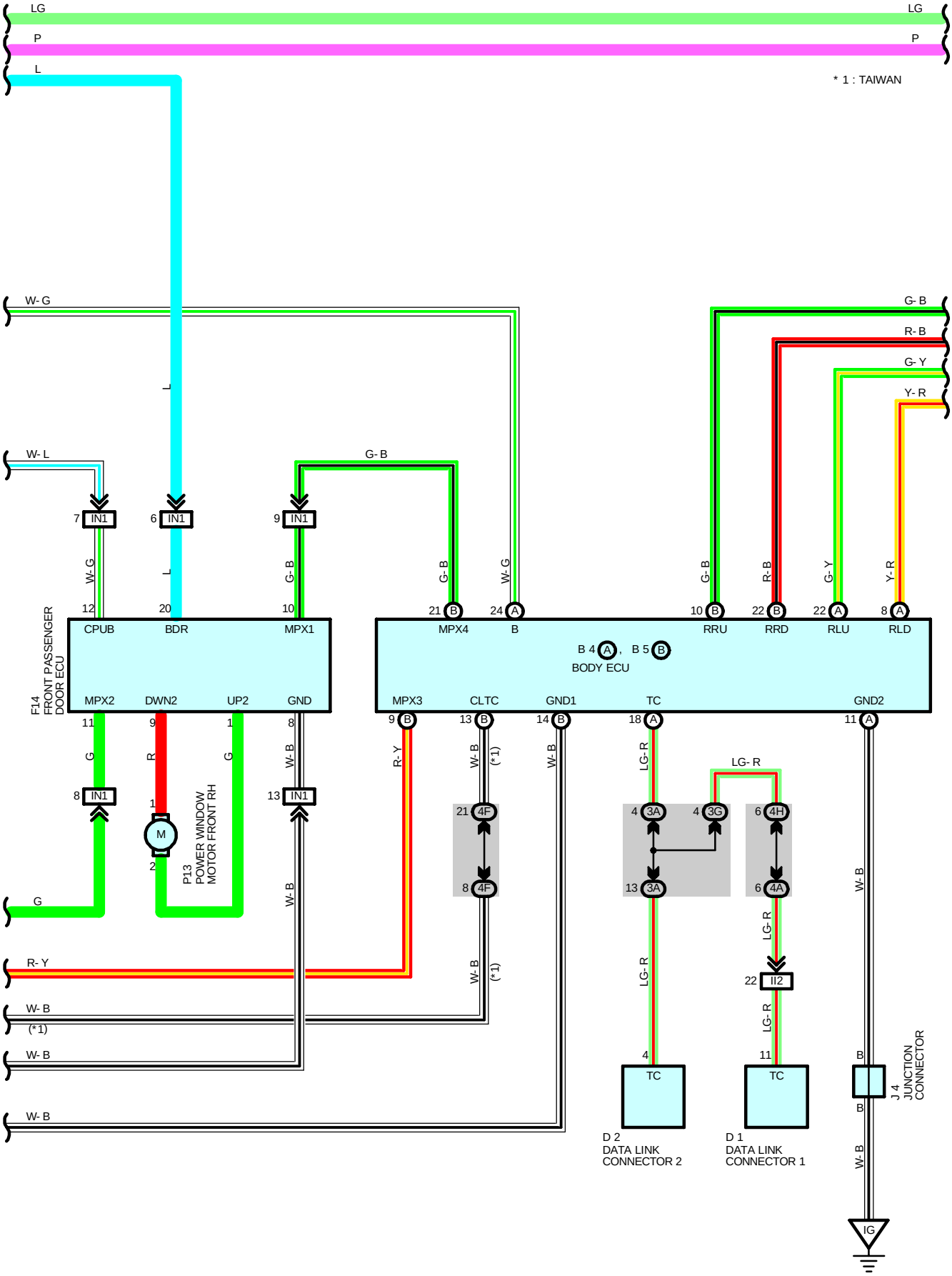
LG
LG
P
P
L
* 1 : TAIWAN
W- G
L
W- L
G- B
G- B
R- B
G- Y
Y- R
7 IN1
6 IN1
9 IN1
W- G
L
G- B
G- B
W- G
G- B
R- B
G- Y
Y- R
12
20
10
21 B
24 A
10 B
22 B
22 A
8 A
CPUB
BDR
MPX1
MPX4
B
RRU
RRD
RLU
RLD
F14
FRONT PASSENGER
DOOR ECU
B 4 A , B 5 B
BODY ECU
MPX2
DWN2
UP2
GND
MPX3
CLTC
GND1
TC
GND2
11
9
1
8
9 B
13 B
14 B
18 A
11 A
G
R
G
W- B
R- Y
W- B
(*1)
W- B
LG- R
LG- R
8 IN1
13 IN1
21 4F
4 3A
4 3G
6 4H
8 4F
13 3A
6 4A
M
1
2
P13
POWER WINDOW
MOTOR FRONT RH
G
W- B
R- Y
W- B
(*1)
W- B
(*1)
W- B
LG- R
LG- R
22 I12
LG- R
W- B
4
11
B
B
W- B
TC
TC
J 4
JUNCTION
CONNECTOR
D 2
DATA LINK
CONNECTOR 2
D 1
DATA LINK
CONNECTOR 1
IG

POWER WINDOW

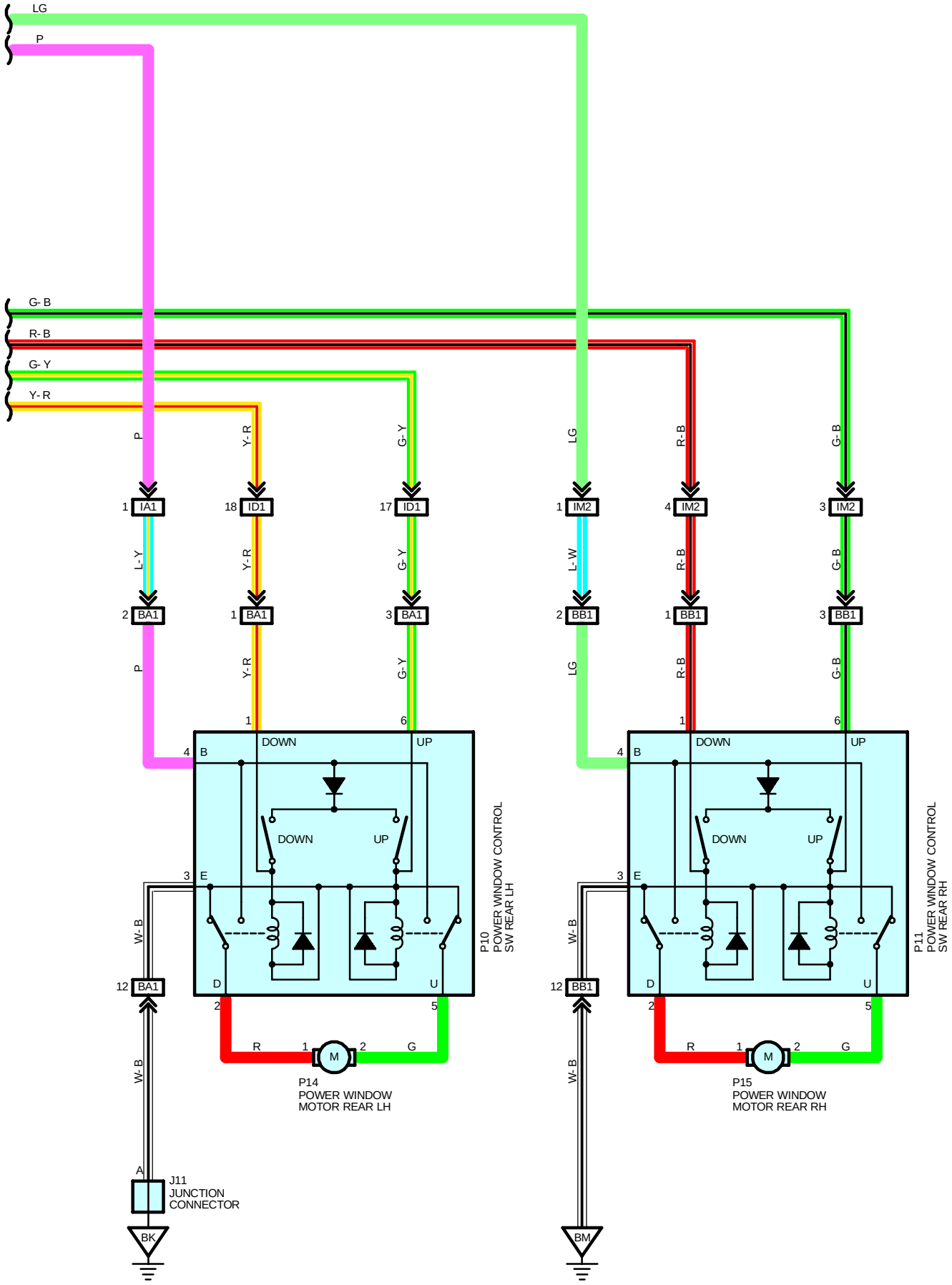

SYSTEM OUTLINE

1. MANUAL DOWN OR UP OPERATION

When the power window master SW (Driver's) is pushed one step, the motor rotates to open the window.
When the power window master SW (Driver's) is pulled up one step, the motor rotates in the opposite direction, to close the window.
All the other windows can be opened/closed as well, by the operation of the power window master SW or respective power window SW.

2. AUTO DOWN OR UP OPERATION

When the power window master SW (Driver's) is pushed two steps, the motor rotates to open the window automatically.
When the power window master SW (Driver's) is pulled up two steps, the motor rotates to close the window automatically.

3. JAM PROTECTION FUNCTION

When any foreign object gets caught during power window UP operation, the motor rotates in the opposite direction to open the window.

SERVICE HINTS

B4 (A), B5 (B) BODY ECU

(A)24-GROUND : Always approx. **12** volts
(A)11-GROUND : Always continuity
(B)14-GROUND : Always continuity

D19 DRIVER DOOR ECU

13-GROUND : Always continuity
21-GROUND : Approx. **12** volts with ignition SW at **ON** or **ST** position
23-GROUND : Always approx. **12** volts

F14 FRONT PASSENGER DOOR ECU

8-GROUND : Always continuity
12-GROUND : Always approx. **12** volts

: PARTS LOCATION

Code		See Page	Code		See Page	Code	See Page
B4	A	46 (Column Shift)	F6	A	44	P10	51
		48 (Floor Shift)	F10	E	44	P11	51
B5	B	46 (Column Shift)	F14		50	P12	51
		48 (Floor Shift)	J4		47 (Column Shift)	P13	51
D1		44			49 (Floor Shift)	P14	51
D2		46 (Column Shift)	J6		47 (Column Shift)	P15	51
		48 (Floor Shift)			49 (Floor Shift)		
D19		50	J11		50		

: JUNCTION BLOCK AND WIRE HARNESS CONNECTOR

Code	See Page	Junction Block and Wire Harness (Connector Location)
1A	26	Instrument Panel Wire and Driver Side J/B (Lower Finish Panel)
1B	27	Cowl Wire and Driver Side J/B (Lower Finish Panel)
1D		
1G	27	Engine Room Main Wire and Driver Side J/B (Lower Finish Panel)
1L	26	Instrument Panel Wire and Driver Side J/B (Lower Finish Panel)
3A	34	Cowl Wire and J/B No.3 (Left Kick Panel)
3C		
3D		
3F	35	Instrument Panel Wire and J/B No.3 (Left Kick Panel)
3G		
4A	38	Cowl Wire and J/B No.4 (Right Kick Panel)
4D		
4F	39	Instrument Panel Wire and J/B No.4 (Right Kick Panel)
4H		

POWER WINDOW

: CONNECTOR JOINING WIRE HARNESS AND WIRE HARNESS

Code	See Page	Joining Wire Harness and Wire Harness (Connector Location)
IA1	56 (Column Shift) 60 (Floor Shift)	Floor No.1 Wire and Instrument Panel Wire (Left Kick Panel)
IB1	56 (Column Shift) 60 (Floor Shift)	Front Door LH Wire and Instrument Panel Wire (Left Kick Panel)
IB2	56 (Column Shift) 60 (Floor Shift)	
ID1	56 (Column Shift) 60 (Floor Shift)	Floor No.1 Wire and Cowl Wire (Left Kick Panel)
II2	58 (Column Shift) 62 (Floor Shift)	Engine Wire and Cowl Wire (Behind the Glove Box)
IM2	58 (Column Shift) 62 (Floor Shift)	Floor No.2 Wire and Instrument Panel Wire (Right Kick Panel)
IN1	58 (Column Shift) 62 (Floor Shift)	Front Door RH Wire and Instrument Panel Wire (Right Kick Panel)
BA1	64	Rear Door No.2 Wire and Floor No.1 Wire (Under the Left Center Pillar)
BB1	64	Rear Door No.1 Wire and Floor No.2 Wire (Under the Right Center Pillar)

: GROUND POINTS

Code	See Page	Ground Points Location
IF	56 (Column Shift) 60 (Floor Shift)	Left Kick Panel
IG	56 (Column Shift) 60 (Floor Shift)	Cowl Side Panel LH
II	56 (Column Shift) 60 (Floor Shift)	Right Kick Panel
BK	64	Rear Quarter Inner LH
BM	64	Back Panel Center

: SPLICE POINTS

Code	See Page	Wire Harness with Splice Points	Code	See Page	Wire Harness with Splice Points
I5	58 (Column Shift)	Instrument Panel Wire	I5	62 (Floor Shift)	Instrument Panel Wire

DOOR LOCK CONTROL

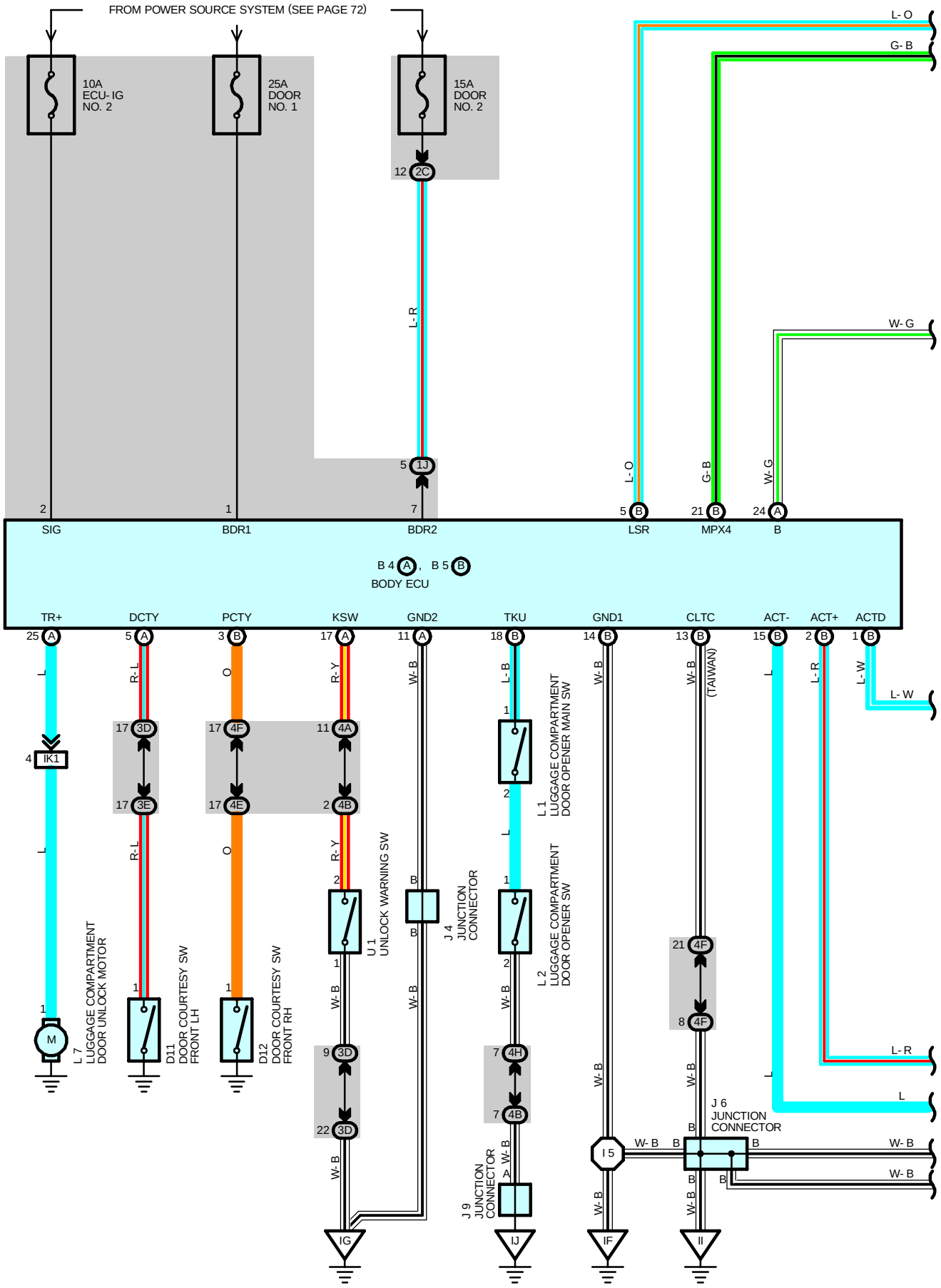

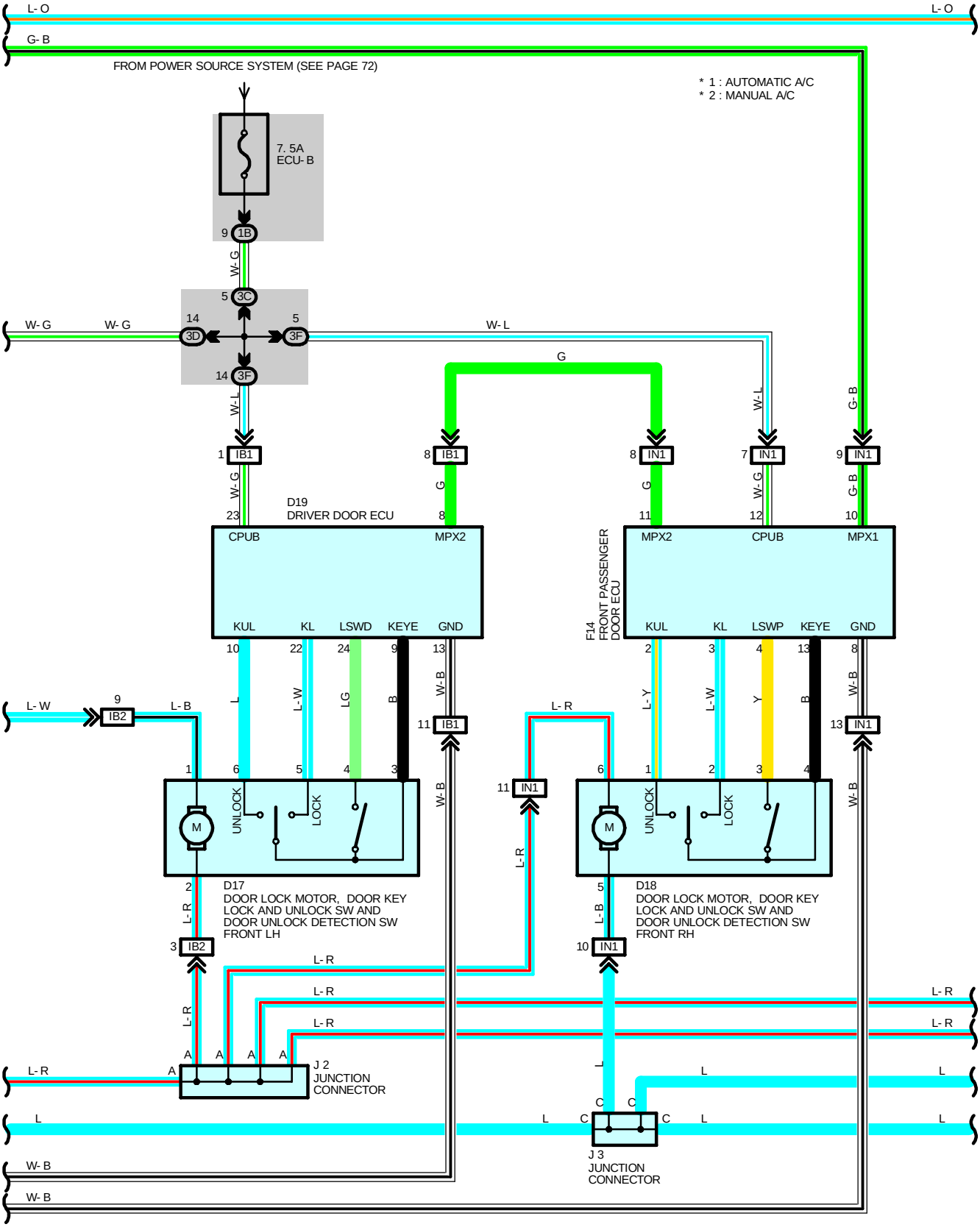
L- O
L- O
G- B
FROM POWER SOURCE SYSTEM (SEE PAGE 72)
* 1 : AUTOMATIC A/C
* 2 : MANUAL A/C
7. 5A
ECU- B
9 1B
W- G
5 3C
W- G
W- G
14 3D
5 3F
W- L
14 3F
W- L
G
W- L
G- B
1 IB1
8 IB1
8 IN1
7 IN1
9 IN1
W- G
G
G
W- G
G- B
D19
DRIVER DOOR ECU
23
8
11
12
10
CPUB
MPX2
MPX2
CPUB
MPX1
F14
FRONT PASSENGER
DOOR ECU
KUL
KL
LSWD
KEYE
GND
KUL
KL
LSWP
KEYE
GND
10
22
24
9
13
2
3
4
13
8
L
L- W
B
W- B
L- Y
L- W
Y
B
W- B
L- W
9
IB2
L- B
11 IB1
L- R
13 IN1
1
6
5
4
3
11 IN1
6
1
2
3
4
W- B
W- B
M
UNLOCK
LOCK
M
UNLOCK
LOCK
2
D17
DOOR LOCK MOTOR, DOOR KEY
LOCK AND UNLOCK SW AND
DOOR UNLOCK DETECTION SW
FRONT LH
L- R
5
D18
DOOR LOCK MOTOR, DOOR KEY
LOCK AND UNLOCK SW AND
DOOR UNLOCK DETECTION SW
FRONT RH
L- B
3 IB2
10 IN1
L- R
L- R
L- R
L- R
L- R
L- R
A
A
A
A
A
J 2
JUNCTION
CONNECTOR
L- R
L
L
L
L
C
C
C
C
L
L
L
L
J 3
JUNCTION
CONNECTOR
W- B
W- B

DOOR LOCK CONTROL

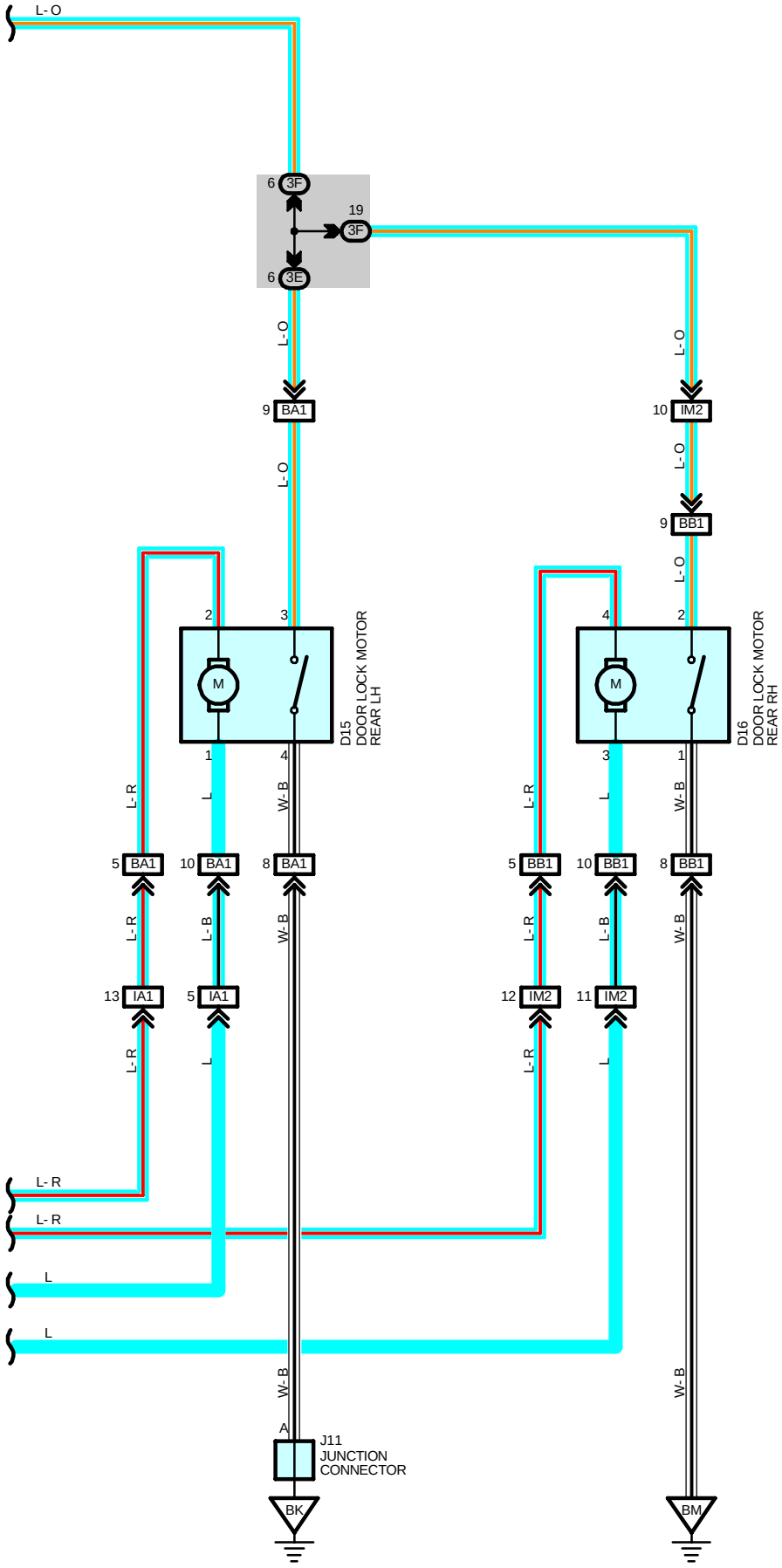

SYSTEM OUTLINE

1. MANUAL UNLOCK OPERATION

When the door lock control SW of the driver's or passenger's side door is pushed to UNLOCK, the door lock will unlock.

2. MANUAL LOCK OPERATION

When the door lock control SW of the driver's or passenger's side door is pushed to LOCK, the door lock will lock.

3. DOOR KEY UNLOCK OPERATION

∗ Unlock operation from driver's side door

When the driver's side door is unlocked once using the ignition key, only the driver's side door is unlocked. If this operation is repeated within 3 seconds, all the other doors are unlocked.

∗ Unlock operation from front passenger's side door

When the front passenger's side door is unlocked using the ignition key, all the other doors are unlocked, too.

SERVICE HINTS

B4 (A), B5 (B) BODY ECU

1-GROUND : Always approx. **12** volts
2-GROUND : Approx. **12** volts with ignition SW at **ON** or **ST** position
3-GROUND : Approx. **12** volts with ignition SW at **ACC** or **ON** position
7-GROUND : Always approx. **12** volts
(A)24-GROUND : Always approx. **12** volts
(A)11-GROUND : Always continuity
(B)14-GROUND : Always continuity

D19 DRIVER DOOR ECU

13-GROUND : Always continuity
23-GROUND : Always approx. **12** volts

F14 FRONT PASSENGER DOOR ECU

8-GROUND : Always continuity
12-GROUND : Always approx. **12** volts

○ : PARTS LOCATION

Code		See Page	Code	See Page	Code	See Page
B4	A	46 (Column Shift)	D19	50	J9	47 (Column Shift)
		48 (Floor Shift)	F14	50		49 (Floor Shift)
B5	B	46 (Column Shift)	J2	47 (Column Shift)	J11	50
		48 (Floor Shift)		49 (Floor Shift)	L1	47 (Column Shift)
D11		50	J3	47 (Column Shift)		49 (Floor Shift)
D12		50		49 (Floor Shift)	L2	47 (Column Shift)
D15		50	J4	47 (Column Shift)		49 (Floor Shift)
D16		50		49 (Floor Shift)	L7	50
D17		50	J6	47 (Column Shift)	U1	47 (Column Shift)
D18		50		49 (Floor Shift)		49 (Floor Shift)

DOOR LOCK CONTROL



: JUNCTION BLOCK AND WIRE HARNESS CONNECTOR

Code	See Page	Junction Block and Wire Harness (Connector Location)
1B	27	Cowl Wire and Driver Side J/B (Lower Finish Panel)
1J	27	Engine Room Main Wire and Driver Side J/B (Lower Finish Panel)
2C	30	Engine Room Main Wire and Engine Room J/B (Engine Compartment Left)
3C	34	Cowl Wire and J/B No.3 (Left Kick Panel)
3D		
3E	35	Floor No.1 Wire and J/B No.3 (Left Kick Panel)
3F	35	Instrument Panel Wire and J/B No.3 (Left Kick Panel)
4A	38	Cowl Wire and J/B No.4 (Right Kick Panel)
4B		
4E	39	Floor No.2 Wire and J/B No.4 (Right Kick Panel)
4F	39	Instrument Panel Wire and J/B No.4 (Right Kick Panel)
4H		



: CONNECTOR JOINING WIRE HARNESS AND WIRE HARNESS

Code	See Page	Joining Wire Harness and Wire Harness (Connector Location)
IA1	56 (Column Shift)	Floor No.1 Wire and Instrument Panel Wire (Left Kick Panel)
	60 (Floor Shift)	
IB1	56 (Column Shift)	Front Door LH Wire and Instrument Panel Wire (Left Kick Panel)
	60 (Floor Shift)	
IB2	56 (Column Shift)	
	60 (Floor Shift)	
IK1	58 (Column Shift)	Floor No.2 Wire and Cowl Wire (Right Kick Panel)
	62 (Floor Shift)	
IM2	58 (Column Shift)	Floor No.2 Wire and Instrument Panel Wire (Right Kick Panel)
	62 (Floor Shift)	
IN1	58 (Column Shift)	Front Door RH Wire and Instrument Panel Wire (Right Kick Panel)
	62 (Floor Shift)	
BA1	64	Rear Door No.2 Wire and Floor No.1 Wire (Under the Left Center Pillar)
BB1	64	Rear Door No.1 Wire and Floor No.2 Wire (Under the Right Center Pillar)



: GROUND POINTS

Code	See Page	Ground Points Location
IF	56 (Column Shift)	Left Kick Panel
	60 (Floor Shift)	
IG	56 (Column Shift)	Cowl Side Panel LH
	60 (Floor Shift)	
II	56 (Column Shift)	Right Kick Panel
	60 (Floor Shift)	
IJ	56 (Column Shift)	Cowl Side Panel RH
	60 (Floor Shift)	
BK	64	Rear Quarter Inner LH
BM	64	Back Panel Center



: SPLICE POINTS

Code	See Page	Wire Harness with Splice Points	Code	See Page	Wire Harness with Splice Points
I6	58 (Column Shift)	Cowl Wire	I6	62 (Floor Shift)	Cowl Wire

WIRELESS DOOR LOCK CONTROL

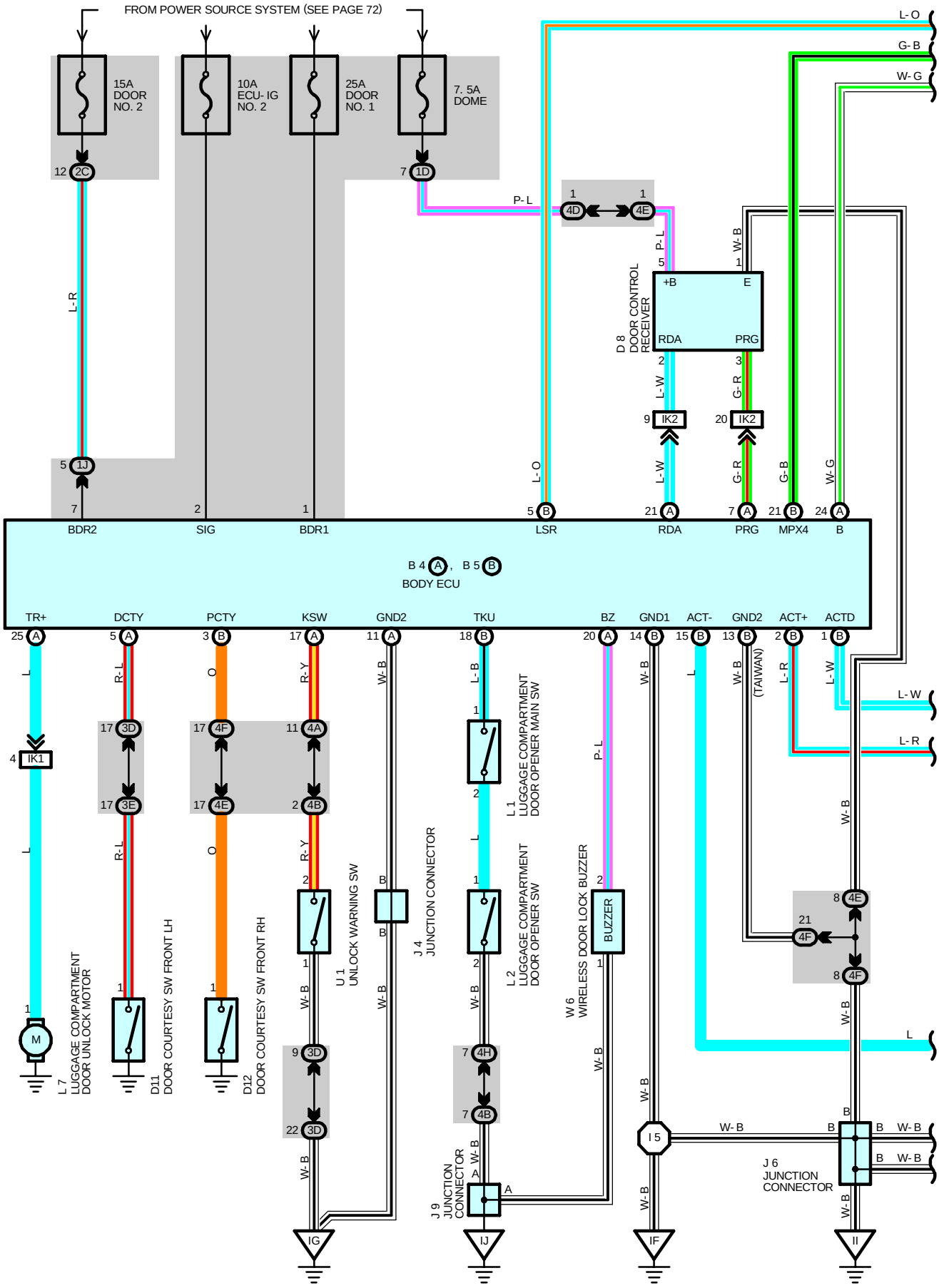

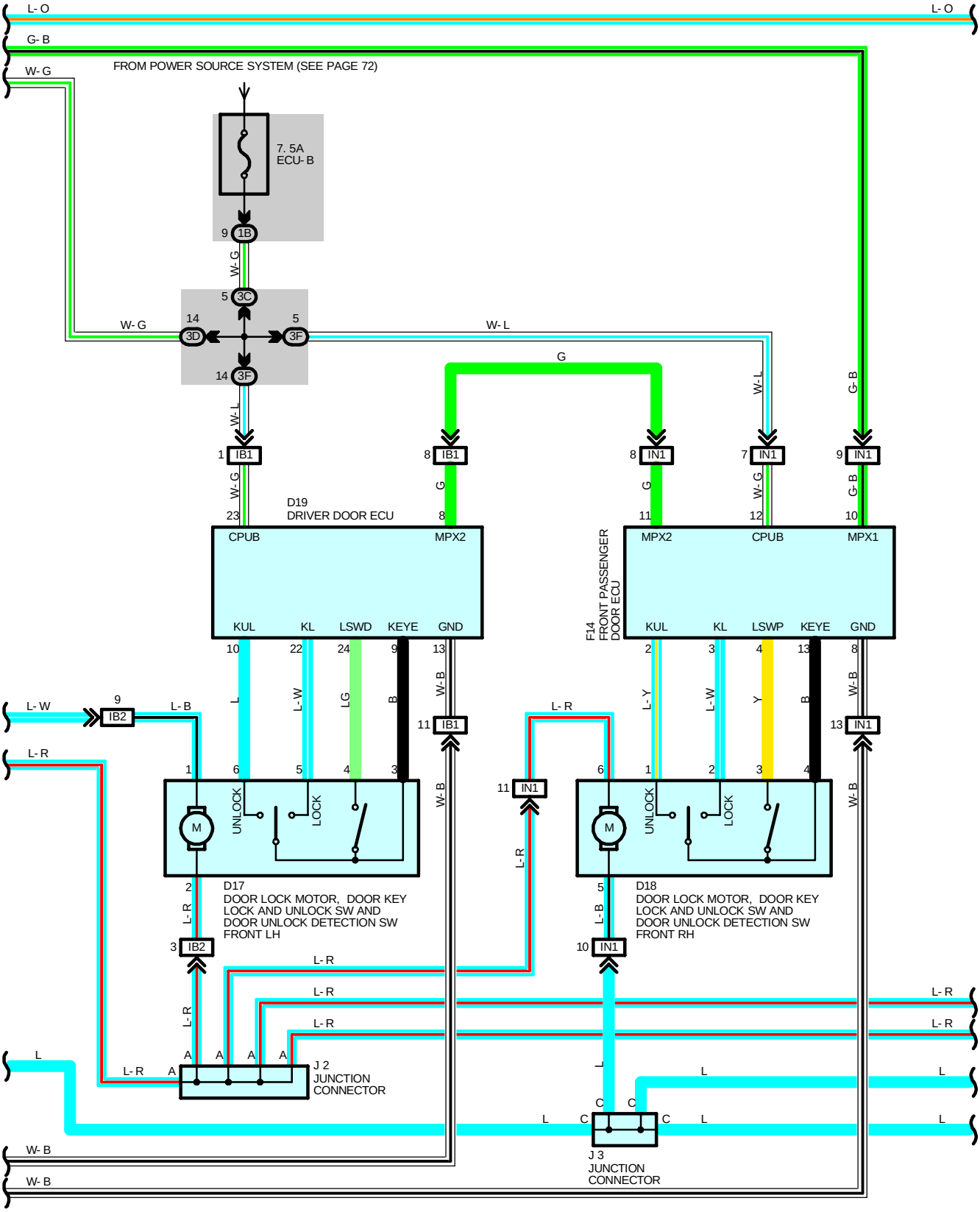
L- O
L- O
G- B
W- G
FROM POWER SOURCE SYSTEM (SEE PAGE 72)
7. 5A
ECU- B
9 1B
W- G
5 3C
14 3D
W- G
5 3F
W- L
14 3F
W- L
1 IB1
W- G
23
D19
DRIVER DOOR ECU
CPUB
MPX2
KUL
KL
LSWD
KEYE
GND
10
22
24
9
13
L
L- W
LG
B
W- B
8 IB1
G
8
G
8 IN1
G
11
F14
FRONT PASSENGER
DOOR ECU
MPX2
CPUB
MPX1
KUL
KL
LSWP
KEYE
GND
2
3
4
13
8
L- Y
L- W
Y
B
W- B
W- L
7 IN1
W- G
12
G- B
9 IN1
G- B
10
L- W
9 IB2
L- B
11 IB1
W- B
13 IN1
W- B
L- R
1
6
5
4
3
UNLOCK
LOCK
M
W- B
2
L- R
3 IB2
D17
DOOR LOCK MOTOR, DOOR KEY
LOCK AND UNLOCK SW AND
DOOR UNLOCK DETECTION SW
FRONT LH
L- R
11 IN1
L- R
6
1
2
3
4
UNLOCK
LOCK
M
W- B
5
L- B
10 IN1
D18
DOOR LOCK MOTOR, DOOR KEY
LOCK AND UNLOCK SW AND
DOOR UNLOCK DETECTION SW
FRONT RH
L- R
L- R
L- R
L- R
L- R
L- R
L
L- R
A
A
A
A
J 2
JUNCTION
CONNECTOR
L
L
L
L
C
C
L
C
C
L
L
J 3
JUNCTION
CONNECTOR
W- B
W- B

WIRELESS DOOR LOCK CONTROL

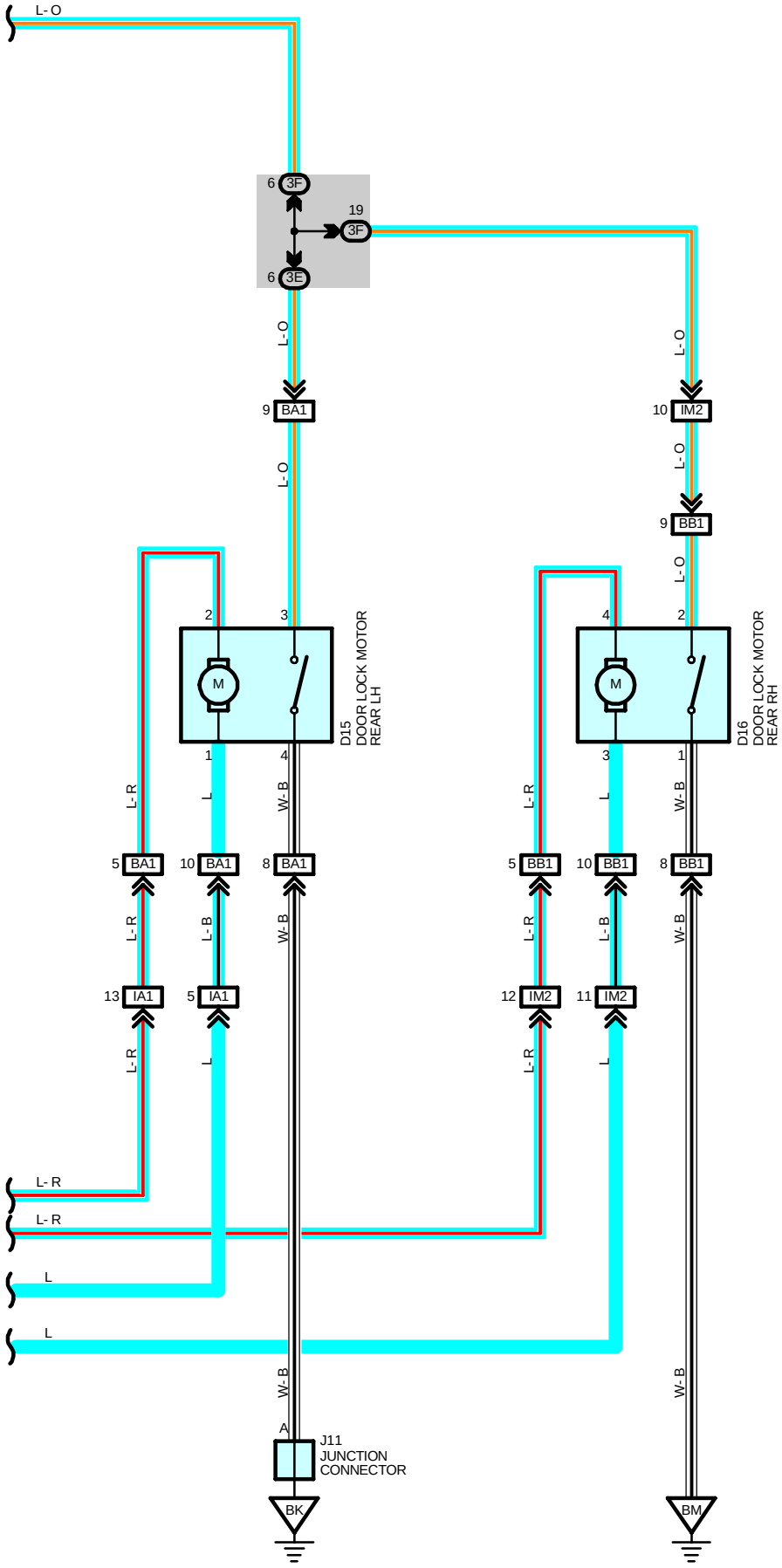

SYSTEM OUTLINE

In this system, the door control receiver receives the weak radio wave transmitted from the transmitter inside the ignition SW, and controls remotely the lock/unlock of all the doors and the luggage door, through the communication control of the body ECU.

1. NORMAL OPERATION

∗ Lock operation

When the lock SW of the transmitter is pushed, all the doors are locked. The answer back buzzer will beep once and the tail lamps will flash once synchronously.

∗ Unlock operation

When the unlock SW of the transmitter is pushed once, only the driver's side door is unlocked. The answer back buzzer will beep twice and the tail lamps will flash twice synchronously. When the unlock SW is pushed again within 3 seconds, all the doors are unlocked. After the unlock button is pressed the 2nd time, there will be 2 quick beeps (Answer back buzzer) and 2 quick flashes the tail lamps.

∗ Luggage door unlock operation

When the luggage door unlock SW is pushed for a second, the luggage door will open. The answer back buzzer will make a single, long beep.

2. AUTO LOCK FUNCTION

When the doors are unlocked by the transmitter, but are not actually opened within 30 seconds, all the doors will be locked again automatically.

3. PANIC MODE FUNCTION

When the panic SW of the transmitter is pushed, the horn comes on, and the headlight and taillight flashes.

4. REPEAT FUNCTION

In case an appropriate lock detection signal is not received after outputting a lock signal when pushing the lock button (Transmitter), the body ECU output the lock signal again.

SERVICE HINTS

B4 (A), B5 (B) BODY ECU

1-GROUND : Always approx. **12** volts
2-GROUND : Approx. **12** volts with ignition SW at **ON** or **ST** position
3-GROUND : Approx. **12** volts with ignition SW at **ACC** or **ON** position
7-GROUND : Always approx. **12** volts
(A)24-GROUND : Always approx. **12** volts
(A)11-GROUND : Always continuity
(B)14-GROUND : Always continuity

D19 DRIVER DOOR ECU

13-GROUND : Always continuity
23-GROUND : Always approx. **12** volts

F14 FRONT PASSENGER DOOR ECU

8-GROUND : Always continuity
12-GROUND : Always approx. **12** volts

○ : PARTS LOCATION

Code		See Page	Code	See Page	Code	See Page
B4	A	46 (Column Shift)	D19	50	J9	49 (Floor Shift)
		48 (Floor Shift)	F14	50	J11	50
B5	B	46 (Column Shift)	J2	47 (Column Shift)	L1	47 (Column Shift)
		48 (Floor Shift)		49 (Floor Shift)		49 (Floor Shift)
D8		50	J3	47 (Column Shift)	L2	47 (Column Shift)
D11		50		49 (Floor Shift)		49 (Floor Shift)
D12		50	J4	47 (Column Shift)	L7	50
D15		50		49 (Floor Shift)	U1	47 (Column Shift)
D16		50	J6	47 (Column Shift)		49 (Floor Shift)
D17		50		49 (Floor Shift)	W6	45
D18		50	J9	47 (Column Shift)		

WIRELESS DOOR LOCK CONTROL



: JUNCTION BLOCK AND WIRE HARNESS CONNECTOR

Code	See Page	Junction Block and Wire Harness (Connector Location)
1B	27	Cowl Wire and Driver Side J/B (Lower Finish Panel)
1D		
1J	27	Engine Room Main Wire and Driver Side J/B (Lower Finish Panel)
2C	30	Engine Room Main Wire and Engine Room J/B (Engine Compartment Left)
3C	34	Cowl Wire and J/B No.3 (Left Kick Panel)
3D		
3E	35	Floor No.1 Wire and J/B No.3 (Left Kick Panel)
3F	35	Instrument Panel Wire and J/B No.3 (Left Kick Panel)
4A	38	Cowl Wire and J/B No.4 (Right Kick Panel)
4B		
4D		
4E	39	Floor No.2 Wire and J/B No.4 (Right Kick Panel)
4F	39	Instrument Panel Wire and J/B No.4 (Right Kick Panel)
4H		



: CONNECTOR JOINING WIRE HARNESS AND WIRE HARNESS

Code	See Page	Joining Wire Harness and Wire Harness (Connector Location)
IA1	56 (Column Shift)	Floor No.1 Wire and Instrument Panel Wire (Left Kick Panel)
	60 (Floor Shift)	
IB1	56 (Column Shift)	Front Door LH Wire and Instrument Panel Wire (Left Kick Panel)
	60 (Floor Shift)	
IB2	56 (Column Shift)	
	60 (Floor Shift)	
IK1	58 (Column Shift)	Floor No.2 Wire and Cowl Wire (Right Kick Panel)
	62 (Floor Shift)	
IK2	58 (Column Shift)	
	62 (Floor Shift)	
IM2	58 (Column Shift)	Floor No.2 Wire and Instrument Panel Wire (Right Kick Panel)
	62 (Floor Shift)	
IN1	58 (Column Shift)	Front Door RH Wire and Instrument Panel Wire (Right Kick Panel)
	62 (Floor Shift)	
BA1	64	Rear Door No.2 Wire and Floor No.1 Wire (Under the Left Center Pillar)
BB1	64	Rear Door No.1 Wire and Floor No.2 Wire (Under the Right Center Pillar)



: GROUND POINTS

Code	See Page	Ground Points Location
IF	56 (Column Shift)	Left Kick Panel
	60 (Floor Shift)	
IG	56 (Column Shift)	Cowl Side Panel LH
	60 (Floor Shift)	
II	56 (Column Shift)	Right Kick Panel
	60 (Floor Shift)	
IJ	56 (Column Shift)	Cowl Side Panel RH
	60 (Floor Shift)	
BK	64	Rear Quarter Inner LH
BM	64	Back Panel Center



: SPLICE POINTS

Code	See Page	Wire Harness with Splice Points	Code	See Page	Wire Harness with Splice Points
I6	58 (Column Shift)	Cowl Wire	I6	62 (Floor Shift)	Cowl Wire

THEFT DETERRENT

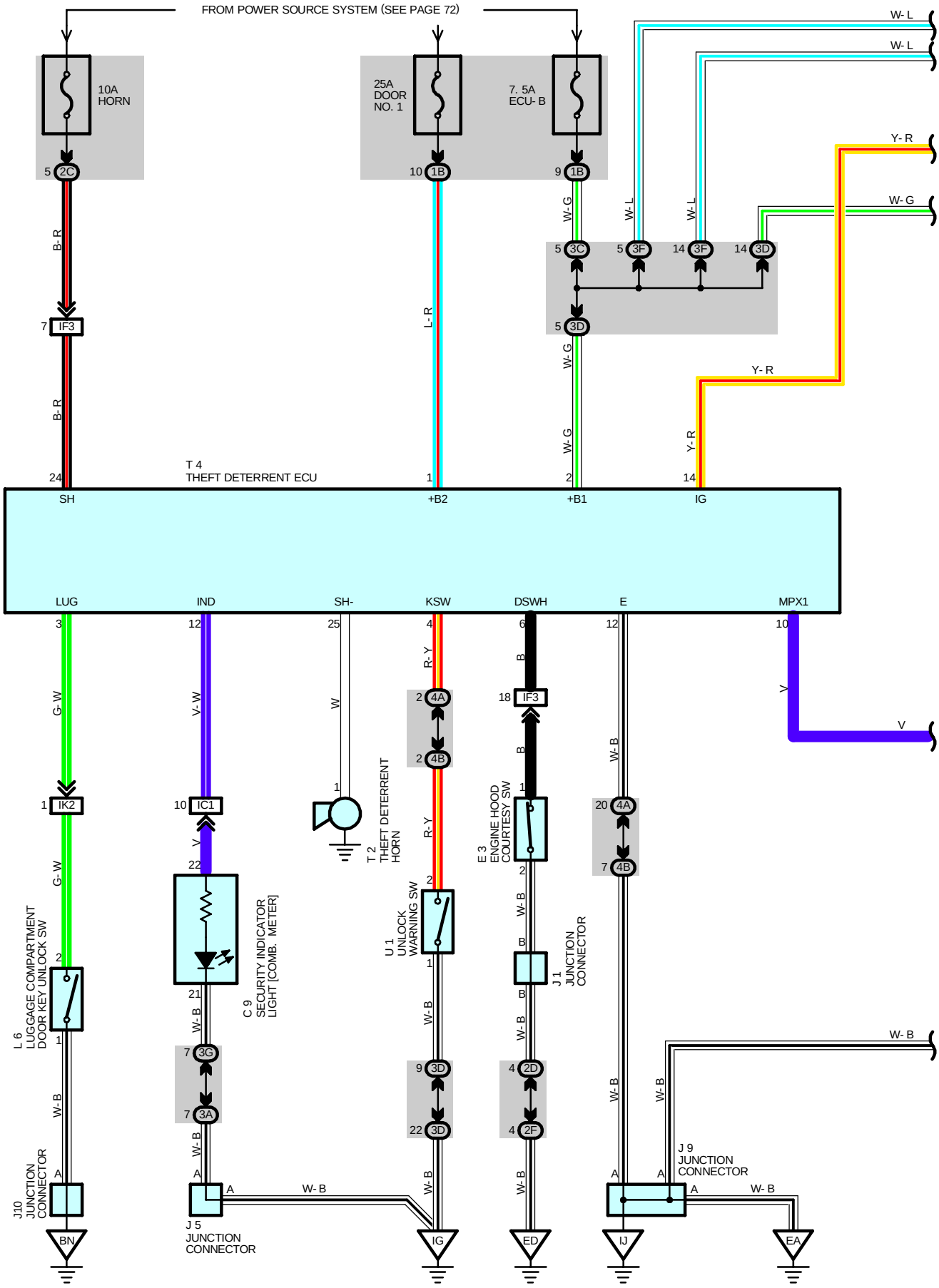

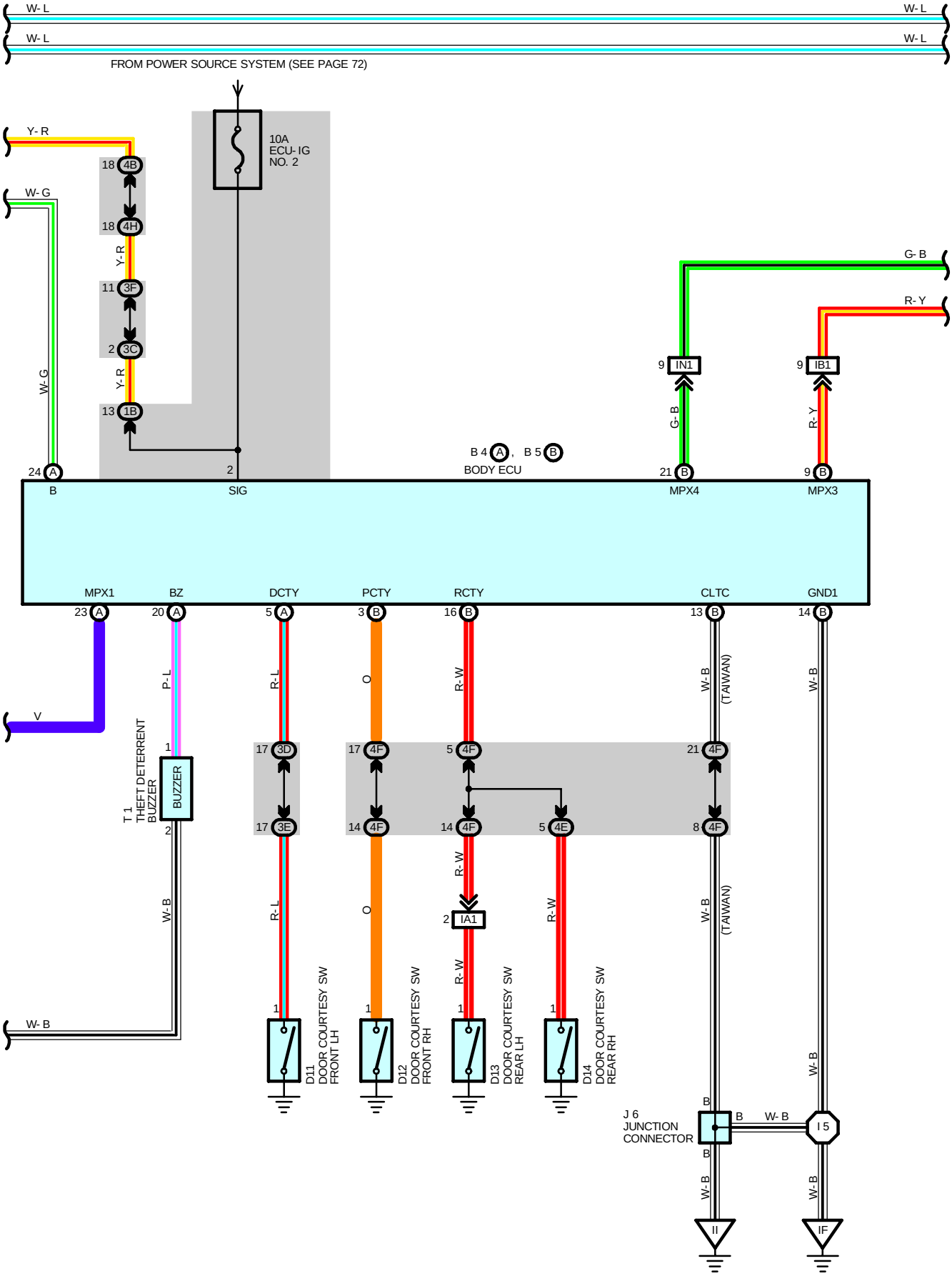
W- L
W- L
W- L
W- L
FROM POWER SOURCE SYSTEM (SEE PAGE 72)
10A
ECU- IG
NO. 2
Y- R
W- G
18 4B
18 4H
Y- R
11 3F
2 3C
Y- R
W- G
13 1B
24 A
B
2
SIG
B 4 A , B 5 B
BODY ECU
G- B
R- Y
9 IN1
9 IB1
G- B
R- Y
21 B
MPX4
9 B
MPX3
MPX1
BZ
DCTY
PCTY
RCTY
CLTC
GND1
23 A
20 A
5 A
3 B
16 B
13 B
14 B
V
P- L
R- L
O
R- W
W- B
(TAWAN)
W- B
1
T 1
THEFT DETERRENT
BUZZER
BUZZER
2
17 3D
17 3E
17 4F
14 4F
5 4F
14 4F
5 4E
21 4F
8 4F
W- B
R- L
O
R- W
2 IA1
R- W
R- W
(TAWAN)
W- B
1
D11
DOOR COURTESY SW
FRONT LH
1
D12
DOOR COURTESY SW
FRONT RH
1
D13
DOOR COURTESY SW
REAR LH
1
D14
DOOR COURTESY SW
REAR RH
J 6
JUNCTION
CONNECTOR
B
B
W- B
I 5
B
W- B
W- B
W- B
II
IF

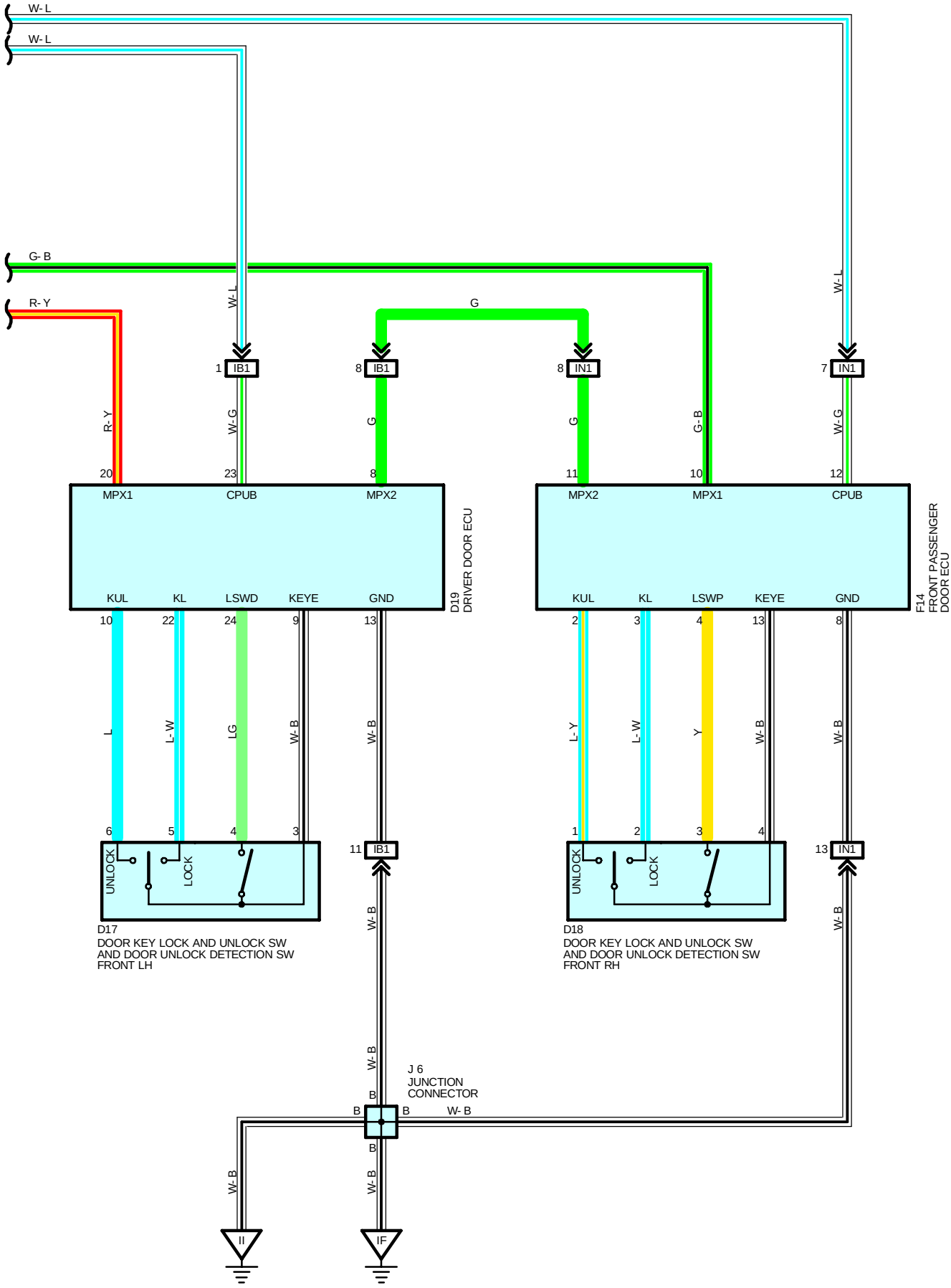
W- L
W- L
G- B
R- Y
W- L
G
W- L
1 IB1
8 IB1
8 IN1
7 IN1
R- Y
W- G
G
G
G- B
W- G
20
23
8
11
10
12
MPX1
CPUB
MPX2
MPX2
MPX1
CPUB
D19
DRIVER DOOR ECU
F14
FRONT PASSENGER
DOOR ECU
KUL
KL
LSWD
KEYE
GND
KUL
KL
LSWP
KEYE
GND
10
22
24
9
13
2
3
4
13
8
L
L- W
LG
W- B
W- B
L- Y
L- W
Y
W- B
W- B
6
5
4
3
1
2
3
4
UNLOCK
LOCK
UNLOCK
LOCK
11 IB1
13 IN1
W- B
W- B
D17
DOOR KEY LOCK AND UNLOCK SW
AND DOOR UNLOCK DETECTION SW
FRONT LH
D18
DOOR KEY LOCK AND UNLOCK SW
AND DOOR UNLOCK DETECTION SW
FRONT RH
W- B
J 6
JUNCTION
CONNECTOR
B
B
B
W- B
B
W- B
W- B
II
IF

SERVICE HINTS

D11, D12, D13, D14 DOOR COURTESY SW FRONT LH, RH REAR LH, RH

1-GROUND : Closed with the door open

D17 DOOR KEY LOCK AND UNLOCK SW FRONT LH

5-3 : Closed with the door lock cylinder locked with the key
6-3 : Closed with the door lock cylinder unlocked with the key

D18 DOOR KEY LOCK AND UNLOCK SW FRONT RH

2-4 : Closed with the door lock cylinder locked with the key
1-4 : Closed with the door lock cylinder unlocked with the key

E3 ENGINE HOOD COURTESY SW

1-2 : Open with the engine hood open

L6 LUGGAGE COMPARTMENT DOOR KEY UNLOCK SW

2-1 : Closed with the door lock cylinder unlocked with the key

T4 THEFT DETERRENT ECU

3-GROUND : Continuity with the luggage compartment door to **UNLOCK** position
6-GROUND : Continuity with the engine hood close
1, 2, 24-GROUND : Always approx. **12** volts
12-GROUND : Always continuity
14-GROUND : Approx. **12** volts with the ignition SW at **ON** position

B4 (A), B5 (B) BODY ECU

2-GROUND : Approx. **12** volts with the ignition SW at **ON** position
(A)24-GROUND : Always approx. **12** volts
(A) 5-GROUND : Continuity with the front door LH open
(B) 3-GROUND : Continuity with the front door RH open
(B)16-GROUND : Continuity with the rear door LH, RH open
(B)14-GROUND : Always continuity

○ : PARTS LOCATION

Code		See Page	Code	See Page	Code	See Page
B4	A	46 (Column Shift)	D18	50	J9	49 (Floor Shift)
		48 (Floor Shift)	D19	50	J10	50
B5	B	46 (Column Shift)	E3	44	L6	50
		48 (Floor Shift)	F14	50	T1	45
C9		46 (Column Shift)	J1	47 (Column Shift)	T2	45
		48 (Floor Shift)		49 (Floor Shift)	T4	47 (Column Shift)
D11		50	J5	47 (Column Shift)		49 (Floor Shift)
D12		50		49 (Floor Shift)	U1	47 (Column Shift)
D13		50	J6	47 (Column Shift)		49 (Floor Shift)
D14		50		49 (Floor Shift)		
D17		50	J9	47 (Column Shift)		



: JUNCTION BLOCK AND WIRE HARNESS CONNECTOR

Code	See Page	Junction Block and Wire Harness (Connector Location)
1B	27	Cowl Wire and Driver Side J/B (Lower Finish Panel)
2C	30	Engine Room Main Wire and Engine Room J/B (Engine Compartment Left)
2D		
2F		
3A	34	Cowl Wire and J/B No.3 (Left Kick Panel)
3C		
3D		
3E	35	Floor No.1 Wire and J/B No.3 (Left Kick Panel)
3F	35	Instrument Panel Wire and J/B No.3 (Left Kick Panel)
3G		
4A	38	Cowl Wire and J/B No.4 (Right Kick Panel)
4B		
4E	39	Floor No.2 Wire and J/B No.4 (Right Kick Panel)
4F	39	Instrument Panel Wire and J/B No.4 (Right Kick Panel)
4H		



: CONNECTOR JOINING WIRE HARNESS AND WIRE HARNESS

Code	See Page	Joining Wire Harness and Wire Harness (Connector Location)
IA1	56 (Column Shift)	Floor No.1 Wire and Instrument Panel Wire (Left Kick Panel)
	60 (Floor Shift)	
IB1	56 (Column Shift)	Front Door LH Wire and Instrument Panel Wire (Left Kick Panel)
	60 (Floor Shift)	
IC1	56 (Column Shift)	Cowl Wire and Instrument Panel Wire (Left Kick Panel)
	60 (Floor Shift)	
IF3	56 (Column Shift)	Engine Room Main Wire and Cowl Wire (Left Side of Instrument Panel)
	60 (Floor Shift)	
IK2	58 (Column Shift)	Floor No.2 Wire and Cowl Wire (Right Kick Panel)
	62 (Floor Shift)	
IN1	58 (Column Shift)	Front Door RH Wire and Instrument Panel Wire (Right Kick Panel)
	62 (Floor Shift)	



: GROUND POINTS

Code	See Page	Ground Points Location
EA	54	Front Side of Right Fender
ED	54	Front Side of Left Fender
IF	56 (Column Shift)	Left Kick Panel
	60 (Floor Shift)	
IG	56 (Column Shift)	Cowl Side Panel LH
	60 (Floor Shift)	
II	56 (Column Shift)	Right Kick Panel
	60 (Floor Shift)	
IJ	56 (Column Shift)	Cowl Side Panel RH
	60 (Floor Shift)	
BN	64	Rear Quarter Inner RH



: SPLICE POINTS

Code	See Page	Wire Harness with Splice Points	Code	See Page	Wire Harness with Splice Points
I5	58 (Column Shift)	Instrument Panel Wire	I5	62 (Floor Shift)	Instrument Panel Wire

VSC (w/ TRACTION CONTROL)

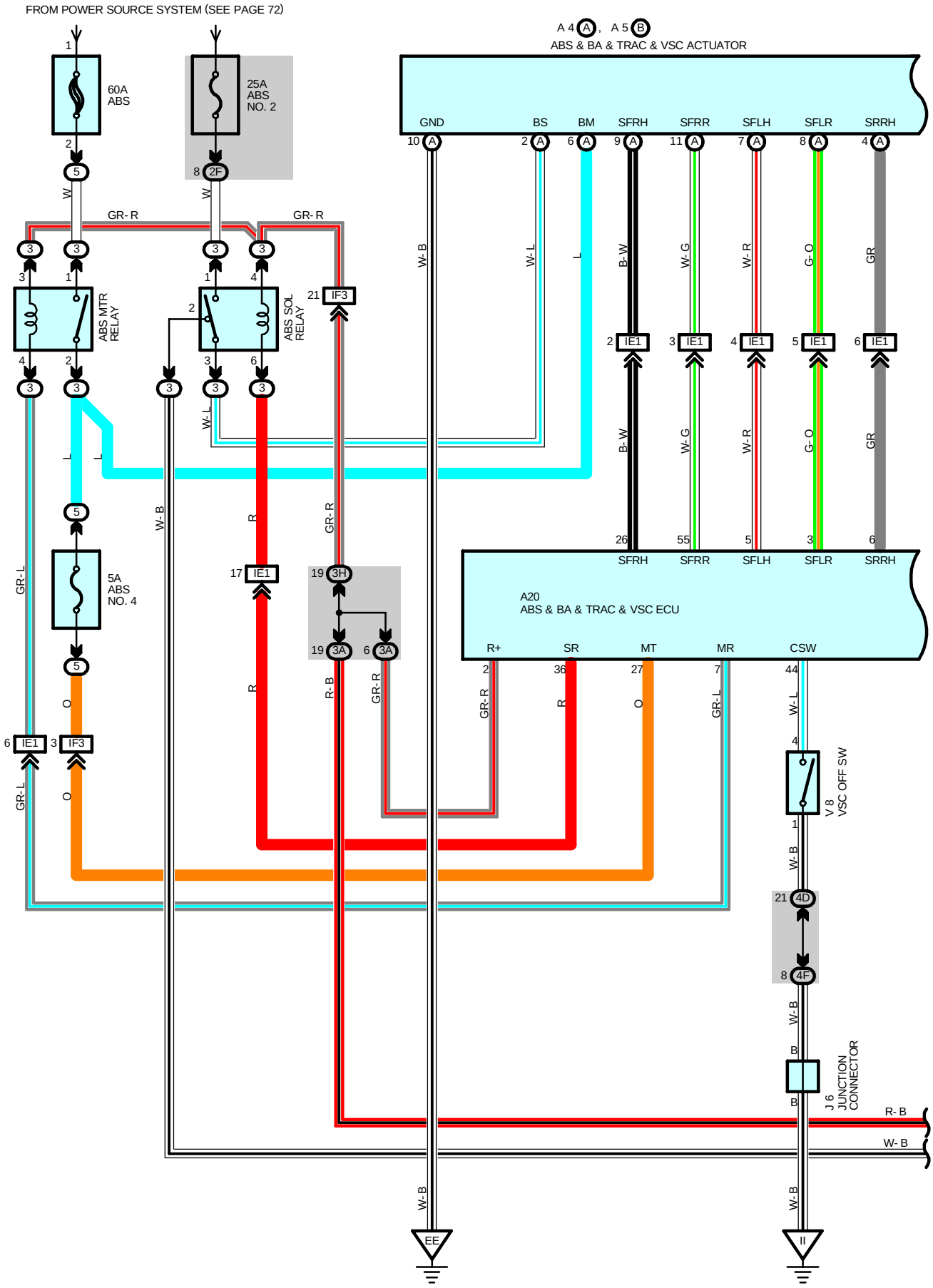

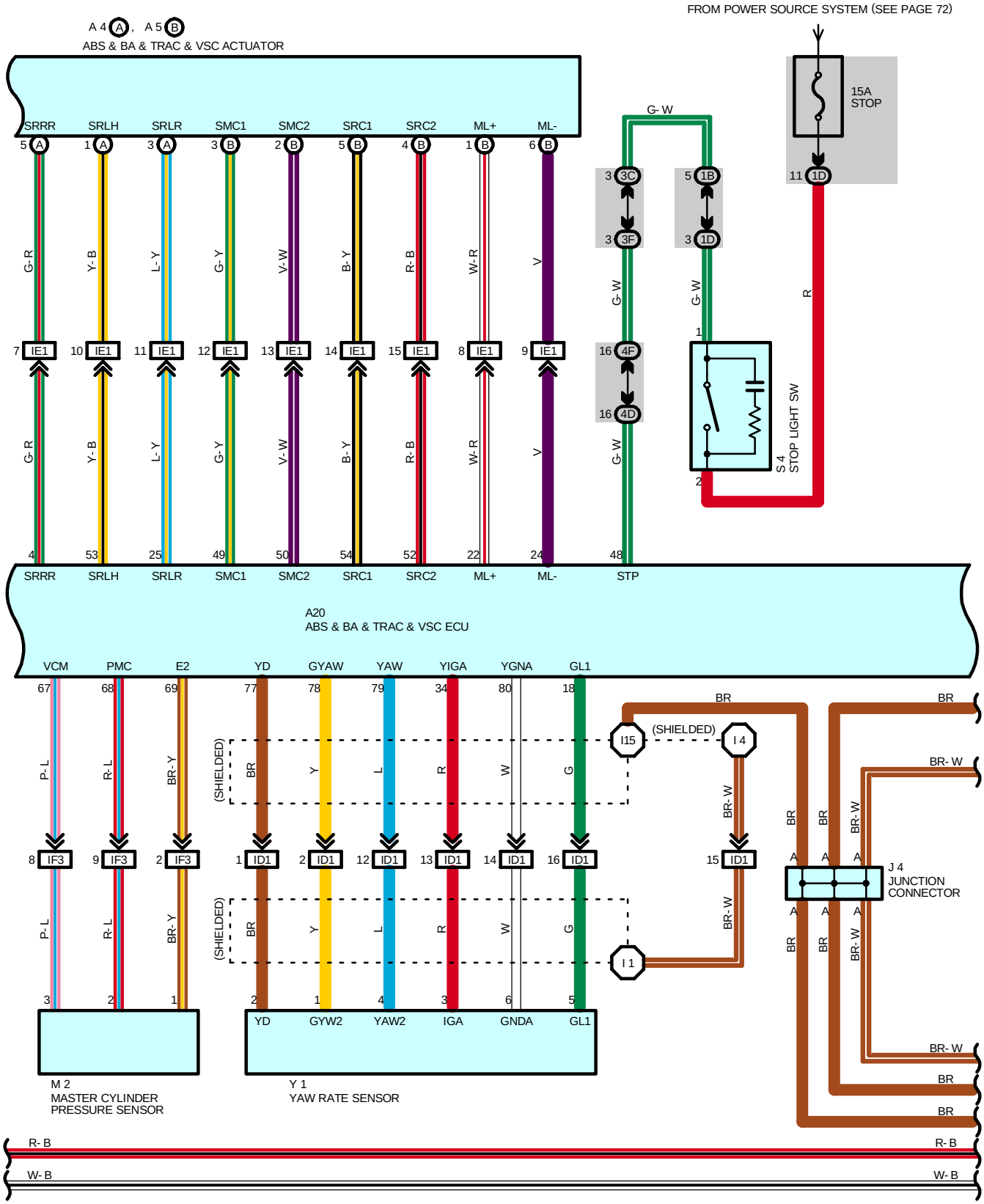
FROM POWER SOURCE SYSTEM (SEE PAGE 72)
A 4 A , A 5 B
ABS & BA & TRAC & VSC ACTUATOR
SRRR SRLH SRLR SMC1 SMC2 SRC1 SRC2 ML+ ML-
15A STOP
G- W
S 4 STOP LIGHT SW
STP
A20
ABS & BA & TRAC & VSC ECU
VCM PMC E2 YD GYAW YAW YIGA YGNA GL1
(SHIELDED)
J 4 JUNCTION CONNECTOR
M 2 MASTER CYLINDER PRESSURE SENSOR
Y 1 YAW RATE SENSOR
YD GYW2 YAW2 IGA GNDA GL1
R- B
W- B

VSC (w/ TRACTION CONTROL)

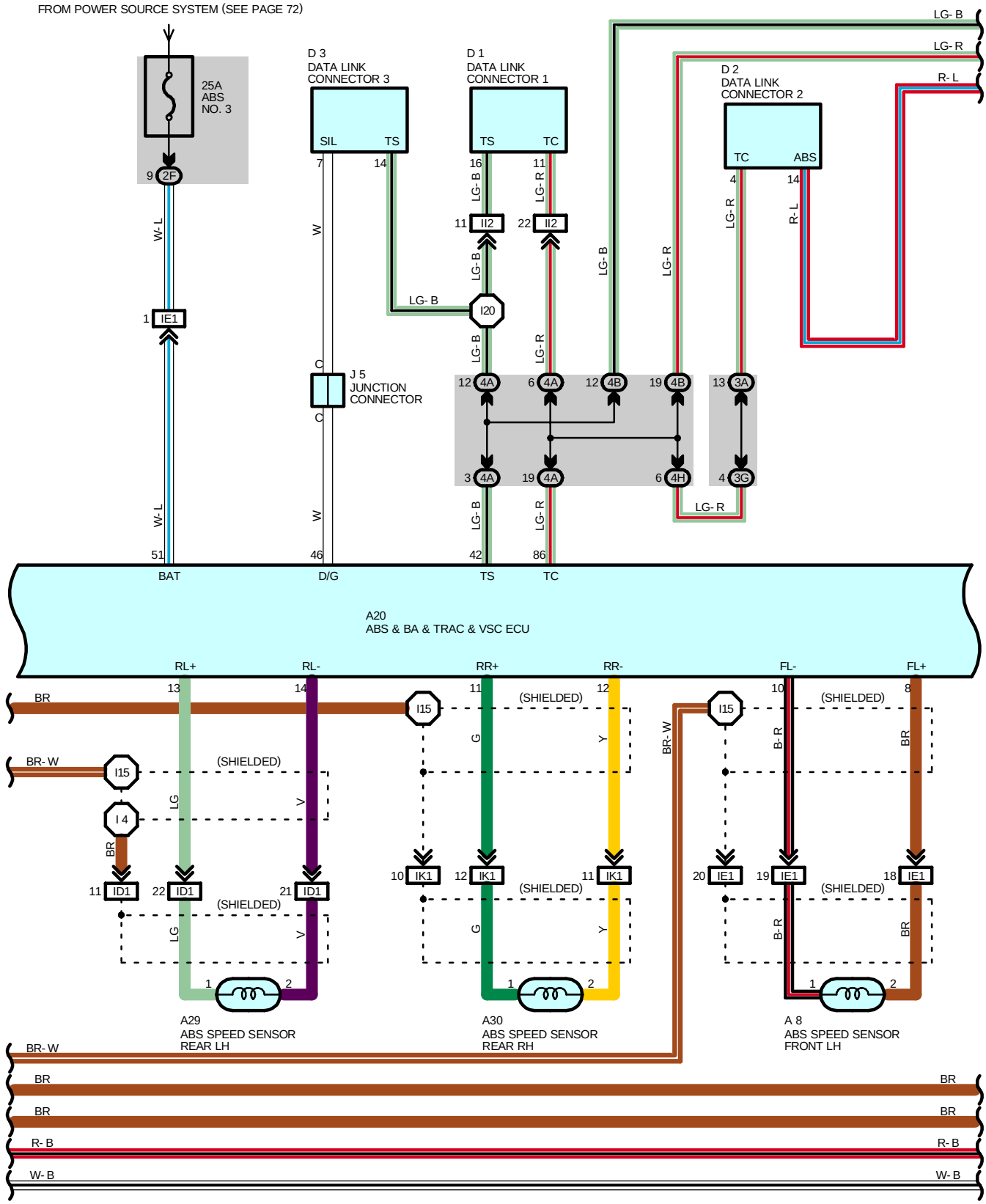

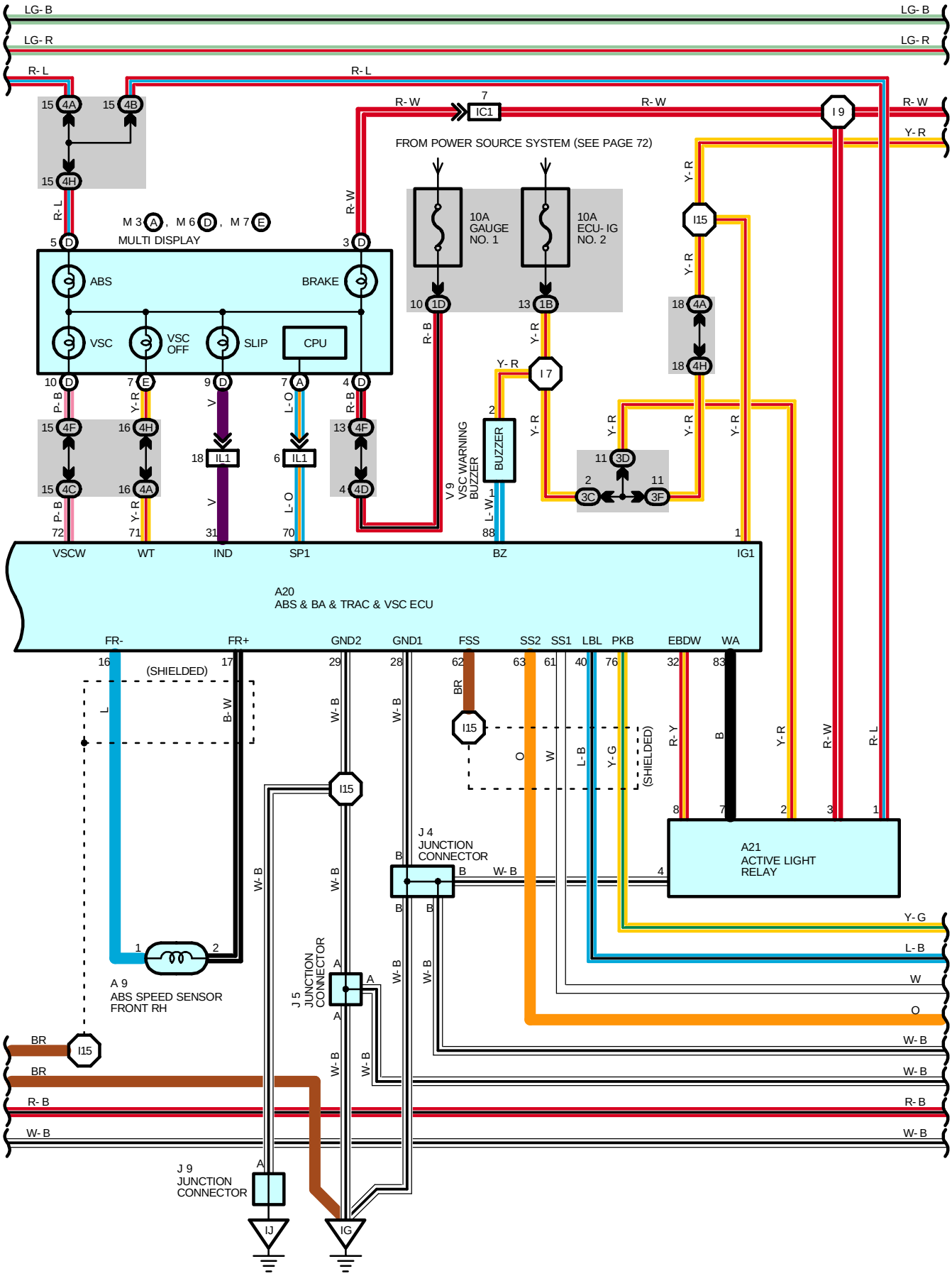
LG- B
LG- R
R- L
FROM POWER SOURCE SYSTEM (SEE PAGE 72)
10A GAUGE NO. 1
10A ECU- IG NO. 2
M 3 A , M 6 D , M 7 E
MULTI DISPLAY
ABS
BRAKE
VSC
VSC OFF
SLIP
CPU
VSC WARNING BUZZER
BUZZER
A20
ABS & BA & TRAC & VSC ECU
VSCW
WT
IND
SP1
BZ
IG1
FR-
FR+
GND2
GND1
FSS
SS2
SS1
LBL
PKB
EBDW
WA
(SHIELDED)
A 9
ABS SPEED SENSOR FRONT RH
J 4
JUNCTION CONNECTOR
J 5
JUNCTION CONNECTOR
J 9
JUNCTION CONNECTOR
A21
ACTIVE LIGHT RELAY
IJ
IG

VSC (w/ TRACTION CONTROL)

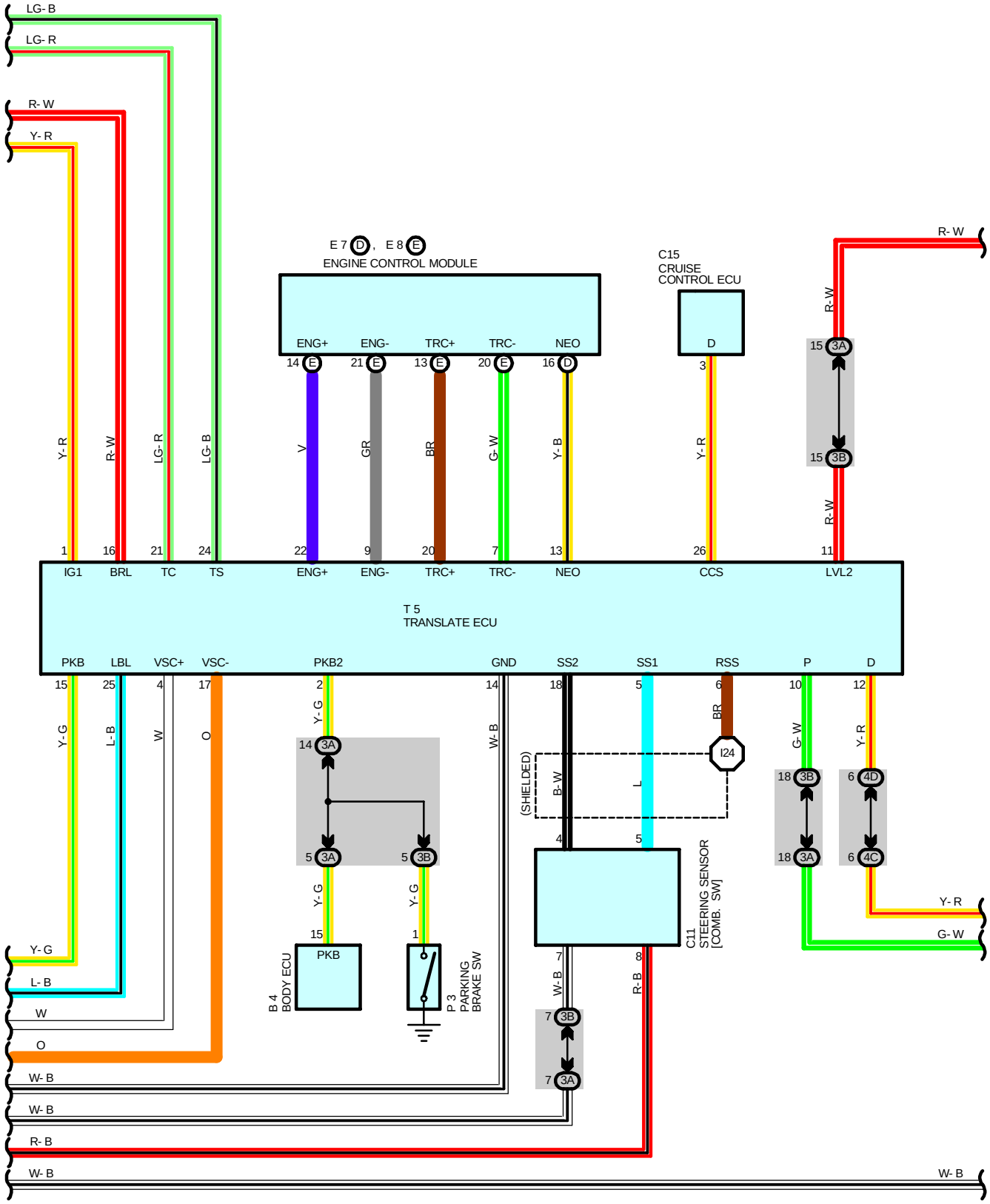

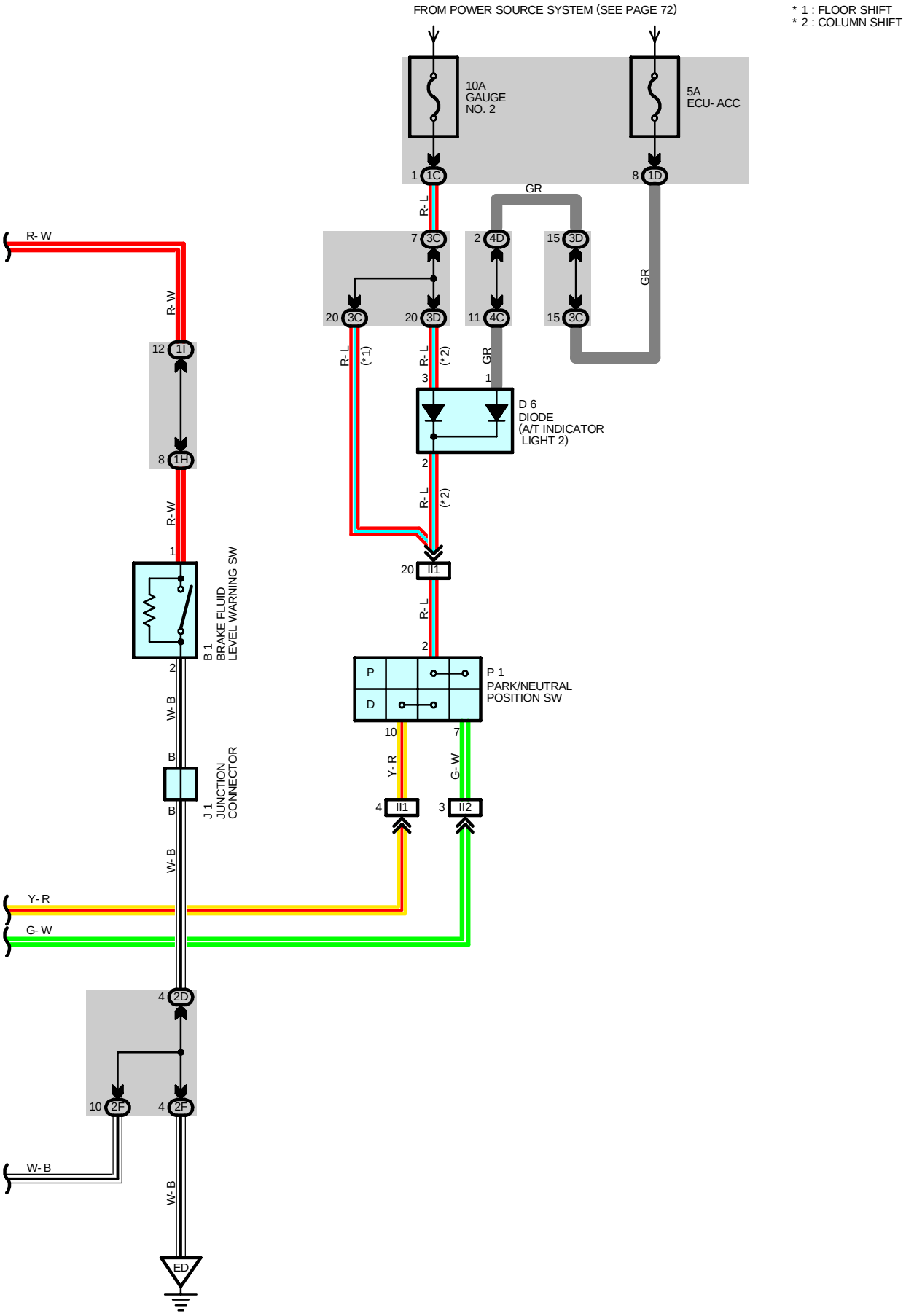
FROM POWER SOURCE SYSTEM (SEE PAGE 72)
* 1 : FLOOR SHIFT
* 2 : COLUMN SHIFT
10A
GAUGE
NO. 2
5A
ECU- ACC
1C
1D
GR
R- L
7 3C
2 4D
15 3D
20 3C
20 3D
11 4C
15 3C
GR
R- W
R- L
(*1)
R- L
(*2)
GR
12 1I
3
1
D 6
DIODE
(A/T INDICATOR
LIGHT 2)
8 1H
2
R- W
R- L
(*2)
1
20 II1
B 1
BRAKE FLUID
LEVEL WARNING SW
R- L
2
P
D
P 1
PARK/NEUTRAL
POSITION SW
2
10
7
W- B
Y- R
G- W
B
J 1
JUNCTION
CONNECTOR
4 II1
3 II2
B
W- B
Y- R
G- W
4 2D
10 2F
4 2F
W- B
W- B
ED

VSC (w/ TRACTION CONTROL)

SYSTEM OUTLINE

The vehicle could be in an extreme over steering or under steering tendency due to unexpected accidents, road conditions, vehicle speed, or by other external factors. In such a case, this system automatically controls the engine output and the braking to each wheel, to decrease the extreme over steering and under steering.

* To decrease extreme over steering tendency

When the system determines that the over steering tendency is large, the system applies brakes to the outer wheels according to the degree of over steering, and creates a moment towards the outer side of the vehicle, to decrease the tendency of over steering. Also, when the brakes are applied, the vehicle speed decreases while the stability increases.

* To decrease extreme under steering tendency

When the system determines that the under steering tendency is large, the system applies brakes to the front or rear wheels according to the degree of under steering, to decrease the tendency of under steering.

* VSC OFF SW

The SW to send the VSC system into OFF mode. When the SW is pushed after starting the engine, the system will be in OFF mode, and the VSC off indicator light will turn on. When the SW is pushed again, the system will be in standby mode. When the engine is stopped and re-started, regardless of the VSC OFF SW, the system will be in standby mode.

Information to the driver

The VSC system informs the driver when the tire grip is about to exceed its grip capacity, by blinking the slip indicator light and turning on the buzzer. Accordingly, the driver is informed to drive more gently.

SERVICE HINTS

A8, A9 ABS SPEED SENSOR FRONT LH, RH

1-2 : **1.5** - **1.7** kΩ (**20**˚C, **68**˚F)

A29, A30 ABS SPEED SENSOR REAR LH, RH

1-2 : **1.5** - **1.7** kΩ (**20**˚C, **68**˚F)

A20 ABS & BA & TRAC & VSC ECU

51-GROUND : Always approx. **12** volts

48-GROUND : Approx. **12** volts with the stop light SW on

28, 29-GROUND : Always continuity

S4 STOP LIGHT SW

2-1 : Closed with brake pedal depressed

○ : PARTS LOCATION

Code	See Page	Code	See Page	Code	See Page
A4 A	44	D2	48 (Floor Shift)	M3 A	47 (Column Shift)
A5 B	44	D3	46 (Column Shift)		49 (Floor Shift)
A8	44		48 (Floor Shift)	M6 D	47 (Column Shift)
A9	44	D6	46 (Column Shift)		49 (Floor Shift)
A20	46 (Column Shift)	E7 D	46 (Column Shift)	M7 E	47 (Column Shift)
	48 (Floor Shift)		48 (Floor Shift)		49 (Floor Shift)
A21	46 (Column Shift)	E8 E	46 (Column Shift)	P1	45
	48 (Floor Shift)		48 (Floor Shift)	P3	47 (Column Shift)
A29	50	J1	47 (Column Shift)		49 (Floor Shift)
A30	50		49 (Floor Shift)	S4	47 (Column Shift)
B1	44	J4	47 (Column Shift)		49 (Floor Shift)
B4	46 (Column Shift)		49 (Floor Shift)	T5	47 (Column Shift)
	48 (Floor Shift)	J5	47 (Column Shift)		49 (Floor Shift)
C11	46 (Column Shift)		49 (Floor Shift)	V8	47 (Column Shift)
	48 (Floor Shift)	J6	47 (Column Shift)		49 (Floor Shift)
C15	46 (Column Shift)		49 (Floor Shift)	V9	47 (Column Shift)
	48 (Floor Shift)	J9	47 (Column Shift)		49 (Floor Shift)
D1	44		49 (Floor Shift)	Y1	47 (Column Shift)
D2	46 (Column Shift)	M2	45		49 (Floor Shift)

: RELAY BLOCKS

Code	See Page	Relay Blocks (Relay Block Location)
3	24	Engine Room R/B No.3 (Near the Radiator Fan)
5	25	Engine Room R/B No.5 (Engine Compartment Left)

: JUNCTION BLOCK AND WIRE HARNESS CONNECTOR

Code	See Page	Junction Block and Wire Harness (Connector Location)
1B	27	Cowl Wire and Driver Side J/B (Lower Finish Panel)
1C		
1D		
1H	27	Engine Room Main Wire and Driver Side J/B (Lower Finish Panel)
1I	27	Cowl Wire and Driver Side J/B (Lower Finish Panel)
2D	30	Engine Room Main Wire and Engine Room J/B (Engine Compartment Left)
2F		
3A	34	Cowl Wire and J/B No.3 (Left Kick Panel)
3B		
3C		
3D		
3F	35	Instrument Panel Wire and J/B No.3 (Left Kick Panel)
3G		
3H	35	Cowl Wire and J/B No.3 (Left Kick Panel)
4A	38	Cowl Wire and J/B No.4 (Right Kick Panel)
4B		
4C		
4D		
4F	39	Instrument Panel Wire and J/B No.4 (Right Kick Panel)
4H		

: CONNECTOR JOINING WIRE HARNESS AND WIRE HARNESS

Code	See Page	Joining Wire Harness and Wire Harness (Connector Location)
IC1	56 (Column Shift)	Cowl Wire and Instrument Panel Wire (Left Kick Panel)
	60 (Floor Shift)	
ID1	56 (Column Shift)	Floor No.1 Wire and Cowl Wire (Left Kick Panel)
	60 (Floor Shift)	
IE1	56 (Column Shift)	Engine Room Main Wire and Cowl Wire (Behind the Driver Side J/B)
	60 (Floor Shift)	
IF3	56 (Column Shift)	Engine Room Main Wire and Cowl Wire (Left Side of Instrument Panel)
	60 (Floor Shift)	
II1	58 (Column Shift)	Engine Wire and Cowl Wire (Behind the Glove Box)
	62 (Floor Shift)	
II2	58 (Column Shift)	
	62 (Floor Shift)	
IK1	58 (Column Shift)	Floor No.2 Wire and Cowl Wire (Right Kick Panel)
	62 (Floor Shift)	
IL1	58 (Column Shift)	Cowl Wire and Instrument Panel Wire (Right Kick Panel)
	62 (Floor Shift)	

VSC (w/ TRACTION CONTROL)

 **: GROUND POINTS**

Code	See Page	Ground Points Location
ED	54	Front Side of Left Fender
EE		
IG	56 (Column Shift)	Cowl Side Panel LH
	60 (Floor Shift)	
II	56 (Column Shift)	Right Kick Panel
	60 (Floor Shift)	
IJ	56 (Column Shift)	Cowl Side Panel RH
	60 (Floor Shift)	

 **: SPLICE POINTS**

Code	See Page	Wire Harness with Splice Points	Code	See Page	Wire Harness with Splice Points
I1	58 (Column Shift)	Floor Wire	I9	62 (Floor Shift)	Cowl Wire
	62 (Floor Shift)		I15	58 (Column Shift)	
I4	58 (Column Shift)	Cowl Wire		62 (Floor Shift)	
	62 (Floor Shift)		I20	58 (Column Shift)	
I7	58 (Column Shift)			62 (Floor Shift)	
	62 (Floor Shift)		I24	58 (Column Shift)	
I9	58 (Column Shift)			62 (Floor Shift)	

ABS (w/o TRACTION CONTROL)

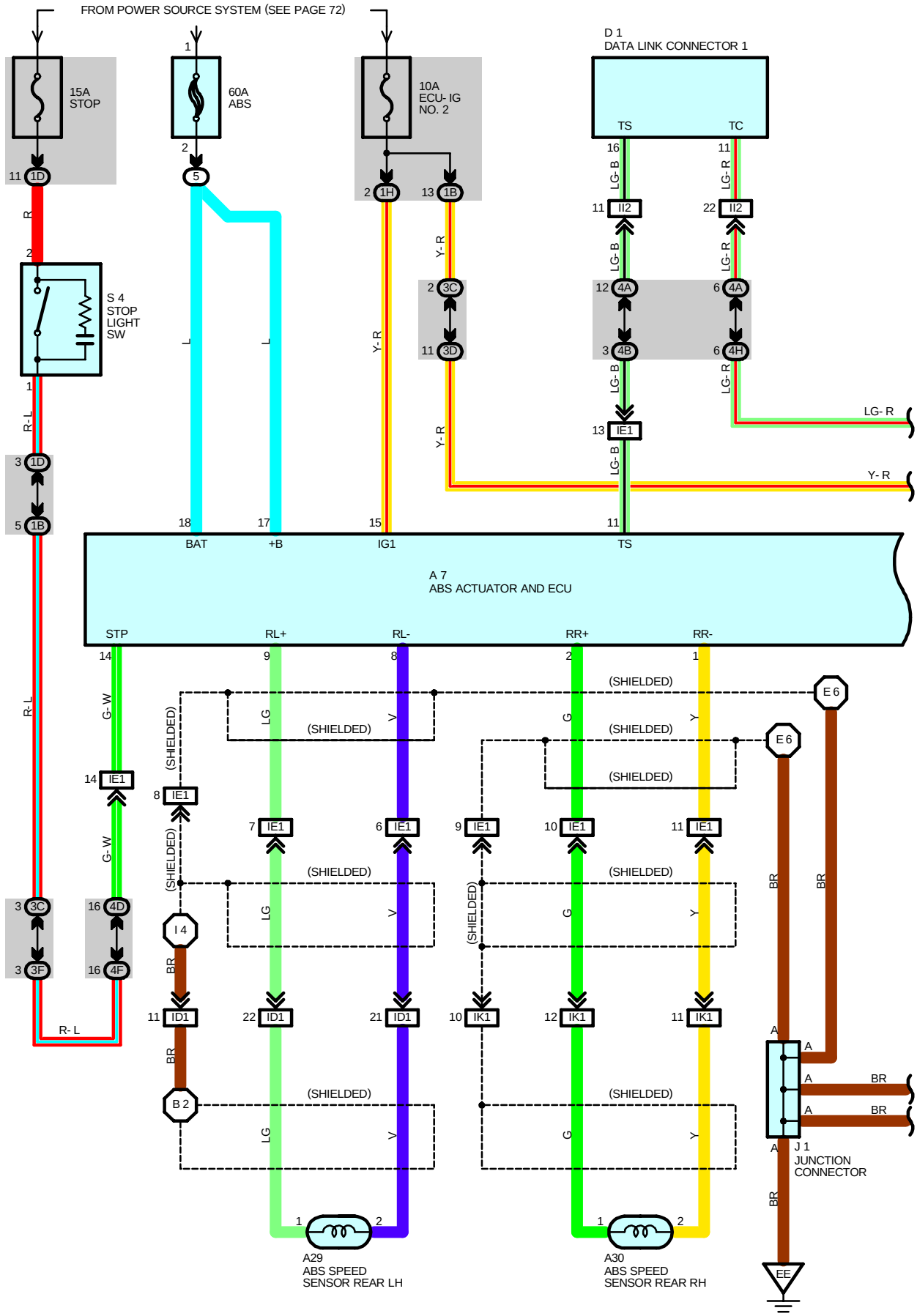

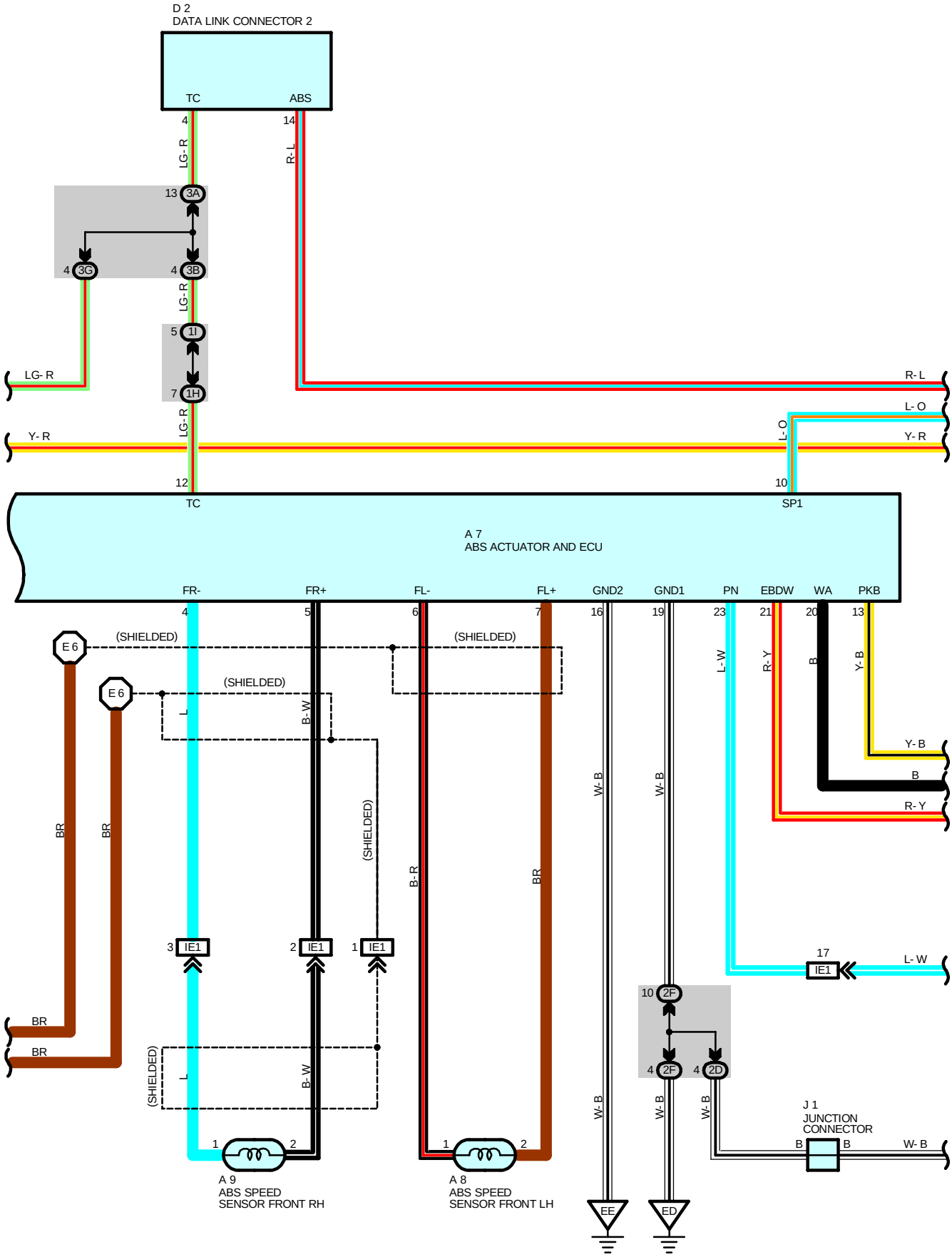
D 2
DATA LINK CONNECTOR 2
TC
ABS
4
14
LG- R
R- L
13
3A
4
3G
4
3B
LG- R
5
1I
LG- R
7
1H
LG- R
Y- R
12
TC
10
SP1
L- O
R- L
L- O
Y- R
A 7
ABS ACTUATOR AND ECU
FR-
FR+
FL-
FL+
GND2
GND1
PN
EBDW
WA
PKB
4
5
6
7
16
19
23
21
20
13
E 6
(SHIELDED)
E 6
(SHIELDED)
(SHIELDED)
L
B- W
BR
BR
(SHIELDED)
B- R
BR
W- B
W- B
L- W
R- Y
B
Y- B
Y- B
B
R- Y
3
IE1
2
IE1
1
IE1
17
IE1
L- W
BR
BR
10
2F
4
2F
4
2D
(SHIELDED)
L
B- W
W- B
W- B
W- B
J 1
JUNCTION
CONNECTOR
B
B
W- B
1
2
A 9
ABS SPEED
SENSOR FRONT RH
1
2
A 8
ABS SPEED
SENSOR FRONT LH
EE
ED

ABS (w/o TRACTION CONTROL)

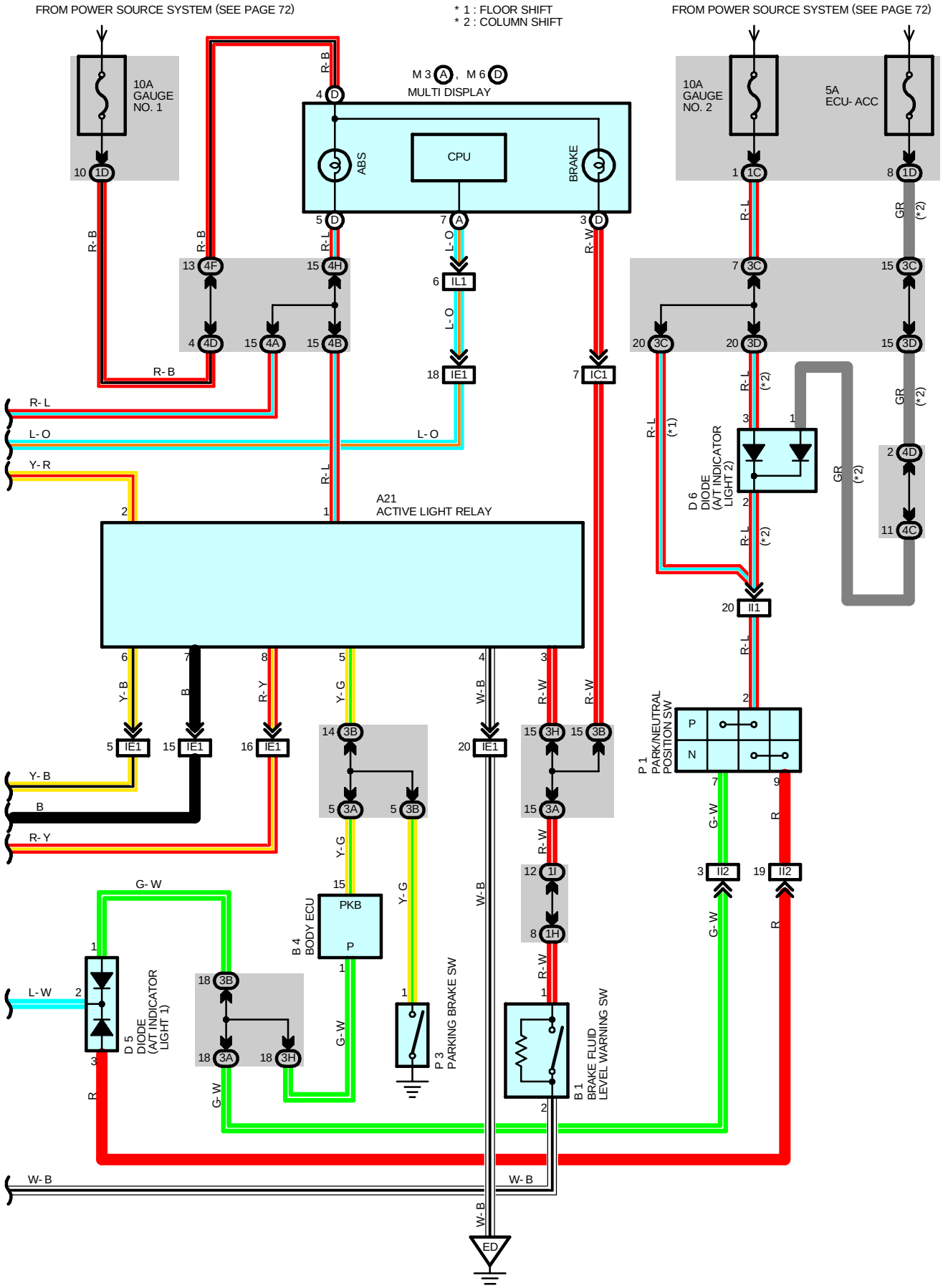

SYSTEM OUTLINE

ABS is a brake system designed for the purpose to improve the operating ability securing the stability of the vehicle by preventing the locking-up of the vehicle controlling the wheel cylinder pressure of all the four wheels at the time of sudden braking.

1. INPUT SIGNALS

(1) Speed sensor signal

The speed of the wheels is detected and input to TERMINALS FL+, FR+, RL+, and RR+ of the ABS actuator and ECU.

(2) Stop light SW signal

A signal is input to TERMINAL STP of the ABS actuator and ECU when brake pedal is depressed.

2. SYSTEM OPERATION

When the wheels are to be locked-up, the solenoid inside the actuator will be controlled by the signal from the ABS actuator and ECU and the brake fluid in the wheel cylinder will flow through the reservoir and reduce the hydraulic pressure.

While the ABS is in operation, as the ABS actuator and ECU always outputs the operation signal to the pump inside the actuator, brake fluid stored inside the reservoir will be sucked up by the pump inside the actuator and returned to the master cylinder.

When the hydraulic pressure of the wheel cylinder is decompressed or increased until the necessary hydraulic pressure, the solenoid inside the actuator is controlled by the control signal from the ABS actuator and ECU and as a result, hydraulic pressure of the wheel cylinder will be closed at both routes of the master cylinder and reservoir sides and the hydraulic pressure of the wheel cylinder will become to be in the holding condition.

If the increase of hydraulic pressure volume of the wheel cylinder becomes necessary, with the control signal from the ABS actuator and ECU, the solenoid inside the actuator will be controlled and become the same condition as usual and the brake fluid of the master cylinder will be sent to the wheel cylinder and will increase the hydraulic pressure of the wheel cylinder. At this time, in the case that the brake fluid stays left in the reservoir, it will be suctioned up by the pump inside the actuator and will be sent to the wheel cylinder.

Also, increasing speed of the hydraulic pressure is controlled by outputting the increasing and the said holding one after another.

SERVICE HINTS

A8, A9 ABS SPEED SENSOR FRONT LH, RH

1-2 : **1.5** - **1.7** kΩ (**20**°C, **68**°F)

A29, A30 ABS SPEED SENSOR REAR LH, RH

1-2 : **1.5** - **1.7** kΩ (**20**°C, **68**°F)

A7 ABS ACTUATOR AND ECU

17, 18-GROUND : Always approx. **12** volts

14-GROUND : Approx. **12** volts with the stop light SW on

15-GROUND : Approx. **12** volts with the ignition SW at **ON** position

16, 19-GROUND : Always continuity

: PARTS LOCATION

Code	See Page	Code	See Page	Code		See Page
A7	44	B4	48 (Floor Shift)	M3	A	47 (Column Shift)
A8	44	D1	44			49 (Floor Shift)
A9	44	D2	46 (Column Shift)	M6	D	47 (Column Shift)
A21	46 (Column Shift)		48 (Floor Shift)			49 (Floor Shift)
	48 (Floor Shift)	D5	46 (Column Shift)	P1		45
A29	50		48 (Floor Shift)	P3		47 (Column Shift)
A30	50	D6	46 (Column Shift)			49 (Floor Shift)
B1	44	J1	47 (Column Shift)	S4		47 (Column Shift)
B4	46 (Column Shift)		49 (Floor Shift)			49 (Floor Shift)

: RELAY BLOCKS

Code	See Page	Relay Blocks (Relay Block Location)
5	25	Engine Room R/B No.5 (Engine Compartment Left)

ABS (w/o TRACTION CONTROL)



: JUNCTION BLOCK AND WIRE HARNESS CONNECTOR

Code	See Page	Junction Block and Wire Harness (Connector Location)
1B	27	Cowl Wire and Driver Side J/B (Lower Finish Panel)
1C		
1D		
1H	27	Engine Room Main Wire and Driver Side J/B (Lower Finish Panel)
1I	27	Cowl Wire and Driver Side J/B (Lower Finish Panel)
2D	30	Engine Room Main Wire and Engine Room J/B (Engine Compartment Left)
2F		
3A	34	Cowl Wire and J/B No.3 (Left Kick Panel)
3B		
3C		
3D		
3F	35	Instrument Panel Wire and J/B No.3 (Left Kick Panel)
3G		
3H	35	Cowl Wire and J/B No.3 (Left Kick Panel)
4A	38	Cowl Wire and J/B No.4 (Right Kick Panel)
4B		
4C		
4D		
4F	39	Instrument Panel Wire and J/B No.4 (Right Kick Panel)
4H		



: CONNECTOR JOINING WIRE HARNESS AND WIRE HARNESS

Code	See Page	Joining Wire Harness and Wire Harness (Connector Location)
IC1	56 (Column Shift)	Cowl Wire and Instrument Panel Wire (Left Kick Panel)
	60 (Floor Shift)	
ID1	56 (Column Shift)	Floor No.1 Wire and Cowl Wire (Left Kick Panel)
	60 (Floor Shift)	
IE1	56 (Column Shift)	Engine Room Main Wire and Cowl Wire (Behind the Driver Side J/B)
	60 (Floor Shift)	
II1	58 (Column Shift)	Engine Wire and Cowl Wire (Behind the Glove Box)
	62 (Floor Shift)	
II2	58 (Column Shift)	
	62 (Floor Shift)	
IK1	58 (Column Shift)	Floor No.2 Wire and Cowl Wire (Right Kick Panel)
	62 (Floor Shift)	
IL1	58 (Column Shift)	Cowl Wire and Instrument Panel Wire (Right Kick Panel)
	62 (Floor Shift)	



: GROUND POINTS

Code	See Page	Ground Points Location
ED	54	Front Side of Left Fender
EE		



: SPLICE POINTS

Code	See Page	Wire Harness with Splice Points	Code	See Page	Wire Harness with Splice Points
E6	54	Engine Room Main Wire	I4	62 (Floor Shift)	Cowl Wire
I4	58 (Column Shift)	Cowl Wire	B2	64	Floor No.1 Wire

NOTICE: When inspecting or repairing the SRS, perform the operation in accordance with the following precautionary instructions and the procedure and precautions in the Repair Manual for the applicable model year.

- Malfunction symptoms of the SRS are difficult to confirm, so the DTCs become the most important source of information when troubleshooting. When troubleshooting the SRS, always inspect the DTCs before disconnecting the battery.
- **Work must be started after 90 seconds from when the ignition switch is turned to the "LOCK" position and the negative (-) terminal cable is disconnected from the battery.**
  (The SRS is equipped with a back-up power source so that if work is started within 90 seconds from disconnecting the negative (-) terminal cable of the battery, the SRS may be deployed.)
- When the negative (-) terminal cable is disconnected from the battery, the memory of the clock and audio system will be canceled. So before starting work, make a record of the contents memorized in the audio memory system. When work is finished, reset the audio systems as they were before and adjust the clock. To avoid erasing the memory in each memory system, never use a back-up power supply from outside the vehicle.
- Before repairs, remove the airbag sensor if shocks are likely to be applied to the sensor during repairs.
- Do not expose the steering wheel pad, front passenger airbag assembly, side airbag assembly, seat belt pretensioner, airbag sensor assembly, front airbag sensor assembly or side airbag sensor assembly directly to hot air or flames.
- Even in cases of a minor collision where the SRS does not deploy, the steering wheel pad, front passenger airbag assembly, side airbag assembly, seat belt pretensioner, airbag sensor assembly, front airbag sensor assembly and side airbag sensor assembly should be inspected.
- Never use SRS parts from another vehicle. When replacing parts, replace them with new parts.
- Never disassemble and repair the steering wheel pad, front passenger airbag assembly, side airbag assembly, seat belt pretensioner, airbag sensor assembly, front airbag sensor assembly or side airbag sensor assembly in order to reuse it.
- If the steering wheel pad, front passenger airbag assembly, side airbag assembly, seat belt pretensioner, airbag sensor assembly, front airbag sensor assembly or side airbag sensor assembly has been dropped, or if there are cracks, dents or other defects in the case, bracket or connector, replace them with new ones.
- Use a volt/ohmmeter with high impedance (10 kΩ/V minimum) for troubleshooting the system's electrical circuits.
- Information labels are attached to the periphery of the SRS components. Follow the instructions on the notices.
- After work on the SRS is completed, perform the SRS warning light check.
- If the vehicle is equipped with a mobile communication system, refer to the precaution in the IN section of the Repair Manual.

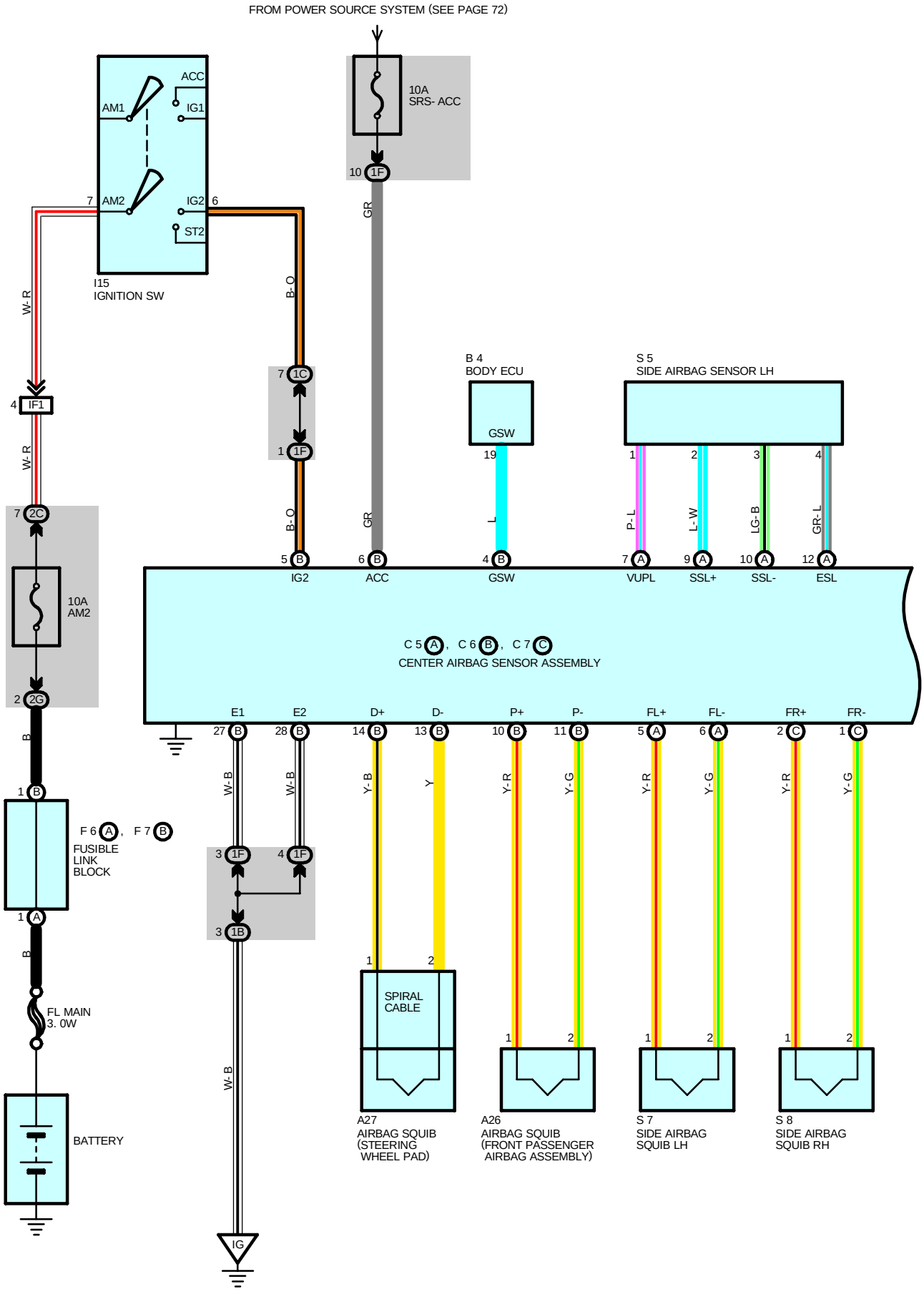
FROM POWER SOURCE SYSTEM (SEE PAGE 72)
10A
SRS- ACC
10 1F
GR
ACC
AM1
IG1
AM2
IG2
ST2
7
6
I15
IGNITION SW
W-R
B-O
4 IF1
7 1C
1 1F
B 4
BODY ECU
GSW
19
L
S 5
SIDE AIRBAG SENSOR LH
1
2
3
4
P-L
L-W
LG-B
GR-L
7 2C
10A
AM2
2 2G
B
1 B
F 6 A , F 7 B
FUSIBLE
LINK
BLOCK
1 A
B
FL MAIN
3. 0W
BATTERY
5 B
IG2
6 B
ACC
4 B
GSW
7 A
VUPL
9 A
SSL+
10 A
SSL-
12 A
ESL
C 5 A , C 6 B , C 7 C
CENTER AIRBAG SENSOR ASSEMBLY
E1
E2
D+
D-
P+
P-
FL+
FL-
FR+
FR-
27 B
28 B
14 B
13 B
10 B
11 B
5 A
6 A
2 C
1 C
W-B
Y-B
Y
Y-R
Y-G
3 1F
4 1F
3 1B
IG
SPIRAL
CABLE
A27
AIRBAG SQUIB
(STEERING
WHEEL PAD)
A26
AIRBAG SQUIB
(FRONT PASSENGER
AIRBAG ASSEMBLY)
S 7
SIDE AIRBAG
SQUIB LH
S 8
SIDE AIRBAG
SQUIB RH

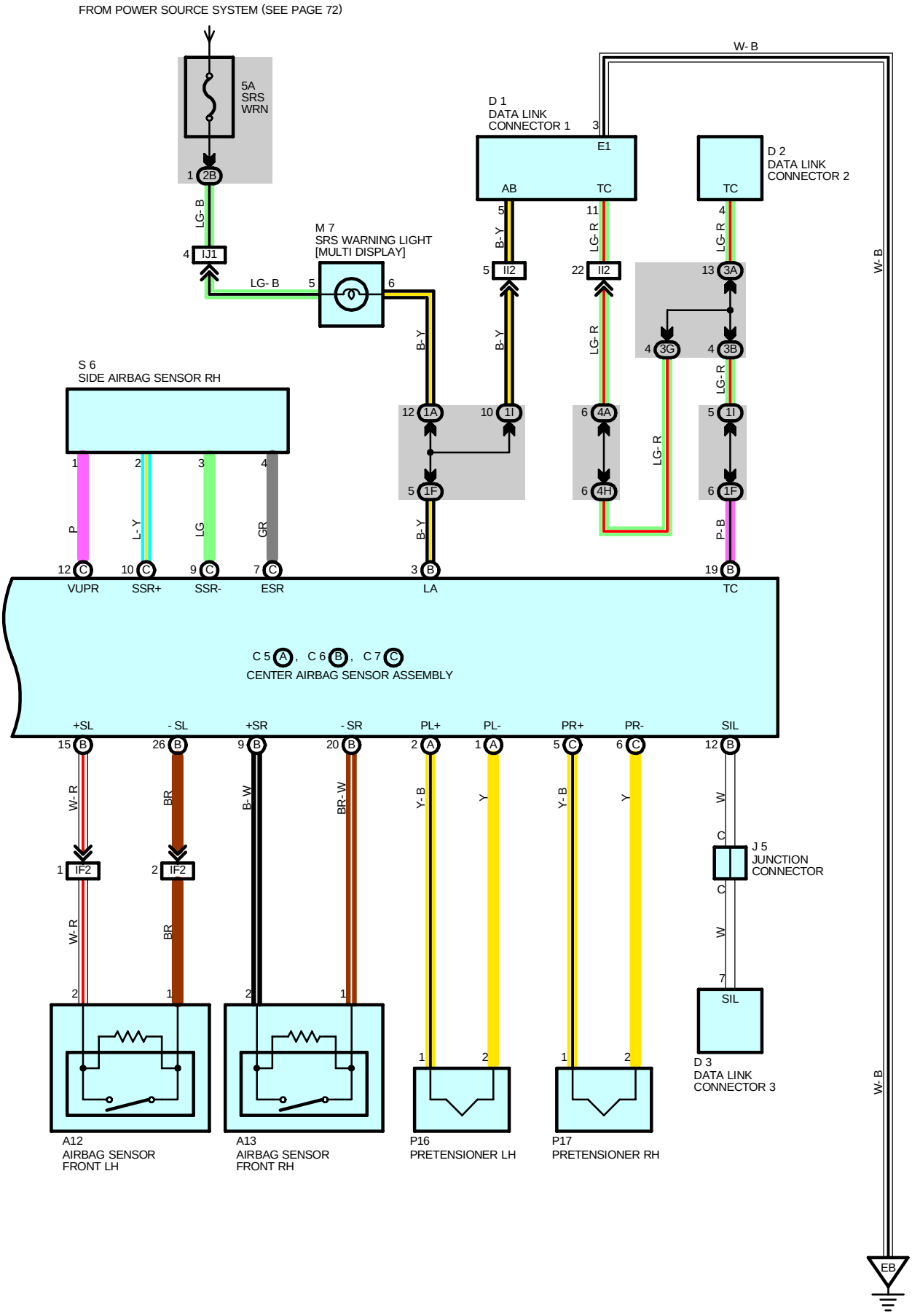
FROM POWER SOURCE SYSTEM (SEE PAGE 72)
5A
SRS
WRN
1 2B
LG- B
4 IJ1
LG- B 5
M 7
SRS WARNING LIGHT
[MULTI DISPLAY]
6
B- Y
W- B
D 1
DATA LINK
CONNECTOR 1
3
E1
AB
TC
5
B- Y
5 II2
11
LG- R
22 II2
D 2
DATA LINK
CONNECTOR 2
TC
4
LG- R
13 3A
4 3G
4 3B
LG- R
S 6
SIDE AIRBAG SENSOR RH
12 1A
10 1I
6 4A
5 1I
5 1F
6 4H
6 1F
LG- R
P- B
1
2
3
4
P
L- Y
LG
GR
B- Y
12 C
10 C
9 C
7 C
3 B
19 B
VUPR
SSR+
SSR-
ESR
LA
TC
C 5 A , C 6 B , C 7 C
CENTER AIRBAG SENSOR ASSEMBLY
+SL
- SL
+SR
- SR
PL+
PL-
PR+
PR-
SIL
15 B
26 B
9 B
20 B
2 A
1 A
5 C
6 C
12 B
W- R
BR
B- W
BR- W
Y- B
Y
Y- B
Y
W
C
J 5
JUNCTION
CONNECTOR
C
W
1 IF2
2 IF2
7
SIL
D 3
DATA LINK
CONNECTOR 3
W- B
EB
A12
AIRBAG SENSOR
FRONT LH
A13
AIRBAG SENSOR
FRONT RH
P16
PRETENSIONER LH
P17
PRETENSIONER RH

SYSTEM OUTLINE

The SRS is a driver and front passenger protection device which has a supplemental role to the seat belts.
When the ignition SW is turned to ACC or ON, current from the SRS-ACC fuse flows to TERMINAL (A) 6 of the center airbag sensor assembly.
If an accident occurs while driving, when the frontal impact exceeds a set level, current from the SRS-ACC fuse flows to TERMINALS (A) 2, (B) 10, (B) 14 and (C) 5 of the center airbag sensor assembly to TERMINAL 1 of the airbag squibs and the pretensioners to TERMINAL 2 to TERMINALS (A) 1, (B) 11, (B) 13 and (C) 6 of the center airbag sensor assembly to TERMINAL (B) 27, (B) 28 or BODY GROUND to GROUND, so that current flows to the airbag squibs and the pretensioners and causes them to operate.
When the side impact also exceeds a set level, current from the SRS-ACC fuse flows to TERMINALS (A) 2, (A) 5, (C) 2 and (C) 5 of the center airbag sensor assembly to TERMINAL 1 of the side airbag squibs and the pretensioners to TERMINAL 2 to TERMINALS (A)1, (A) 6, (C) 1, and (C) 6 of the center airbag sensor assembly to TERMINAL (B) 27, (B) 28 or BODY GROUND to GROUND, causing side airbag squibs and the pretensioners to operate.
The airbag stored inside the steering wheel pad is instantaneously expanded to soften the shock to the driver.
The airbag stored inside the passenger's instrument panel is instantaneously expanded to soften the shock to the front passenger.
Side airbags are instantaneously expanded to soften the shock of side to the driver and front passenger.
The pretensioners make sure of the seat belt restrainability.

: PARTS LOCATION

Code		See Page	Code		See Page	Code	See Page
A12		44	C6	B	48 (Floor Shift)	I15	49 (Floor Shift)
A13		44	C7	C	46 (Column Shift)	J5	47 (Column Shift)
A26		46 (Column Shift)			48 (Floor Shift)		49 (Floor Shift)
		48 (Floor Shift)	D1		44	M7	47 (Column Shift)
A27		46 (Column Shift)	D2		46 (Column Shift)		49 (Floor Shift)
		48 (Floor Shift)			48 (Floor Shift)	P16	51
B4		46 (Column Shift)	D3		46 (Column Shift)	P17	51
		48 (Floor Shift)			48 (Floor Shift)	S5	51
C5	A	46 (Column Shift)	F6	A	44	S6	51
		48 (Floor Shift)	F7	B	44	S7	51
C6	B	46 (Column Shift)	I15		47 (Column Shift)	S8	51

: JUNCTION BLOCK AND WIRE HARNESS CONNECTOR

Code	See Page	Junction Block and Wire Harness (Connector Location)
1A	26	Instrument Panel Wire and Driver Side J/B (Lower Finish Panel)
1B	27	Cowl Wire and Driver Side J/B (Lower Finish Panel)
1C		
1F		
1I		
2B	30	Engine Wire and Engine Room J/B (Engine Compartment Left)
2C	30	Engine Room Main Wire and Engine Room J/B (Engine Compartment Left)
2G	30	Engine Wire and Engine Room J/B (Engine Compartment Left)
3A	34	Cowl Wire and J/B No.3 (Left Kick Panel)
3B		
3G	35	Instrument Panel Wire and J/B No.3 (Left Kick Panel)
4A	38	Cowl Wire and J/B No.4 (Right Kick Panel)
4H	39	Instrument Panel Wire and J/B No.4 (Right Kick Panel)

: CONNECTOR JOINING WIRE HARNESS AND WIRE HARNESS

Code	See Page	Joining Wire Harness and Wire Harness (Connector Location)
IF1	56 (Column Shift)	Engine Room Main Wire and Cowl Wire (Left Side of Instrument Panel)
	60 (Floor Shift)	
IF2	56 (Column Shift)	
	60 (Floor Shift)	
II2	58 (Column Shift)	Engine Wire and Cowl Wire (Behind the Glove Box)
	62 (Floor Shift)	
IJ1	58 (Column Shift)	Engine Wire and Instrument Panel Wire (Right Kick Panel)
	62 (Floor Shift)	

: GROUND POINTS

Code	See Page	Ground Points Location
EB	54	Surge Tank RH
IG	56 (Column Shift)	Cowl Side Panel LH
	60 (Floor Shift)	

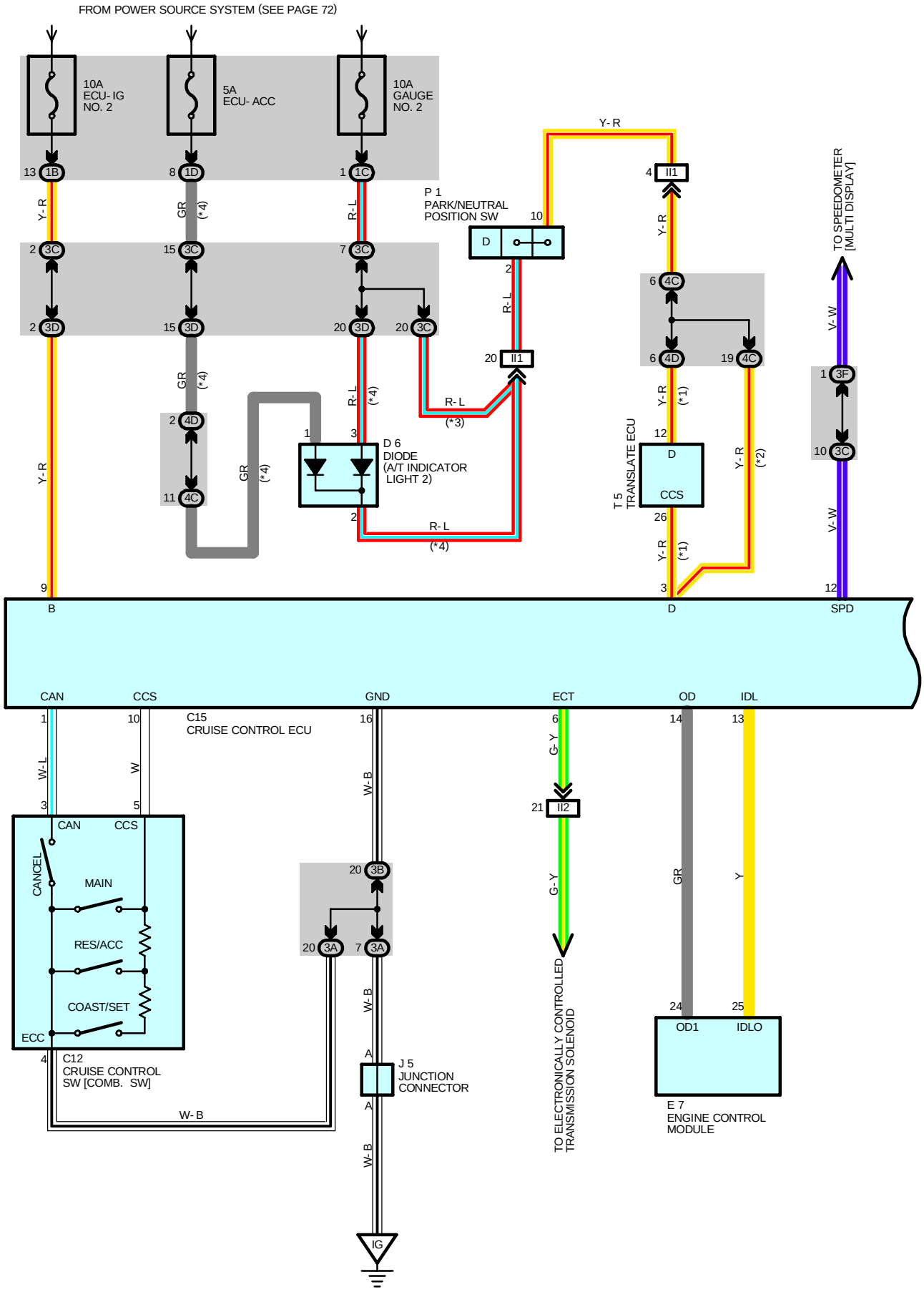
FROM POWER SOURCE SYSTEM (SEE PAGE 72)
10A ECU- IG NO. 2
5A ECU- ACC
10A GAUGE NO. 2
P 1 PARK/NEUTRAL POSITION SW
D 6 DIODE (A/T INDICATOR LIGHT 2)
T 5 TRANSLATE ECU
TO SPEEDOMETER [MULTI DISPLAY]
B
D
SPD
CAN
CCS
GND
ECT
OD
IDL
C15 CRUISE CONTROL ECU
CANCEL
MAIN
RES/ACC
COAST/SET
ECC
C12 CRUISE CONTROL SW [COMB. SW]
J 5 JUNCTION CONNECTOR
IG
TO ELECTRONICALLY CONTROLLED TRANSMISSION SOLENOID
OD1
IDLO
E 7 ENGINE CONTROL MODULE

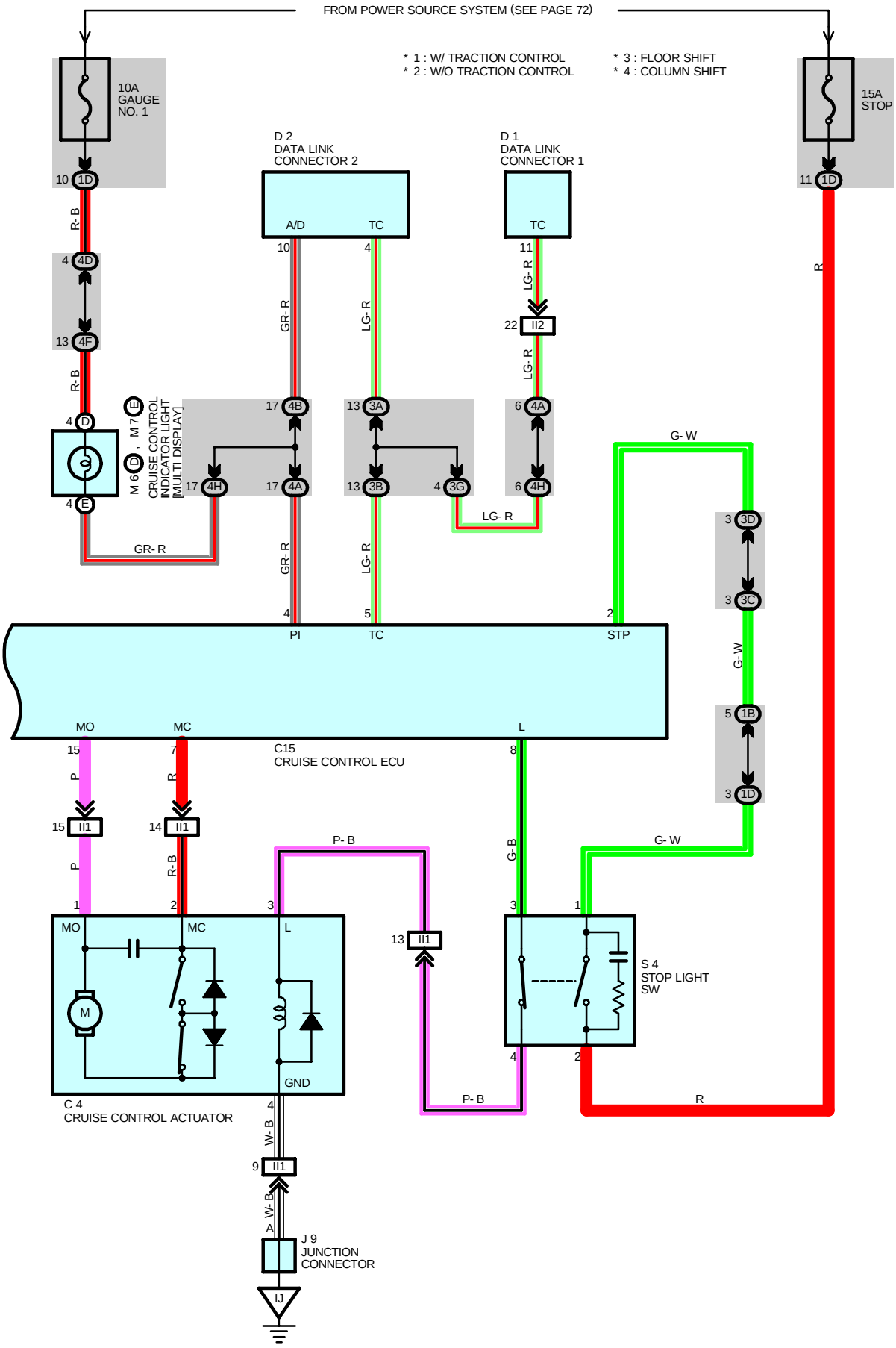
FROM POWER SOURCE SYSTEM (SEE PAGE 72)
* 1 : W/ TRACTION CONTROL
* 2 : W/O TRACTION CONTROL
* 3 : FLOOR SHIFT
* 4 : COLUMN SHIFT
10A GAUGE NO. 1
15A STOP
D 2 DATA LINK CONNECTOR 2
D 1 DATA LINK CONNECTOR 1
A/D
TC
CRUISE CONTROL INDICATOR LIGHT [MULTI DISPLAY]
M 6 , M 7
C15 CRUISE CONTROL ECU
MO
MC
PI
STP
L
GND
C 4 CRUISE CONTROL ACTUATOR
S 4 STOP LIGHT SW
J 9 JUNCTION CONNECTOR
R-B
GR-R
LG-R
P-B
G-W
G-B
W-B
R

SYSTEM OUTLINE

The cruise control system allows to travel at a constant speed, by the operation of the switch, without having to depress the accelerator pedal. In this system, the engine throttle valve opening angle is adjusted automatically to control the vehicle at a constant speed.

1. SET CONTROL

When the SET/COAST SW is operated while traveling with the main SW ON, the speed when the SW is operated to OFF (SW released) is memorized, and the vehicle speed is controlled at that speed.

2. COAST CONTROL

When the SET/COAST SW is operated to ON, the motor in the actuator rotates the throttle valve until it is closed fully to decrease the vehicle speed, and the speed when the SW is operated to OFF is memorized, and the vehicle speed is controlled at that speed.
Furthermore, every time the SET/COAST SW is operated momentarily (Approximately 0.5 sec.) to ON, the memorized vehicle speed is decreased by approximately 1.5km/h.

3. ACCEL CONTROL

When the RESUME/ACCEL SW is operated to ON, the motor in the actuator rotates the throttle valve to open direction to increase the vehicle speed, and the speed when the SW is operated to OFF is memorized, and the vehicle speed is controlled at that speed.
Furthermore, every time the RESUME/ACCEL SW is operated momentarily (Approximately 0.5 sec.) to ON, the memorized vehicle speed is increased by approximately 1.5km/h.

4. MANUAL CANCEL MECHANISM

If any of the following signals are input during cruise control traveling, the magnetic clutch of the actuator is turned off, and the current to the motor flows in the direction to close the throttle valve, and cancel the cruise control.

(1) Stop lamp SW is ON (Brake pedal is depressed)

(2) The CANCEL SW of the control SW is ON

(3) MAIN SW is OFF

5. RESUME CONTROL

After canceling the cruise control (Except when the main SW is OFF) if the vehicle speed is above the minimum speed limit (Approximately 40km/h, 25mph), operating the RESUME/ACCEL SW from OFF to ON will cause the system to accelerate and resume to the vehicle speed before manual cancellation.

6. OVERDRIVE FUNCTION

The overdrive may be cut on an uphill grade, while traveling with the cruise control.
After the overdrive is cut, if the vehicle speed reaches the overdrive resume speed (Set speed minus 2km/h), and if the system determines that the uphill grade has finished, the overdrive will resume after the overdrive timer operation.

7. AUTO CANCEL OPERATION

If any of the following conditions are detected, the set speed is erased and the control is canceled.

(1) The motor does not operate

(2) Short in the magnetic clutch

(3) Disconnection in the magnetic clutch (Includes blown STOP fuse)

(4) No vehicle speed signal input

(5) The actual vehicle speed becomes slower than the minimum speed limit

SERVICE HINTS

C12 CRUISE CONTROL SW [COMB. SW]

3-4 : Continuity with the CANCEL SW on
5-4 : Approx. **0** Ω with the CRUISE SW on
Approx. **240** Ω with the RES/ACC SW on
Approx. **630** Ω with the COAST/SET SW on

C15 CRUISE CONTROL ECU

9-GROUND : Approx. **12** volts with the ignition SW at **ON** position
1-GROUND : Approx. **12** volts with the CANCEL SW on
10-GROUND : Approx. **0** Ω with the CRUISE SW on
Approx. **240** Ω with the RES/ACC SW on
Approx. **630** Ω with the COAST/SET SW on
16-GROUND : Always continuity

C4 CRUISE CONTROL ACTUATOR

3-4 : Approx. **38.5** Ω

: PARTS LOCATION

Code	See Page	Code	See Page	Code	See Page
C4	44	D6	46 (Column Shift)	M6 D	49 (Floor Shift)
C12	46 (Column Shift)	E7	46 (Column Shift)	M7 E	47 (Column Shift)
	48 (Floor Shift)		48 (Floor Shift)		49 (Floor Shift)
C15	46 (Column Shift)	J5	47 (Column Shift)	P1	45
	48 (Floor Shift)		49 (Floor Shift)	S4	47 (Column Shift)
D1	44	J9	47 (Column Shift)		49 (Floor Shift)
D2	46 (Column Shift)		49 (Floor Shift)	T5	47 (Column Shift)
	48 (Floor Shift)	M6 D	47 (Column Shift)		49 (Floor Shift)

: JUNCTION BLOCK AND WIRE HARNESS CONNECTOR

Code	See Page	Junction Block and Wire Harness (Connector Location)
1B	27	Cowl Wire and Driver Side J/B (Lower Finish Panel)
1C		
1D		
3A	34	Cowl Wire and J/B No.3 (Left Kick Panel)
3B		
3C		
3D		
3F	35	Instrument Panel Wire and J/B No.3 (Left Kick Panel)
3G		
4A	38	Cowl Wire and J/B No.4 (Right Kick Panel)
4B		
4C		
4D		
4F	39	Instrument Panel Wire and J/B No.4 (Right Kick Panel)
4H		

: CONNECTOR JOINING WIRE HARNESS AND WIRE HARNESS

Code	See Page	Joining Wire Harness and Wire Harness (Connector Location)
II1	58 (Column Shift)	Engine Wire and Cowl Wire (Behind the Glove Box)
	62 (Floor Shift)	
II2	58 (Column Shift)	
	62 (Floor Shift)	

▽ : GROUND POINTS

Code	See Page	Ground Points Location
IG	56 (Column Shift)	Cowl Side Panel LH
	60 (Floor Shift)	
IJ	56 (Column Shift)	Cowl Side Panel RH
	60 (Floor Shift)	

ELECTRONICALLY CONTROLLED TRANSMISSION AND A/T INDICATOR

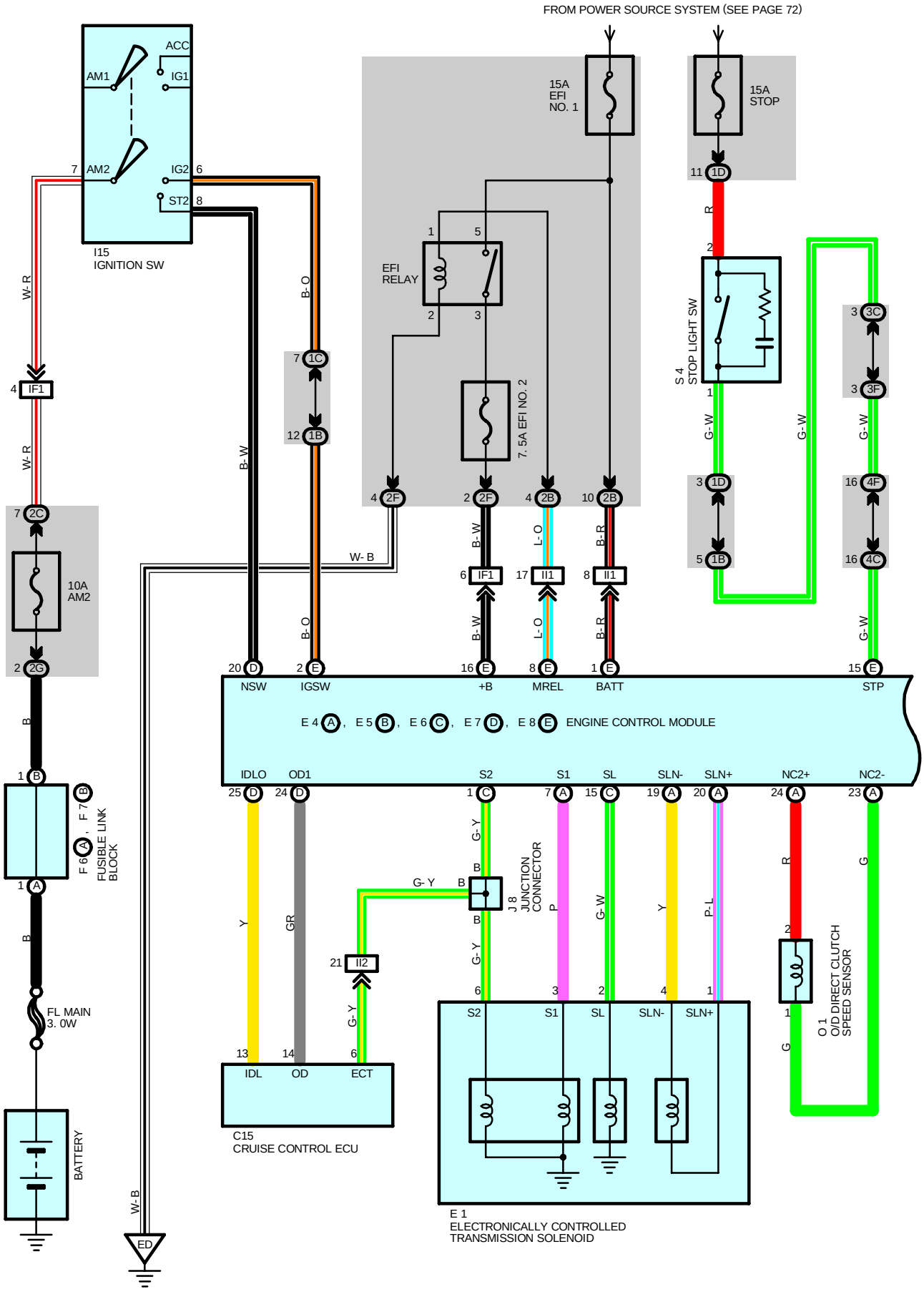

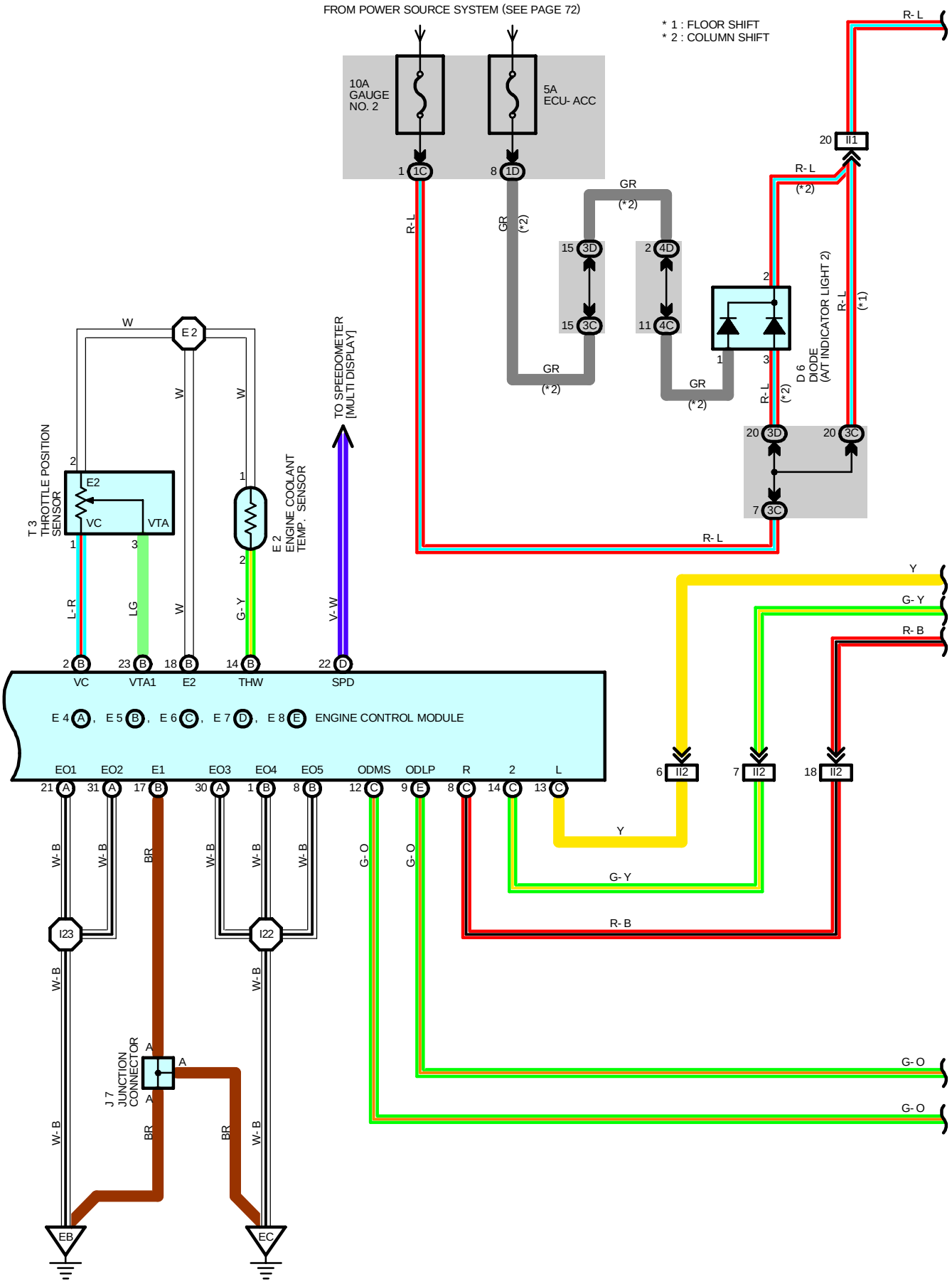
FROM POWER SOURCE SYSTEM (SEE PAGE 72)
* 1 : FLOOR SHIFT
* 2 : COLUMN SHIFT
10A GAUGE NO. 2
5A ECU- ACC
1 1C
8 1D
R- L
GR (*2)
15 3D
15 3C
2 4D
11 4C
20 II1
R- L (*2)
R- L (*1)
D 6 DIODE (A/T INDICATOR LIGHT 2)
20 3D
20 3C
7 3C
R- L
TO SPEEDOMETER [MULTI DISPLAY]
V- W
T 3 THROTTLE POSITION SENSOR
E2
VC
VTA
E 2 ENGINE COOLANT TEMP. SENSOR
L- R
LG
W
G- Y
2 B VC
23 B VTA1
18 B E2
14 B THW
22 D SPD
E 4 A, E 5 B, E 6 C, E 7 D, E 8 E ENGINE CONTROL MODULE
EO1 EO2 E1 EO3 EO4 EO5 ODMS ODLP R 2 L
21 A 31 A 17 B 30 A 1 B 8 B 12 C 9 E 8 C 14 C 13 C
6 II2
7 II2
18 II2
Y
G- Y
R- B
W- B
BR
G- O
I23
I22
J 7 JUNCTION CONNECTOR
EB
EC

ELECTRONICALLY CONTROLLED TRANSMISSION AND A/T INDICATOR

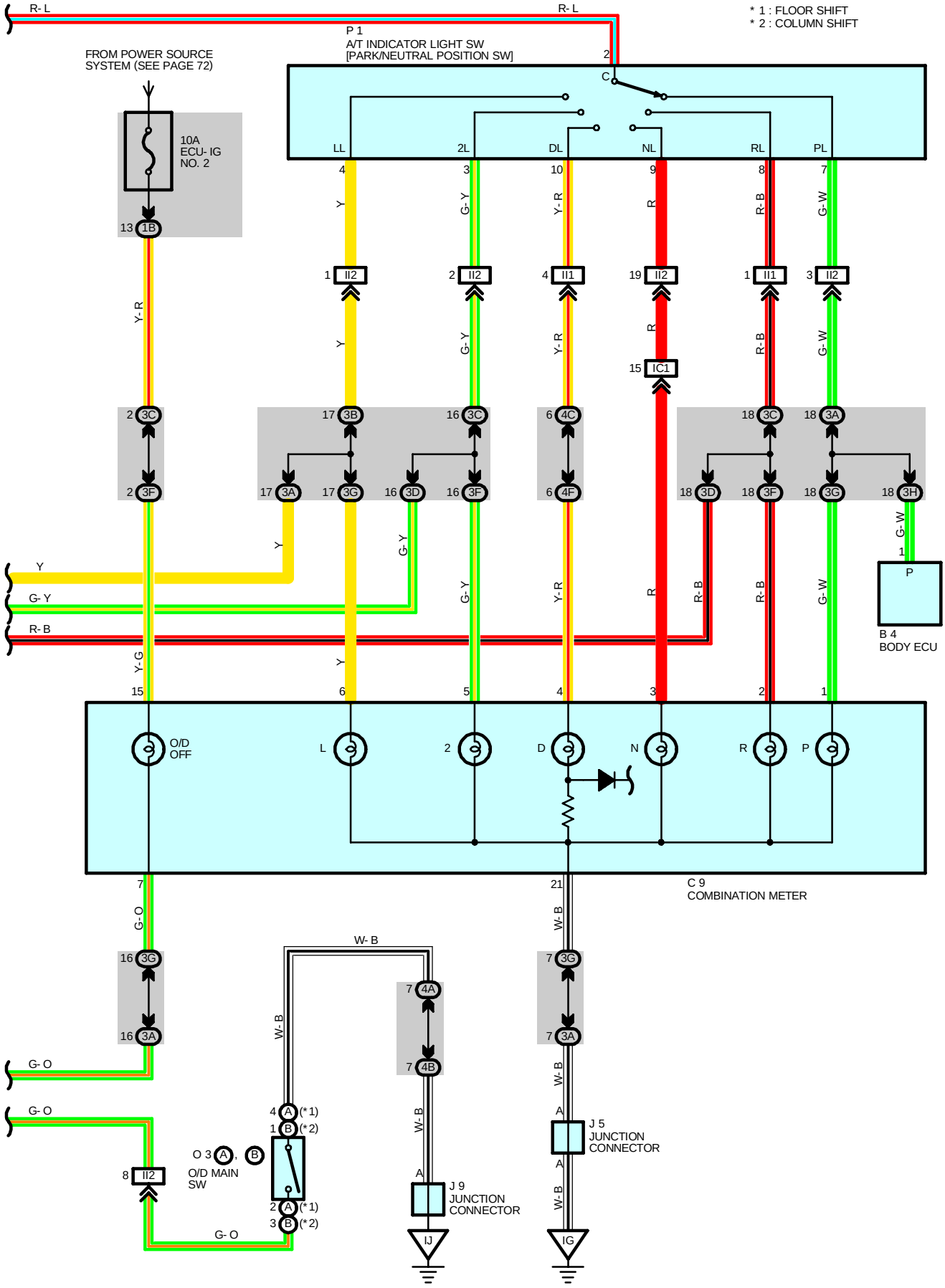

SYSTEM OUTLINE

Previous automatic transaxle have selected each gear shift using the mechanically controlled throttle hydraulic pressure, governor hydraulic pressure and lock-up hydraulic pressure. The electronically controlled transmission, however, electrically controls the line pressure and lock-up pressure etc., through the solenoid valve. Engine control module control of the solenoid valve based on the input signals from each sensor makes smooth driving possible by shift selection for each gear which is most appropriate to the driving conditions at theat time.

1. GEAR SHIFT OPERATION

During driving, the engine control module selects the shift for each gear which is most appropriate to the driving conditions, based on input signals from the engine coolant temp. sensor to TERMINAL THW of the engine control module, and also the input signals to TERMINAL NC2+ of the engine control module from the vehicle speed sensor devoted to the electronically controlled transmission. Current is then output to the electronically controlled transmission solenoid. When shifting to 1st speed, current flows from TERMINAL S1 of the engine control module to TERMINAL 3 of the electronically controlled transmission solenoid to GROUND, and continuity to the No.1 solenoid causes the shift.
For the 2nd speed, current flows from TERMINAL S1 of the engine control module to TERMINAL 3 of the electronically controlled transmission solenoid to GROUND, and from TERMINAL S2 of the engine control module to TERMINAL 6 of the electronically controlled transmission solenoid to GROUND, and continuity to solenoids No.1 and No.2 cause the shift.
For the 3rd speed, there is no continuity to No.1 solenoid, only to No.2, causing the shift.
Shifting into 4th speed (Overdrive) takes place when there is no continuity to either No.1 or No.2 solenoid.

2. LOCK -UP OPERATION

When the engine control module judges from each signal that lock-up operation conditions have been met, current flows from TERMINAL SL of the engine control module to TERMINAL 2 of the electronically controlled transmission solenoid to GROUND, causing continuity to the lock-up solenoid and causing lock-up operation.

3. STOP LIGHT SW CIRCUIT

If the brake pedal is depressed (Stop light SW on) when driving in lock-up condition, a signal is input to TERMINAL STP of the engine control module, the engine control module operates and continuity to the lock-up solenoid is cut.

4. OVERDRIVE CIRCUIT

∗ O/D main SW on
When the O/D main SW is turned on (SW point is open), a signal is input to TERMINAL ODMS of the engine control module and engine control module operation causes gear shift when the conditions for overdrive are met.

∗ O/D main SW off
When the O/D main SW is turned off (SW point is closed), a signal is input into TERMINAL ODMS of the engine control module, and turns on the O/D off indicator light. This activates the ECU, and the transmission system is controlled not to shift to overdrive.

SERVICE HINTS

E4 (A), E5 (B), E6 (C), E7 (D), E8 (E) ENGINE CONTROL MODULE

S1,S2-E1 : **9.0**- **14.0** volts with the electronically controlled transmission solenoid on
0- **1.5** volts with the electronically controlled transmission solenoid off
L-E1 : **7.5**- **14.0** volts with the ignition SW on and shift lever at **L** position
2-E1 : **7.5**- **14.0** volts with the ignition SW on and shift lever at **2** position
R-E1 : **7.5**- **14.0** volts with the ignition SW on and shift lever at **R** position
STP-E1 : **9.0**- **14.0** volts with the ignition SW on and brake pedal depressed
THW-E2 : **0.2**- **1.0** volts with the engine idling and the engine coolant temp. **80**˚C (**176**˚F)
VTA1-E2 : **0.3**- **0.8** volts with the ignition SW on and throttle valve fully closed
3.2- **4.9** volts with the ignition SW on and throttle valve fully open
VC-E2 : **4.5**- **5.5** volts with the ignition SW at **ON** position
OD1-E1 : **4.5**- **5.5** volts with the ignition SW at **ON** position
OD2-E1 : **9.0**- **14.0** volts with the ignition SW on and O/D main SW off
0- **3.0** volts with the ignition SW on and O/D main SW on
+B-E1 : **9.0**- **14.0** volts with the ignition SW at **ON** position

E1 ELECTRONICALLY CONTROLLED TRANSMISSION SOLENOID

2, 3, 6-GROUND : Each **11**- **15** Ω

O3 (A), (B) O/D MAIN SW

(A) 2-(A) 4 : Closed with the O/D main SW off, open with the O/D main SW on (Floor shift)
(B) 3-(B) 1 : Closed with the O/D main SW off, open with the O/D main SW on (Column shift)

ELECTRONICALLY CONTROLLED TRANSMISSION AND A/T INDICATOR

: PARTS LOCATION

Code		See Page
B4		46 (Column Shift)
		48 (Floor Shift)
C9		46 (Column Shift)
		48 (Floor Shift)
C15		46 (Column Shift)
		48 (Floor Shift)
D6		46 (Column Shift)
E1		44
E2		44
E4	A	46 (Column Shift)
		48 (Floor Shift)
E5	B	46 (Column Shift)
		48 (Floor Shift)
E6	C	46 (Column Shift)

Code		See Page
E6	C	48 (Floor Shift)
E7	D	46 (Column Shift)
		48 (Floor Shift)
E8	E	46 (Column Shift)
		48 (Floor Shift)
F6	A	44
F7	B	44
I15		47 (Column Shift)
		49 (Floor Shift)
J5		47 (Column Shift)
		49 (Floor Shift)
J7		47 (Column Shift)
		49 (Floor Shift)
J8		47 (Column Shift)

Code		See Page
J8		49 (Floor Shift)
J9		47 (Column Shift)
		49 (Floor Shift)
O1		45
O3	A	47 (Column Shift)
		49 (Floor Shift)
	B	47 (Column Shift)
		49 (Floor Shift)
P1		45
S4		47 (Column Shift)
		49 (Floor Shift)
T3		45

: JUNCTION BLOCK AND WIRE HARNESS CONNECTOR

Code	See Page	Junction Block and Wire Harness (Connector Location)
1B	27	Cowl Wire and Driver Side J/B (Lower Finish Panel)
1C		
1D		
2B	30	Engine Wire and Engine Room J/B (Engine Compartment Left)
2C	30	Engine Room Main Wire and Engine Room J/B (Engine Compartment Left)
2F		
2G	30	Engine Wire and Engine Room J/B (Engine Compartment Left)
3A	34	Cowl Wire and J/B No.3 (Left Kick Panel)
3B		
3C		
3D		
3F	35	Instrument Panel Wire and J/B No.3 (Left Kick Panel)
3G		
3H	35	Cowl Wire and J/B No.3 (Left Kick Panel)
4A	38	Cowl Wire and J/B No.4 (Right Kick Panel)
4B		
4C		
4D		
4F	39	Instrument Panel Wire and J/B No.4 (Right Kick Panel)

: CONNECTOR JOINING WIRE HARNESS AND WIRE HARNESS

Code	See Page	Joining Wire Harness and Wire Harness (Connector Location)
IC1	56 (Column Shift)	Cowl Wire and Instrument Panel Wire (Left Kick Panel)
	60 (Floor Shift)	
IF1	56 (Column Shift)	Engine Room Main Wire and Cowl Wire (Left Side of Instrument Panel)
	60 (Floor Shift)	
II1	58 (Column Shift)	Engine Wire and Cowl Wire (Behind the Glove Box)
	62 (Floor Shift)	
II2	58 (Column Shift)	
	62 (Floor Shift)	



: GROUND POINTS

Code	See Page	Ground Points Location
EB	54	Surge Tank RH
EC	54	Rear Side of Surge Tank
ED	54	Front Side of Left Fender
IG	56 (Column Shift)	Cowl Side Panel LH
	60 (Floor Shift)	
IJ	56 (Column Shift)	Cowl Side Panel RH
	60 (Floor Shift)	



: SPLICE POINTS

Code	See Page	Wire Harness with Splice Points	Code	See Page	Wire Harness with Splice Points
E2	54	Engine Wire	I23	58 (Column Shift)	Engine Wire
I22	58 (Column Shift)			62 (Floor Shift)	
	62 (Floor Shift)				

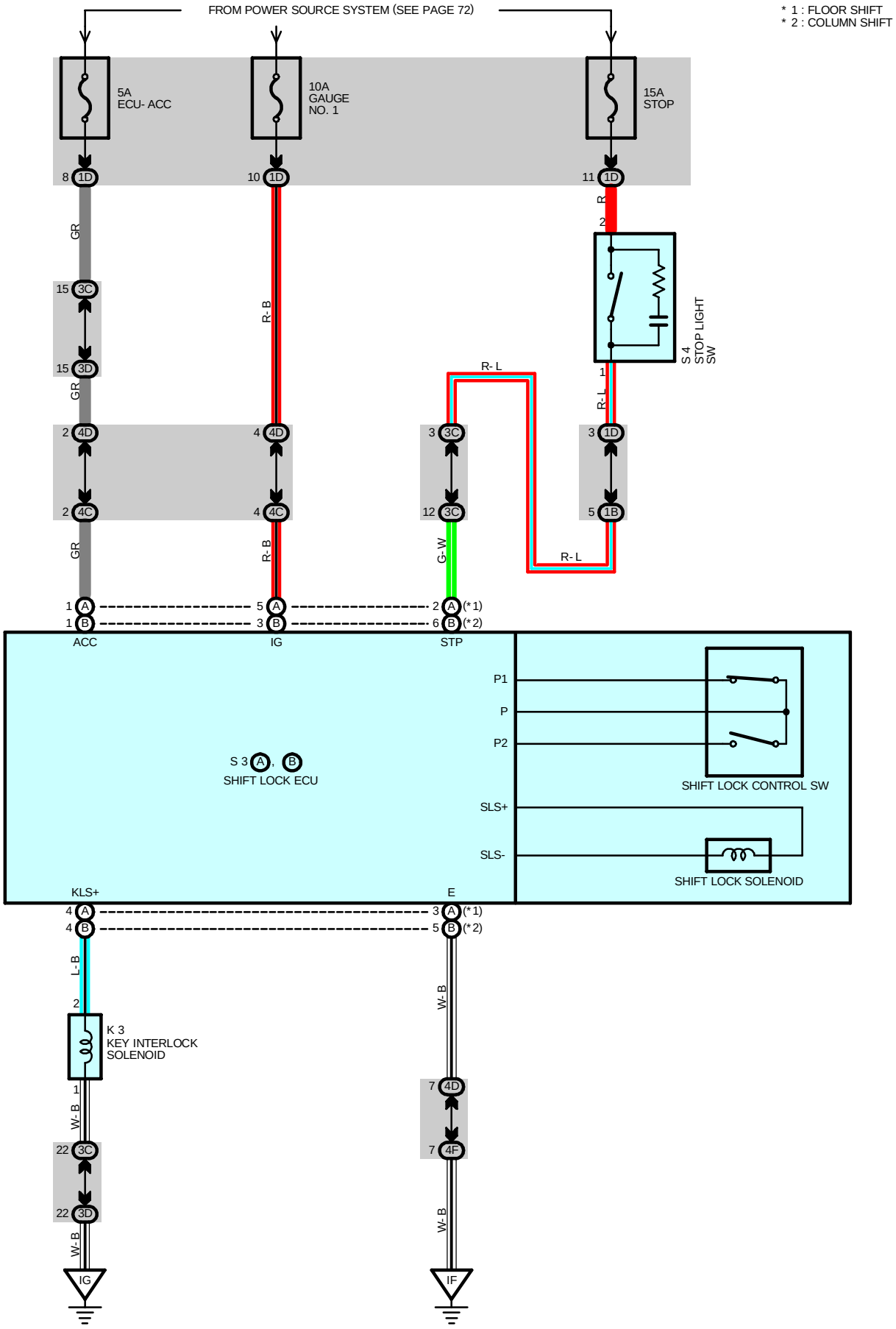
FROM POWER SOURCE SYSTEM (SEE PAGE 72)
* 1 : FLOOR SHIFT
* 2 : COLUMN SHIFT
5A
ECU- ACC
10A
GAUGE
NO. 1
15A
STOP
8 1D
10 1D
11 1D
GR
R-B
R
R-L
15 3C
15 3D
2 4D
2 4C
4 4D
4 4C
3 3C
12 3C
3 1D
5 1B
S 4
STOP LIGHT
SW
G-W
R-L
1 A
1 B
5 A
3 B
2 A (*1)
6 B (*2)
ACC
IG
STP
S 3 A, B
SHIFT LOCK ECU
P1
P
P2
SHIFT LOCK CONTROL SW
SLS+
SLS-
SHIFT LOCK SOLENOID
KLS+
E
4 A
4 B
3 A (*1)
5 B (*2)
L-B
W-B
2
K 3
KEY INTERLOCK
SOLENOID
1
22 3C
22 3D
7 4D
7 4F
IG
IF

SYSTEM OUTLINE

When the ignition SW is at ACC position, the current flows from ECU-ACC fuse to shift lock ECU TERMINAL ACC, and at ON position, the current flows from GAUGE NO.1 fuse to shift lock ECU TERMINAL 3.

1. SHIFT LOCK MECHANISM

When the signals that the brake pedal is depressed (Stop light SW ON) and the shift lever is placed in P position is input into the shift lock ECU while the ignition SW is ON, the shift lock ECU is activated and the current flows from shift lock ECU TERMINAL IG to shift lock ECU TERMINAL SLS+ to shift lock solenoid to shift lock ECU TERMINAL SLS- to shift lock ECU TERMINAL E to GROUND.
As a result, the shift lock solenoid is turned on and (Plate stopper is released) the shift lever can be placed in a position other than P position.

2. KEY INTERLOCK MECHANISM

When the shift lever is placed to P position with the ignition SW ON or at ACC position, the current from shift lock ECU TERMINAL KLS+ to key interlock solenoid is cut off. As a result, the key interlock solenoid is turned off (The lock lever is released from lock position) and the ignition key can be placed to LOCK position from ACC.

SERVICE HINTS

S3 (A) SHIFT LOCK ECU (FLOOR SHIFT)

(A) 1-GROUND : Approx. **12** volts with the ignition SW at **ACC** or **ON** position
(A) 5-GROUND : Approx. **12** volts with the ignition SW at **ON** position
(A) 3-GROUND : Always continuity
(A) 2-GROUND : Approx. **12** volts with the brake pedal depressed

S3 (B) SHIFT LOCK ECU (COLUMN SHIFT)

(B) 1-GROUND : Approx. **12** volts with the ignition SW at **ACC** or **ON** position
(B) 3-GROUND : Approx. **12** volts with the ignition SW at **ON** position
(B) 5-GROUND : Always continuity
(B) 6-GROUND : Approx. **12** volts with the brake pedal depressed

S4 STOP LIGHT SW

2-1 : Closed with the brake pedal depressed

: PARTS LOCATION

Code		See Page	Code		See Page	Code	See Page
K3		47 (Column Shift)	S3	A	49 (Floor Shift)	S4	47 (Column Shift)
		49 (Floor Shift)		B	47 (Column Shift)		49 (Floor Shift)
S3	A	47 (Column Shift)			49 (Floor Shift)		

: JUNCTION BLOCK AND WIRE HARNESS CONNECTOR

Code	See Page	Junction Block and Wire Harness (Connector Location)
1B	27	Cowl Wire and Driver Side J/B (Lower Finish Panel)
1D		
3C	34	Cowl Wire and J/B No.3 (Left Kick Panel)
3D		
4C	38	Cowl Wire and J/B No.4 (Right Kick Panel)
4D		
4F	39	Instrument Panel Wire and J/B No.4 (Right Kick Panel)

: GROUND POINTS

Code	See Page	Ground Points Location
IF	56 (Column Shift)	Left Kick Panel
	60 (Floor Shift)	
IG	56 (Column Shift)	Cowl Side Panel LH
	60 (Floor Shift)	

POWER SEAT (w/ DRIVING POSITION MEMORY)

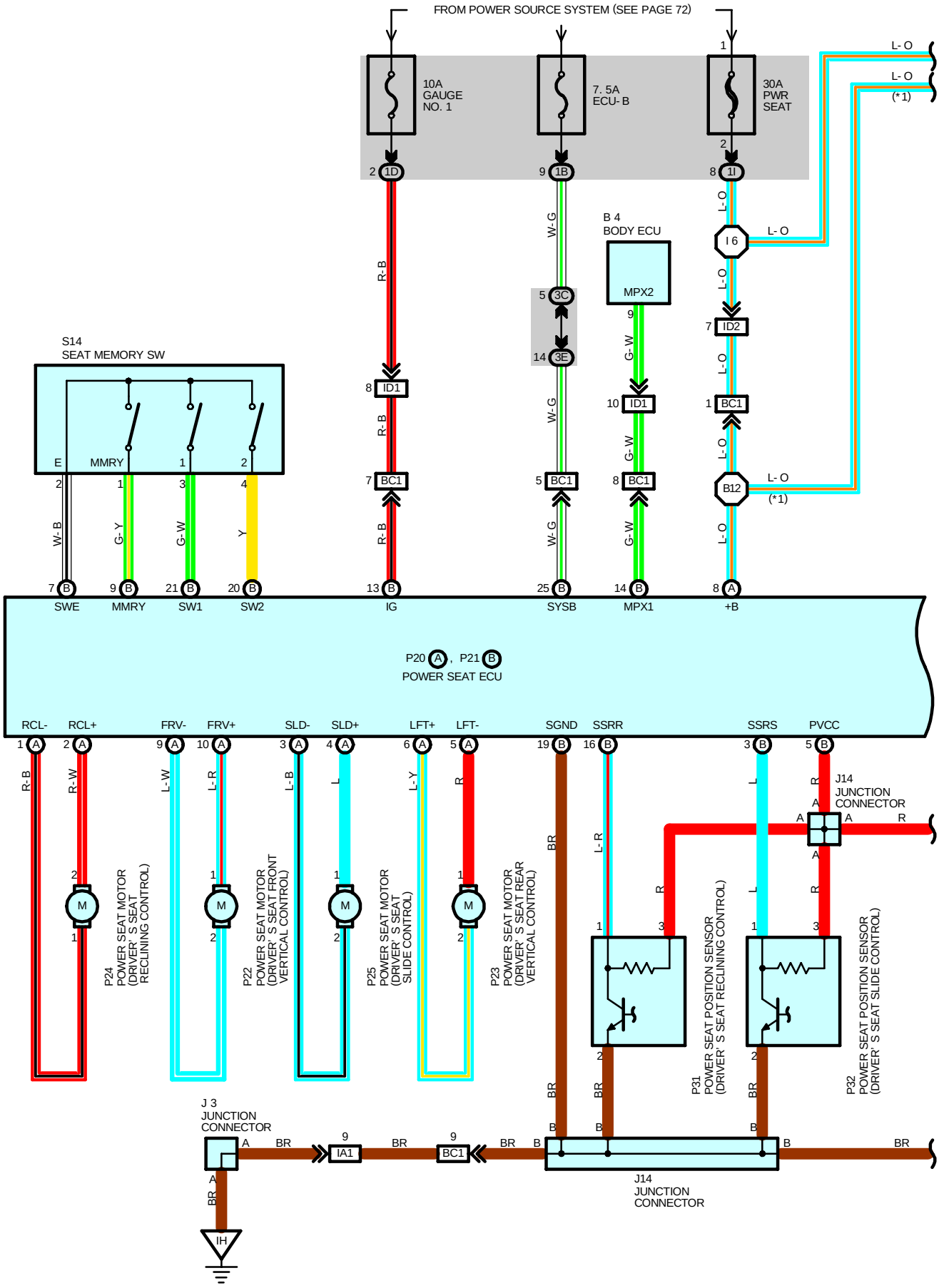

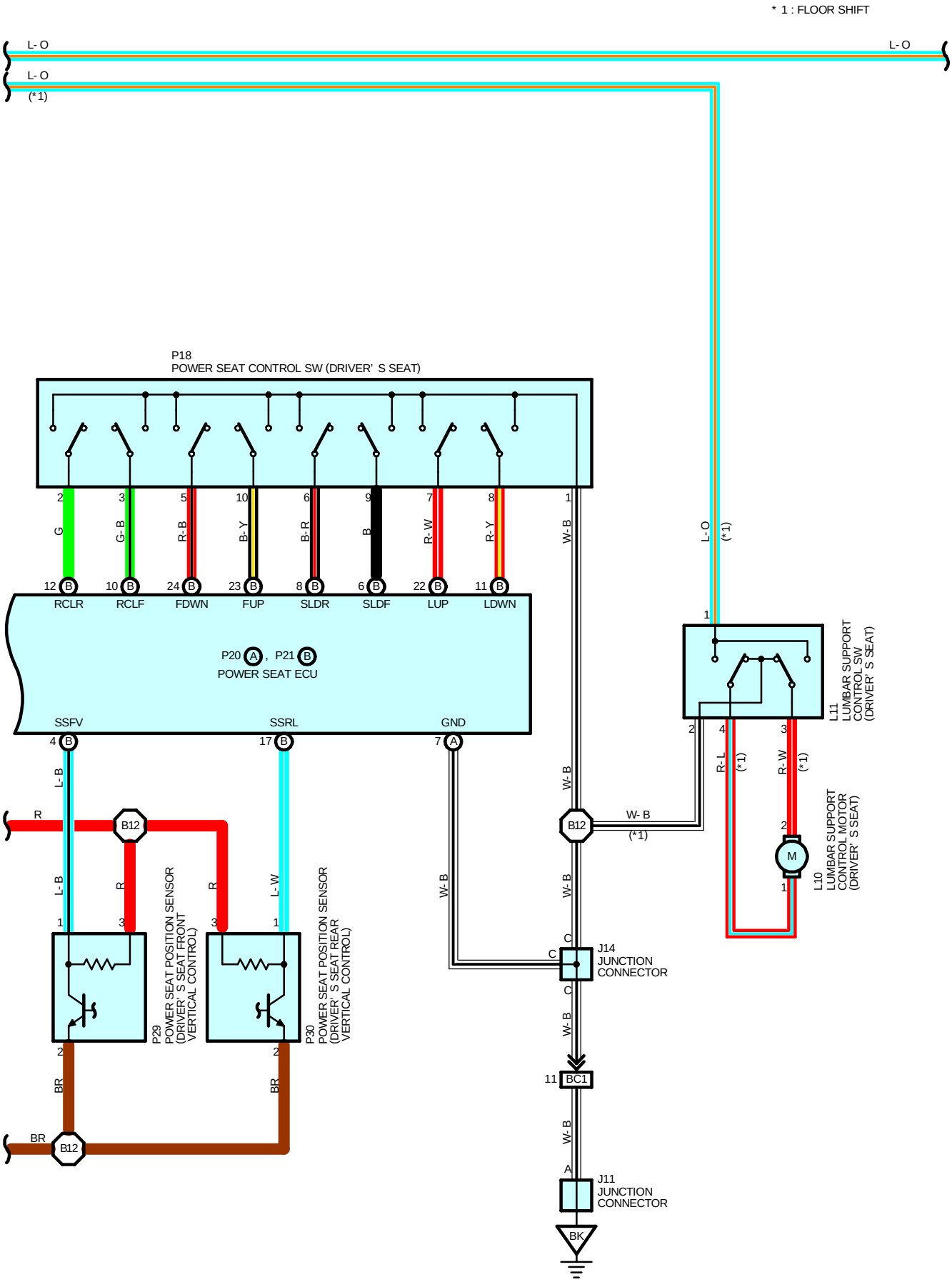
* 1 : FLOOR SHIFT
L- O
L- O
L- O
(*1)
P18
POWER SEAT CONTROL SW (DRIVER' S SEAT)
2 G 12 B RCLR
3 G- B 10 B RCLF
5 R- B 24 B FDWN
10 B- Y 23 B FUP
6 B- R 8 B SLDR
9 B 6 B SLDF
7 R- W 22 B LUP
8 R- Y 11 B LDWN
1 W- B
L- O (*1)
P20 A , P21 B
POWER SEAT ECU
SSFV
SSRL
GND
4 B
17 B
7 A
L- B
R
B12
L- B
R
R
L- W
1
3
3
1
P29
POWER SEAT POSITION SENSOR
(DRIVER' S SEAT FRONT
VERTICAL CONTROL)
P30
POWER SEAT POSITION SENSOR
(DRIVER' S SEAT REAR
VERTICAL CONTROL)
2
2
BR
BR
B12
W- B
W- B
W- B
B12
W- B
(*1)
W- B
C
C
J14
JUNCTION
CONNECTOR
C
W- B
11 BC1
W- B
A
J11
JUNCTION
CONNECTOR
BK
1
2
4
3
R- L
(*1)
R- W
(*1)
L11
LUMBAR SUPPORT
CONTROL SW
(DRIVER' S SEAT)
2
M
1
L10
LUMBAR SUPPORT
CONTROL MOTOR
(DRIVER' S SEAT)

POWER SEAT (w/ DRIVING POSITION MEMORY)

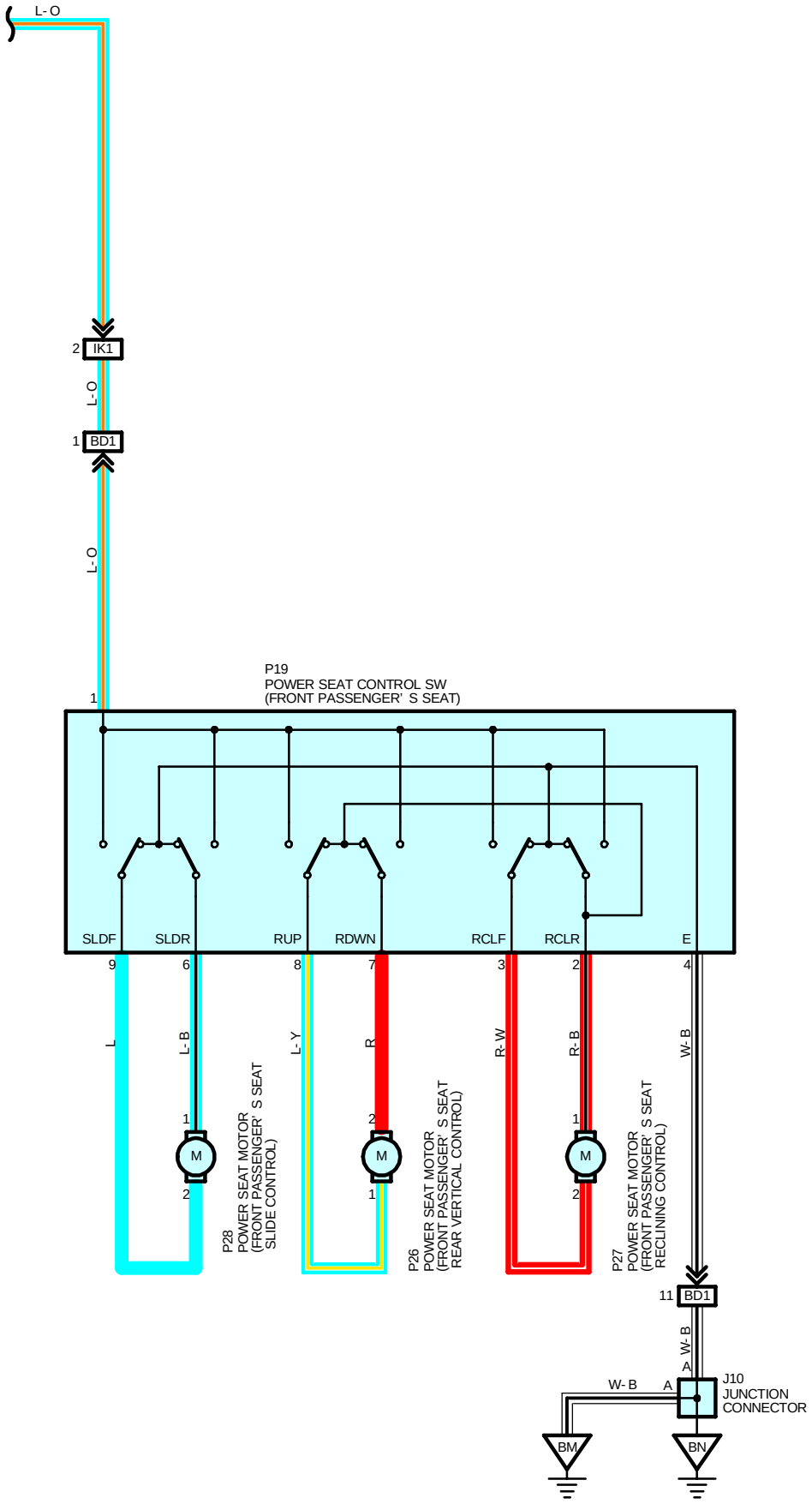

SERVICE HINTS

P20 (A), P21 (B) POWER SEAT ECU

(B)13-GROUND : Approx. **12** volts with the ignition SW at **ON** position
(B) 6-GROUND : Approx. **12** volts with the driver's seat at front slide operation
(B) 8-GROUND : Approx. **12** volts with the driver's seat at rear slide operation
(B)11-GROUND : Approx. **12** volts with the driver's seat at rear vertical down operation
(B)22-GROUND : Approx. **12** volts with the driver's seat at rear vertical up operation
(B)24-GROUND : Approx. **12** volts with the driver's seat at front vertical down operation
(B)23-GROUND : Approx. **12** volts with the driver's seat at front vertical up operation
(B)10-GROUND : Approx. **12** volts with the driver's seat at front reclining operation
(B)12-GROUND : Approx. **12** volts with the driver's seat at rear reclining operation

P18 POWER SEAT CONTROL SW (DRIVER'S SEAT)

3-1 : Closed with the driver's seat at front reclining operation
2-1 : Closed with the driver's seat at rear reclining operation
5-1 : Closed with the driver's seat at front vertical down operation
10-1 : Closed with the driver's seat at front vertical up operation
8-1 : Closed with the driver's seat at rear vertical down operation
7-1 : Closed with the driver's seat at rear vertical up operation
9-1 : Closed with the driver's seat at front slide operation
6-1 : Closed with the driver's seat at rear slide operation

: PARTS LOCATION

Code	See Page	Code	See Page	Code	See Page
B4	46 (Column Shift)	P20 A	52 (Column Shift)	P27	52 (Column Shift)
	48 (Floor Shift)		53 (Floor Shift)		53 (Floor Shift)
J3	47 (Column Shift)	P21 B	52 (Column Shift)	P28	52 (Column Shift)
	49 (Floor Shift)		53 (Floor Shift)		53 (Floor Shift)
J10	50	P22	52 (Column Shift)	P29	52 (Column Shift)
J11	50		53 (Floor Shift)		53 (Floor Shift)
J14	52 (Column Shift)	P23	52 (Column Shift)	P30	52 (Column Shift)
	53 (Floor Shift)		53 (Floor Shift)		53 (Floor Shift)
L10	53 (Floor Shift)	P24	52 (Column Shift)	P31	52 (Column Shift)
L11	53 (Floor Shift)		53 (Floor Shift)		53 (Floor Shift)
P18	52 (Column Shift)	P25	52 (Column Shift)	P32	52 (Column Shift)
	53 (Floor Shift)		53 (Floor Shift)		53 (Floor Shift)
P19	52 (Column Shift)	P26	52 (Column Shift)	S14	52 (Column Shift)
	53 (Floor Shift)		53 (Floor Shift)		53 (Floor Shift)

: JUNCTION BLOCK AND WIRE HARNESS CONNECTOR

Code	See Page	Junction Block and Wire Harness (Connector Location)
1B	27	Cowl Wire and Driver Side J/B (Lower Finish Panel)
1D		
1I		
3C	34	Cowl Wire and J/B No.3 (Left Kick Panel)
3E	35	Floor No.1 Wire and J/B No.3 (Left Kick Panel)

POWER SEAT (w/ DRIVING POSITION MEMORY)

: CONNECTOR JOINING WIRE HARNESS AND WIRE HARNESS

Code	See Page	Joining Wire Harness and Wire Harness (Connector Location)
IA1	56 (Column Shift) 60 (Floor Shift)	Floor No.1 Wire and Instrument Panel Wire (Left Kick Panel)
ID1	56 (Column Shift) 60 (Floor Shift)	Floor No.1 Wire and Cowl Wire (Left Kick Panel)
ID2	56 (Column Shift) 60 (Floor Shift)	
IK1	58 (Column Shift) 62 (Floor Shift)	Floor No.2 Wire and Cowl Wire (Right Kick Panel)
BC1	66 (Column Shift) 68 (Floor Shift)	Floor No.1 Wire and Seat No.1 Wire (Under the Driver's Seat)
BD1	66 (Column Shift) 68 (Floor Shift)	Floor No.2 Wire and Seat No.2 Wire (Under the Front Passenger's Seat)

: GROUND POINTS

Code	See Page	Ground Points Location
IH	56 (Column Shift) 60 (Floor Shift)	Instrument Panel Brace RH
BK	64	Rear Quarter Inner LH
BM	64	Back Panel Center
BN	64	Rear Quarter Inner RH

: SPLICE POINTS

Code	See Page	Wire Harness with Splice Points	Code	See Page	Wire Harness with Splice Points
I6	58 (Column Shift) 62 (Floor Shift)	Cowl Wire	B12	66 (Column Shift) 68 (Floor Shift)	Seat No.1 Wire

POWER SEAT (w/o DRIVING POSITION MEMORY)

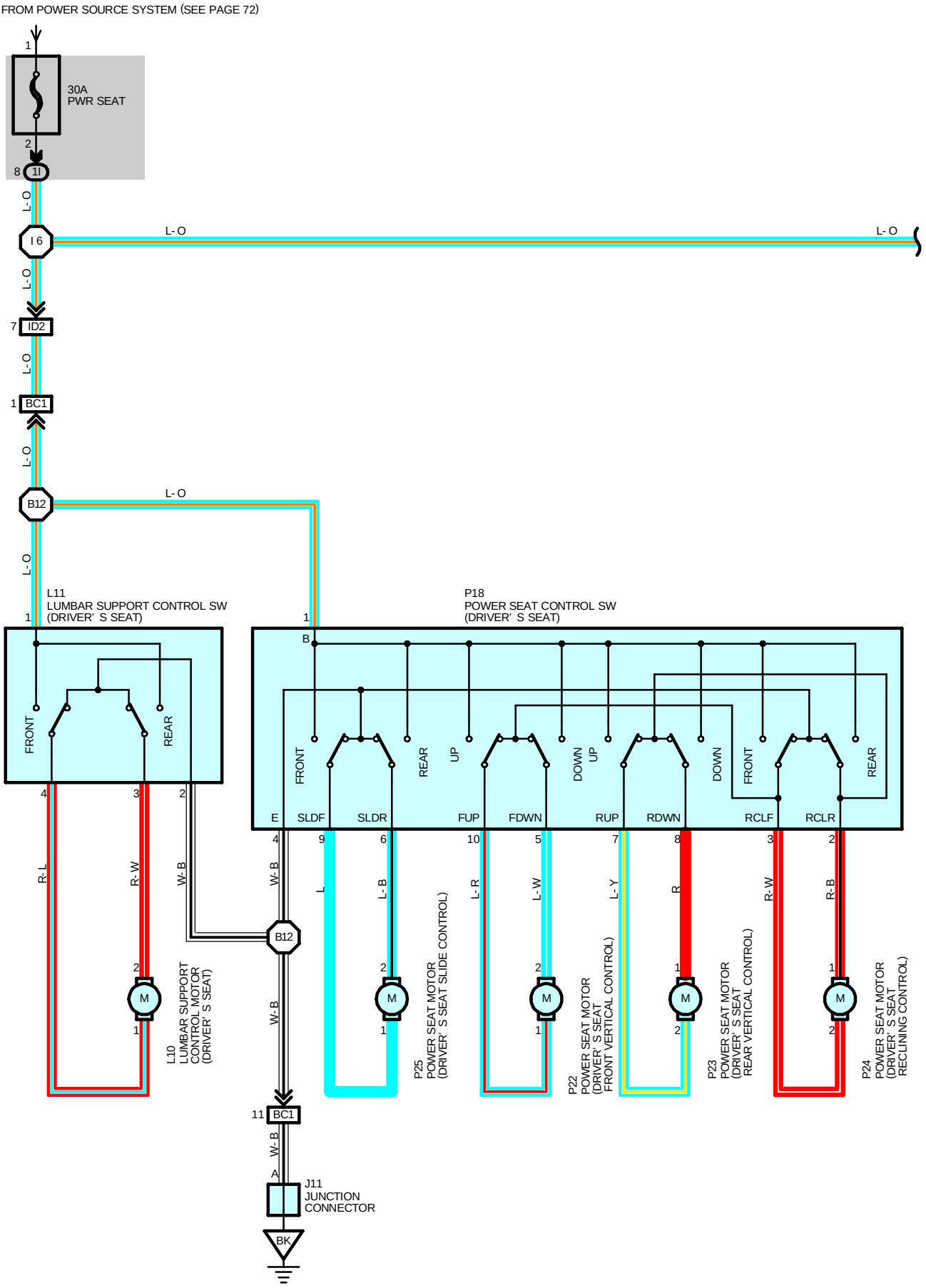

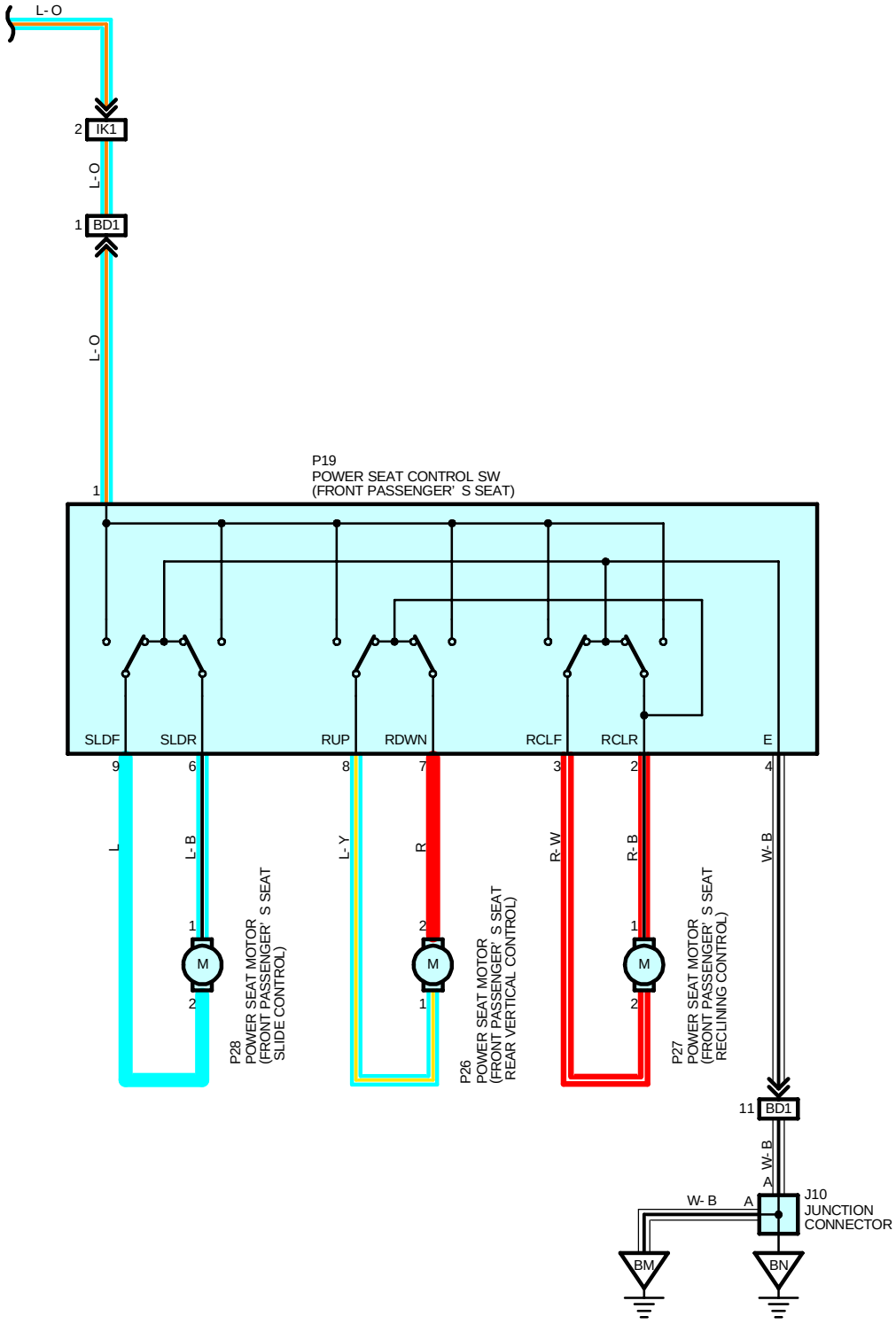
L- O
2
IK1
L- O
1
BD1
L- O
1
P19
POWER SEAT CONTROL SW
(FRONT PASSENGER' S SEAT)
SLDF
SLDR
RUP
RDWN
RCLF
RCLR
E
9
6
8
7
3
2
4
L
L- B
L- Y
R
R- W
R- B
W- B
1
2
M
2
1
P28
POWER SEAT MOTOR
(FRONT PASSENGER' S SEAT
SLIDE CONTROL)
P26
POWER SEAT MOTOR
(FRONT PASSENGER' S SEAT
REAR VERTICAL CONTROL)
P27
POWER SEAT MOTOR
(FRONT PASSENGER' S SEAT
RECLINING CONTROL)
11
BD1
W- B
A
W- B
A
J10
JUNCTION
CONNECTOR
BM
BN

POWER SEAT (w/o DRIVING POSITION MEMORY)

SERVICE HINTS

P19 POWER SEAT CONTROL SW (DRIVER'S SEAT)

1-GROUND : Always approx. **12** volts
4-GROUND : Always continuity

P18 POWER SEAT CONTROL SW (FRONT PASSENGER'S SEAT)

1-GROUND : Always approx. **12** volts
4-GROUND : Always continuity

: PARTS LOCATION

Code	See Page	Code	See Page	Code	See Page
J10	50	P22	52 (Column Shift)	P26	52 (Column Shift)
J11	50		53 (Floor Shift)		53 (Floor Shift)
L10	53 (Floor Shift)	P23	52 (Column Shift)	P27	52 (Column Shift)
L11	53 (Floor Shift)		53 (Floor Shift)		53 (Floor Shift)
P18	52 (Column Shift)	P24	52 (Column Shift)	P28	52 (Column Shift)
	53 (Floor Shift)		53 (Floor Shift)		53 (Floor Shift)
P19	52 (Column Shift)	P25	52 (Column Shift)		
	53 (Floor Shift)		53 (Floor Shift)		

: JUNCTION BLOCK AND WIRE HARNESS CONNECTOR

Code	See Page	Junction Block and Wire Harness (Connector Location)
1I	27	Cowl Wire and Driver Side J/B (Lower Finish Panel)

: CONNECTOR JOINING WIRE HARNESS AND WIRE HARNESS

Code	See Page	Joining Wire Harness and Wire Harness (Connector Location)
ID2	56 (Column Shift)	Floor No.1 Wire and Cowl Wire (Left Kick Panel)
	60 (Floor Shift)	
IK1	58 (Column Shift)	Floor No.2 Wire and Cowl Wire (Right Kick Panel)
	62 (Floor Shift)	
BC1	66 (Column Shift)	Floor No.1 Wire and Seat No.1 Wire (Under the Driver's Seat)
	68 (Floor Shift)	
BD1	66 (Column Shift)	Floor No.2 Wire and Seat No.2 Wire (Under the Front Passenger's Seat)
	68 (Floor Shift)	

: GROUND POINTS

Code	See Page	Ground Points Location
BK	64	Rear Quarter Inner LH
BM	64	Back Panel Center
BN	64	Rear Quarter Inner RH

: SPLICE POINTS

Code	See Page	Wire Harness with Splice Points	Code	See Page	Wire Harness with Splice Points
I6	58 (Column Shift)	Cowl Wire	B12	66 (Column Shift)	Seat No.1 Wire
	62 (Floor Shift)			68 (Floor Shift)	

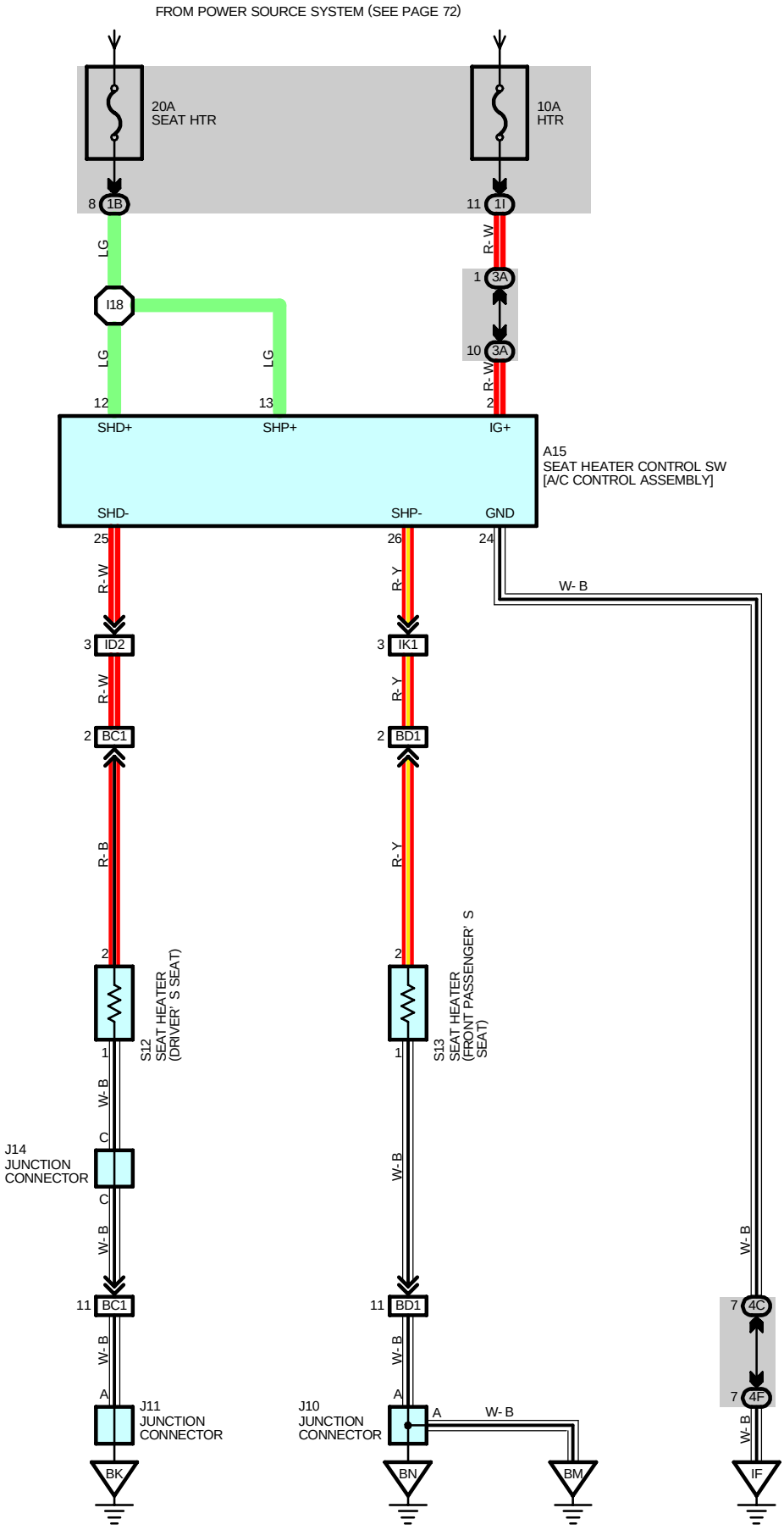
FROM POWER SOURCE SYSTEM (SEE PAGE 72)
20A
SEAT HTR
10A
HTR
8 1B
11 1I
LG
R-W
I18
1 3A
10 3A
LG
LG
R-W
12
13
2
SHD+
SHP+
IG+
A15
SEAT HEATER CONTROL SW
[A/C CONTROL ASSEMBLY]
SHD-
SHP-
GND
25
26
24
R-W
R-Y
W-B
3 ID2
3 IK1
R-W
R-Y
2 BC1
2 BD1
R-B
R-Y
2
2
S12
SEAT HEATER
(DRIVER' S SEAT)
S13
SEAT HEATER
(FRONT PASSENGER' S SEAT)
1
1
W-B
W-B
J14
JUNCTION
CONNECTOR
C
C
W-B
W-B
11 BC1
11 BD1
7 4C
W-B
W-B
W-B
A
A
7 4F
J11
JUNCTION
CONNECTOR
J10
JUNCTION
CONNECTOR
A
W-B
W-B
BK
BN
BM
IF

SERVICE HINTS

A15 SEAT HEATER CONTROL SW [A/C CONTROL ASSEMBLY]

2-GROUND : Approx. **12** volts with the ignition SW at **ON** position
12, 13-GROUND : Always approx. **12** volts
24-GROUND : Always continuity

: PARTS LOCATION

Code	See Page	Code	See Page	Code	See Page
A15	46 (Column Shift)	J14	52 (Column Shift)	S13	52 (Column Shift)
	48 (Floor Shift)		53 (Floor Shift)		53 (Floor Shift)
J10	50	S12	52 (Column Shift)		
J11	50		53 (Floor Shift)		

: JUNCTION BLOCK AND WIRE HARNESS CONNECTOR

Code	See Page	Junction Block and Wire Harness (Connector Location)
1B	27	Cowl Wire and Driver Side J/B (Lower Finish Panel)
1I		
3A	34	Cowl Wire and J/B No.3 (Left Kick Panel)
4C	38	Cowl Wire and J/B No.4 (Right Kick Panel)
4F	39	Instrument Panel Wire and J/B No.4 (Right Kick Panel)

: CONNECTOR JOINING WIRE HARNESS AND WIRE HARNESS

Code	See Page	Joining Wire Harness and Wire Harness (Connector Location)
ID2	56 (Column Shift)	Floor No.1 Wire and Cowl Wire (Left Kick Panel)
	60 (Floor Shift)	
IK1	58 (Column Shift)	Floor No.2 Wire and Cowl Wire (Right Kick Panel)
	62 (Floor Shift)	
BC1	66 (Column Shift)	Floor No.1 Wire and Seat No.1 Wire (Under the Driver's Seat)
	68 (Floor Shift)	
BD1	66 (Column Shift)	Floor No.2 Wire and Seat No.2 Wire (Under the Front Passenger's Seat)
	68 (Floor Shift)	

: GROUND POINTS

Code	See Page	Ground Points Location
IF	56 (Column Shift)	Left Kick Panel
	60 (Floor Shift)	
BK	64	Rear Quarter Inner LH
BM	64	Back Panel Center
BN	64	Rear Quarter Inner RH

: SPLICE POINTS

Code	See Page	Wire Harness with Splice Points	Code	See Page	Wire Harness with Splice Points
I18	58 (Column Shift)	Cowl Wire	I18	62 (Floor Shift)	Cowl Wire

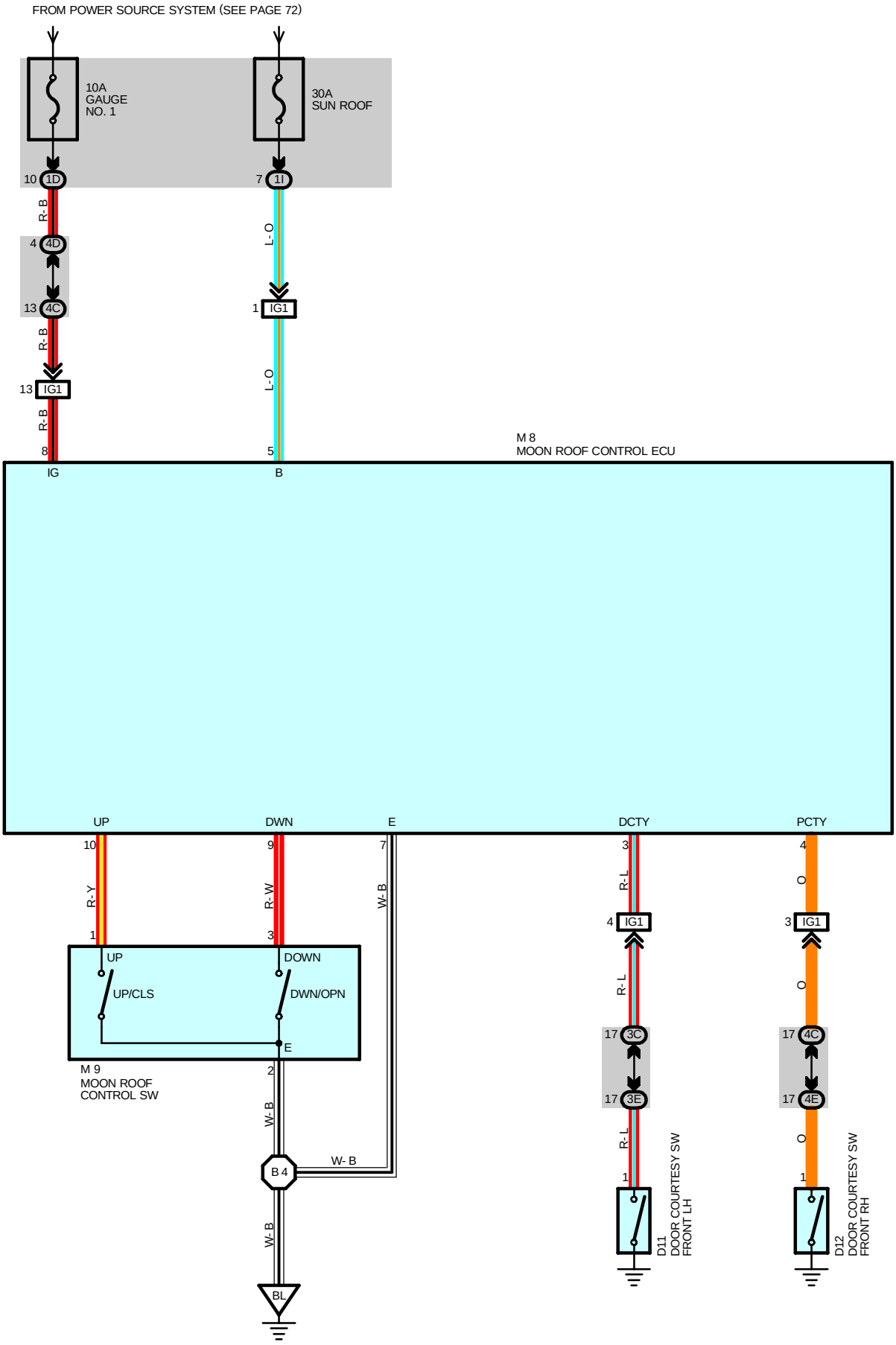
FROM POWER SOURCE SYSTEM (SEE PAGE 72)
10A
GAUGE
NO. 1
30A
SUN ROOF
10
1D
7
1I
R-B
L-O
4
4D
13
4C
1
IG1
R-B
L-O
13
IG1
R-B
8
5
IG
B
M 8
MOON ROOF CONTROL ECU
UP
DWN
E
DCTY
PCTY
10
9
7
3
4
R-Y
R-W
W-B
R-L
O
1
3
4
IG1
3
IG1
UP
DOWN
UP/CLS
DWN/OPN
E
R-L
O
M 9
MOON ROOF
CONTROL SW
17
3C
17
4C
17
3E
17
4E
2
W-B
R-L
O
W-B
B 4
1
1
D11
DOOR COURTESY SW
FRONT LH
D12
DOOR COURTESY SW
FRONT RH
W-B
BL

SERVICE HINTS

M9 MOON ROOF CONTROL SW

3-2 : Closed with the moon roof control SW at **TILT DOWN** or **OPEN** position
1-2 : Closed with the moon roof control SW at **TILT UP** or **CLOSE** position

: PARTS LOCATION

Code	See Page	Code	See Page	Code	See Page
D11	50	M8	51		
D12	50	M9	51		

: JUNCTION BLOCK AND WIRE HARNESS CONNECTOR

Code	See Page	Junction Block and Wire Harness (Connector Location)
1D	27	Cowl Wire and Driver Side J/B (Lower Finish Panel)
1I		
3C	34	Cowl Wire and J/B No.3 (Left Kick Panel)
3E	35	Floor No.1 Wire and J/B No.3 (Left Kick Panel)
4C	38	Cowl Wire and J/B No.4 (Right Kick Panel)
4D		
4E	39	Floor No.2 Wire and J/B No.4 (Right Kick Panel)

: CONNECTOR JOINING WIRE HARNESS AND WIRE HARNESS

Code	See Page	Joining Wire Harness and Wire Harness (Connector Location)
IG1	56 (Column Shift)	Roof Wire and Cowl Wire (Front Left Pillar)
	60 (Floor Shift)	

: GROUND POINTS

Code	See Page	Ground Points Location
BL	64	Roof Left

: SPLICE POINTS

Code	See Page	Wire Harness with Splice Points	Code	See Page	Wire Harness with Splice Points
B4	64	Roof Wire			

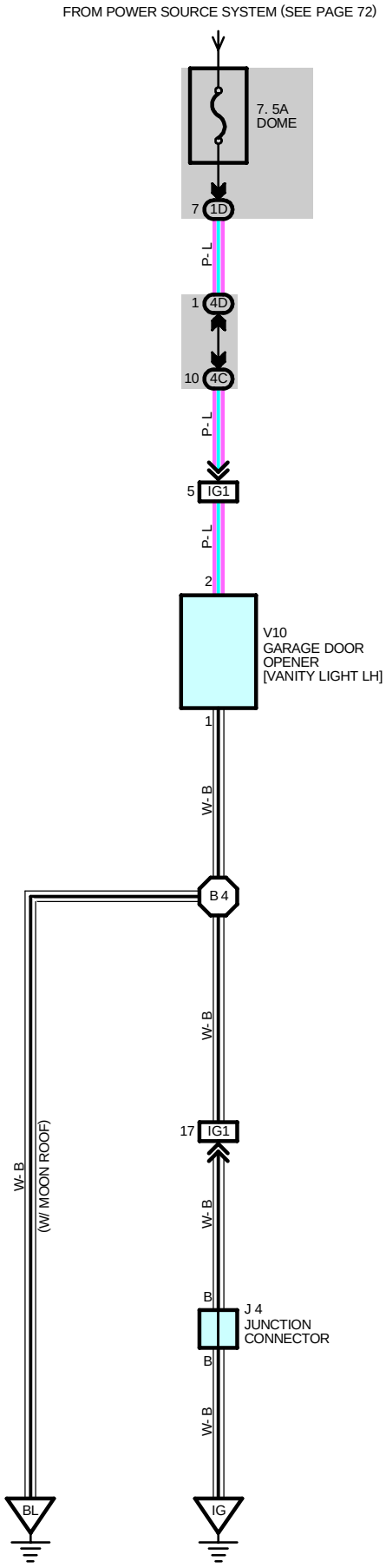
FROM POWER SOURCE SYSTEM (SEE PAGE 72)
7. 5A
DOME
7
1D
P-L
1
4D
10
4C
P-L
5
IG1
P-L
2
V10
GARAGE DOOR
OPENER
[VANITY LIGHT LH]
1
W-B
B 4
W-B
17
IG1
W-B
W-B
(W/ MOON ROOF)
B
J 4
JUNCTION
CONNECTOR
B
W-B
BL
IG

SERVICE HINTS

V10 GARAGE DOOR OPENER [VANITY LIGHT LH]

2-GROUND : Always approx. **12** volts

1-GROUND : Always continuity

: PARTS LOCATION

Code	See Page	Code	See Page	Code	See Page
J4	47 (Column Shift)	J4	49 (Floor Shift)	V10	51

: JUNCTION BLOCK AND WIRE HARNESS CONNECTOR

Code	See Page	Junction Block and Wire Harness (Connector Location)
1D	27	Cowl Wire and Driver Side J/B (Lower Finish Panel)
4C	38	Cowl Wire and J/B No.4 (Right Kick Panel)
4D		

: CONNECTOR JOINING WIRE HARNESS AND WIRE HARNESS

Code	See Page	Joining Wire Harness and Wire Harness (Connector Location)
IG1	56 (Column Shift) 60 (Floor Shift)	Roof Wire and Cowl Wire (Front Left Pillar)

: GROUND POINTS

Code	See Page	Ground Points Location
IG	56 (Column Shift) 60 (Floor Shift)	Cowl Side Panel LH
BL	64	Roof Left

: SPLICE POINTS

Code	See Page	Wire Harness with Splice Points	Code	See Page	Wire Harness with Splice Points
B4	64	Roof Wire			

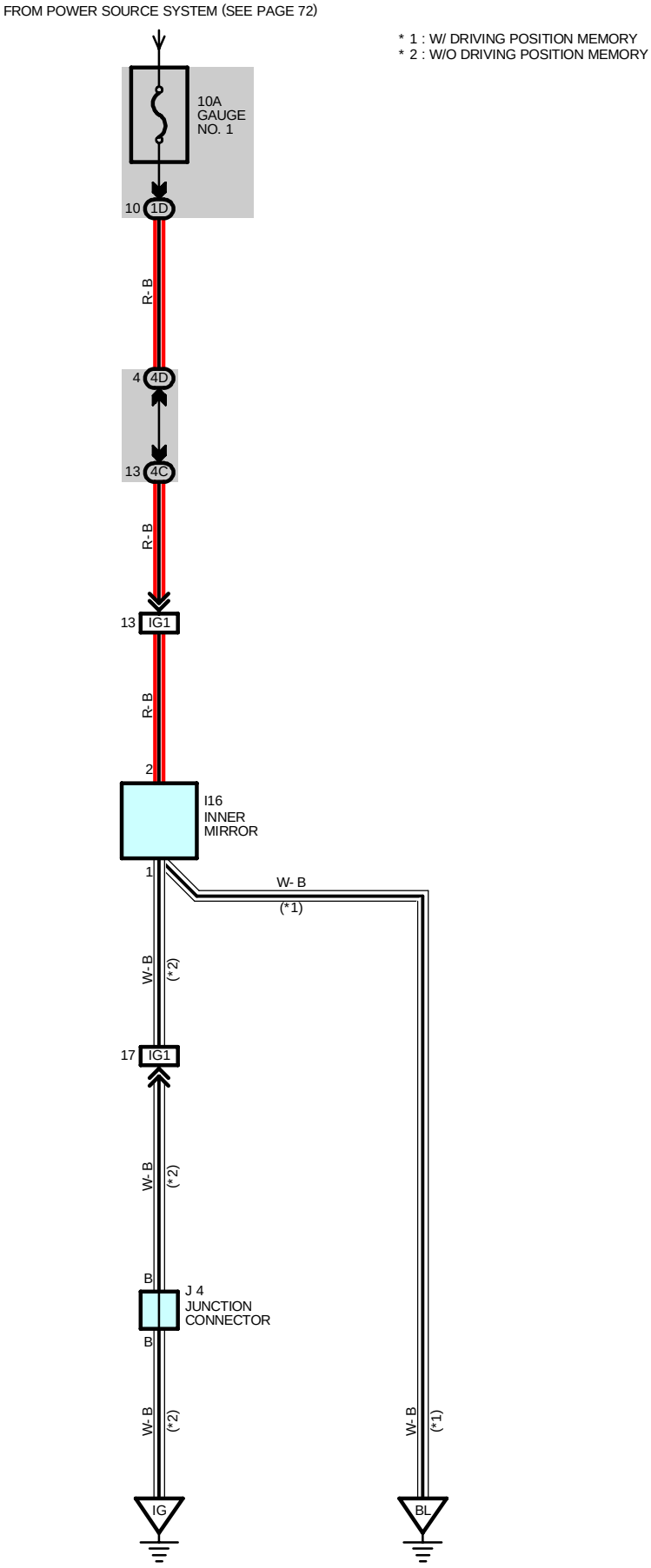
FROM POWER SOURCE SYSTEM (SEE PAGE 72)
* 1 : W/ DRIVING POSITION MEMORY
* 2 : W/O DRIVING POSITION MEMORY
10A
GAUGE
NO. 1
10
1D
R- B
4
4D
13
4C
R- B
13
IG1
R- B
2
I16
INNER
MIRROR
1
W- B
(*1)
W- B
(*2)
17
IG1
W- B
(*2)
B
J 4
JUNCTION
CONNECTOR
B
W- B
(*2)
W- B
(*1)
IG
BL

SERVICE HINTS

I16 INNER MIRROR

2-GROUND : Approx. **12** volts with the ignition SW at **ON** position
1-GROUND : Always continuity

: PARTS LOCATION

Code	See Page	Code	See Page	Code	See Page
I16	50	J4	47 (Column Shift)	J4	49 (Floor Shift)

: JUNCTION BLOCK AND WIRE HARNESS CONNECTOR

Code	See Page	Junction Block and Wire Harness (Connector Location)
1D	27	Cowl Wire and Driver Side J/B (Lower Finish Panel)
4C	38	Cowl Wire and J/B No.4 (Right Kick Panel)
4D		

: CONNECTOR JOINING WIRE HARNESS AND WIRE HARNESS

Code	See Page	Joining Wire Harness and Wire Harness (Connector Location)
IG1	56 (Column Shift)	Roof Wire and Cowl Wire (Front Left Pillar)
	60 (Floor Shift)	

: GROUND POINTS

Code	See Page	Ground Points Location
IG	56 (Column Shift)	Cowl Side Panel LH
	60 (Floor Shift)	
BL	64	Roof Left

REMOTE CONTROL MIRROR (w/ DRIVING POSITION MEMORY)

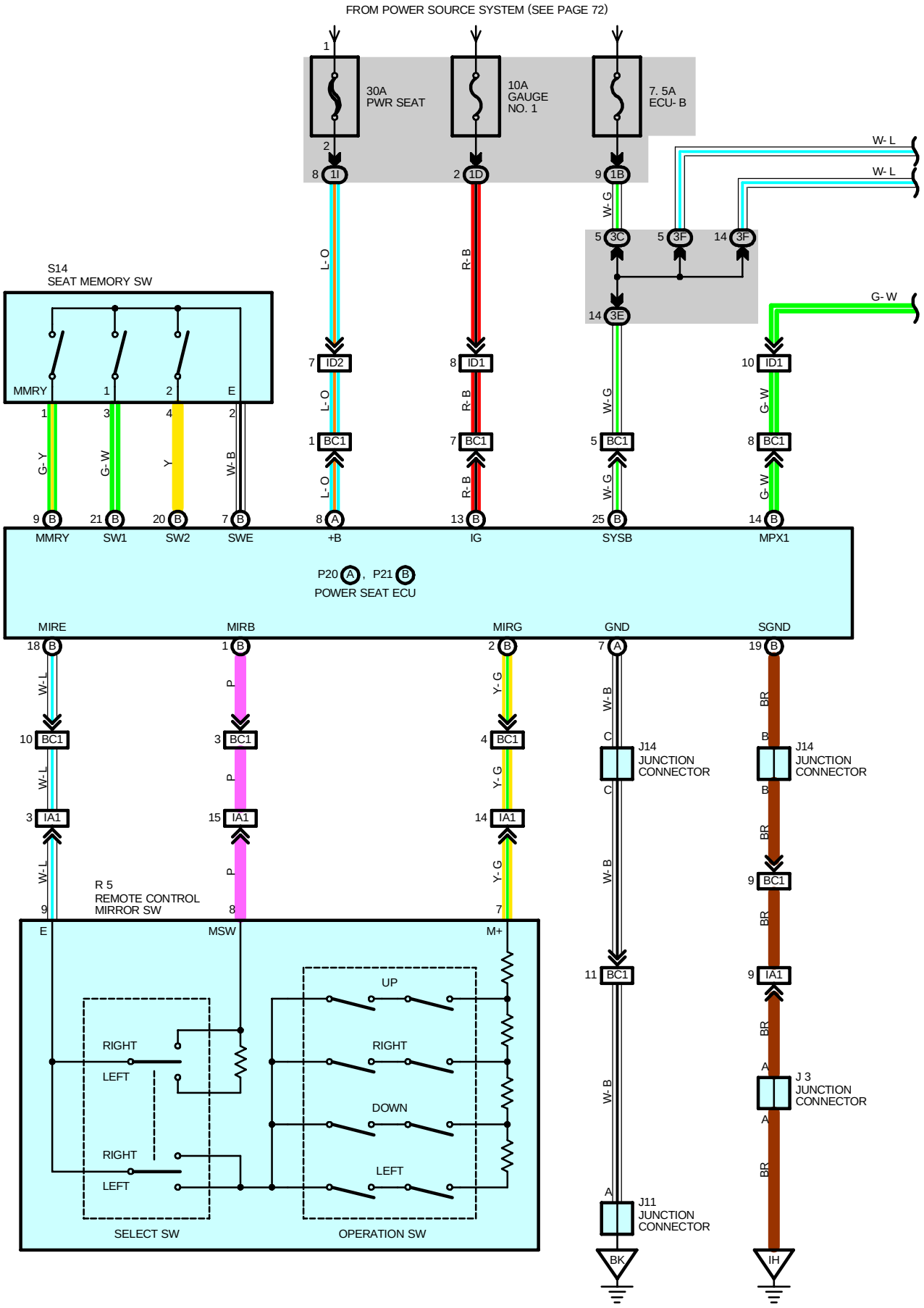

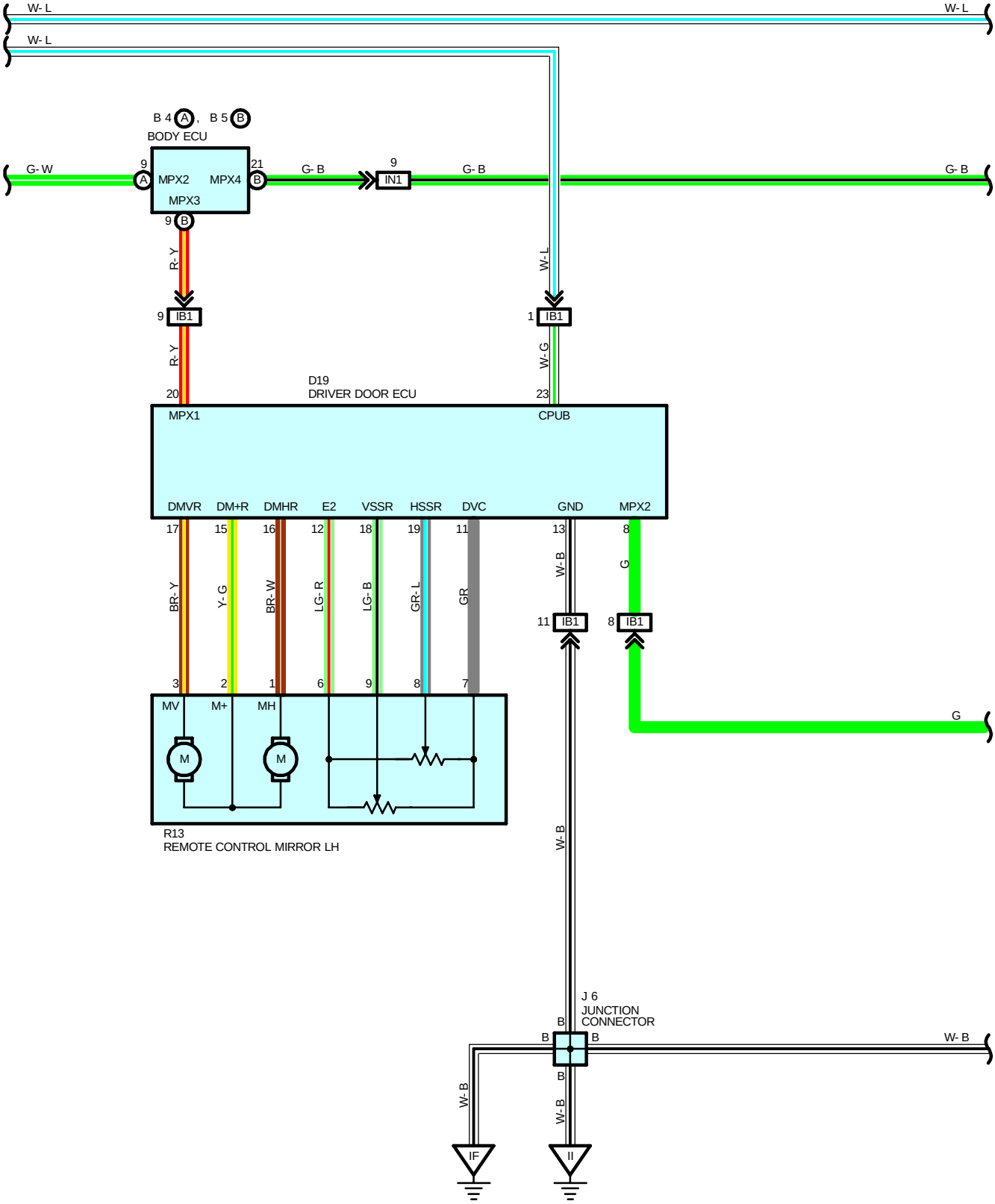
W- L
W- L
W- L
B 4 A , B 5 B
BODY ECU
G- W
9
A
MPX2
MPX3
MPX4
21
B
G- B
9
IN1
G- B
G- B
9 B
R- Y
W- L
9 IB1
1 IB1
R- Y
W- G
D19
DRIVER DOOR ECU
20
MPX1
23
CPUB
DMVR
DM+R
DMHR
E2
VSSR
HSSR
DVC
GND
MPX2
17
15
16
12
18
19
11
13
8
BR- Y
Y- G
BR- W
LG- R
LG- B
GR- L
GR
W- B
G
11 IB1
8 IB1
3
2
1
6
9
8
7
MV
M+
MH
M
M
G
R13
REMOTE CONTROL MIRROR LH
W- B
J 6
JUNCTION
CONNECTOR
B
B
B
W- B
B
W- B
W- B
IF
II

REMOTE CONTROL MIRROR (w/ DRIVING POSITION MEMORY)

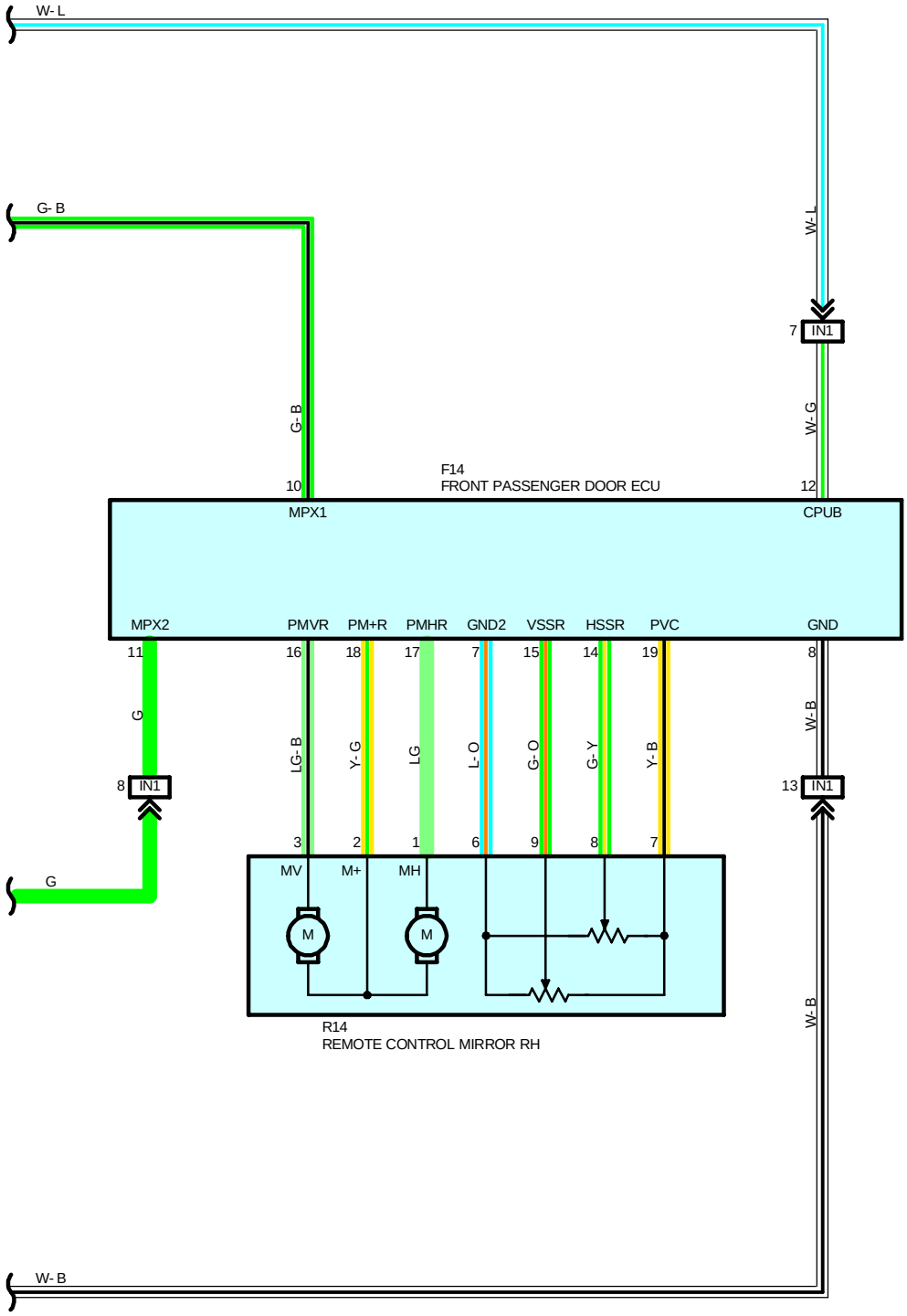

SERVICE HINTS

R4 REMOTE CONTROL MIRROR SW

7-9 : Approx. **800** Ω with select SW at **RH** position and operation SW at **LEFT** position
7-9 : Approx. **250** Ω with select SW at **RH** position and operation SW at **RIGHT** position
7-9 : Approx. **100** Ω with select SW at **RH** position and operation SW at **UP** position
7-9 : Approx. **470** Ω with select SW at **RH** position and operation SW at **DOWN** position
7-9 : Approx. **900** Ω with select SW at **LH** position and operation SW at **LEFT** position
7-9 : Approx. **350** Ω with select SW at **LH** position and operation SW at **RIGHT** position
7-9 : Approx. **200** Ω with select SW at **LH** position and operation SW at **UP** position
7-9 : Approx. **570** Ω with select SW at **LH** position and operation SW at **DOWN** position

○ : PARTS LOCATION

Code		See Page	Code		See Page	Code		See Page
B4	A	46 (Column Shift)	J6		47 (Column Shift)	P21	B	53 (Floor Shift)
		48 (Floor Shift)			49 (Floor Shift)	R5		47 (Column Shift)
B5	B	46 (Column Shift)	J11		50			49 (Floor Shift)
		48 (Floor Shift)	J14		52 (Column Shift)	R13		51
D19		50			53 (Floor Shift)	R14		51
F14		50	P20	A	52 (Column Shift)	S14		52 (Column Shift)
J3		47 (Column Shift)			53 (Floor Shift)			53 (Floor Shift)
		49 (Floor Shift)	P21	B	52 (Column Shift)			

⬭ : JUNCTION BLOCK AND WIRE HARNESS CONNECTOR

Code	See Page	Junction Block and Wire Harness (Connector Location)
1B	27	Cowl Wire and Driver Side J/B (Lower Finish Panel)
1D		
1I		
3C	34	Cowl Wire and J/B No.3 (Left Kick Panel)
3E	35	Floor No.1 Wire and J/B No.3 (Left Kick Panel)
3F	35	Instrument Panel Wire and J/B No.3 (Left Kick Panel)

▭ : CONNECTOR JOINING WIRE HARNESS AND WIRE HARNESS

Code	See Page	Joining Wire Harness and Wire Harness (Connector Location)
IA1	56 (Column Shift)	Floor No.1 Wire and Instrument Panel Wire (Left Kick Panel)
	60 (Floor Shift)	
IB1	56 (Column Shift)	Front Door LH Wire and Instrument Panel Wire (Left Kick Panel)
	60 (Floor Shift)	
ID1	56 (Column Shift)	Floor No.1 Wire and Cowl Wire (Left Kick Panel)
	60 (Floor Shift)	
ID2	56 (Column Shift)	
	60 (Floor Shift)	
IN1	58 (Column Shift)	Front Door RH Wire and Instrument Panel Wire (Right Kick Panel)
	62 (Floor Shift)	
BC1	66 (Column Shift)	Floor No.1 Wire and Seat No.1 Wire (Under the Driver's Seat)
	68 (Floor Shift)	

▽ : GROUND POINTS

Code	See Page	Ground Points Location
IF	56 (Column Shift)	Left Kick Panel
	60 (Floor Shift)	
IH	56 (Column Shift)	Instrument Panel Brace RH
	60 (Floor Shift)	
II	56 (Column Shift)	Right Kick Panel
	60 (Floor Shift)	
BK	64	Rear Quarter Inner LH

REMOTE CONTROL MIRROR (w/o DRIVING POSITION MEMORY)

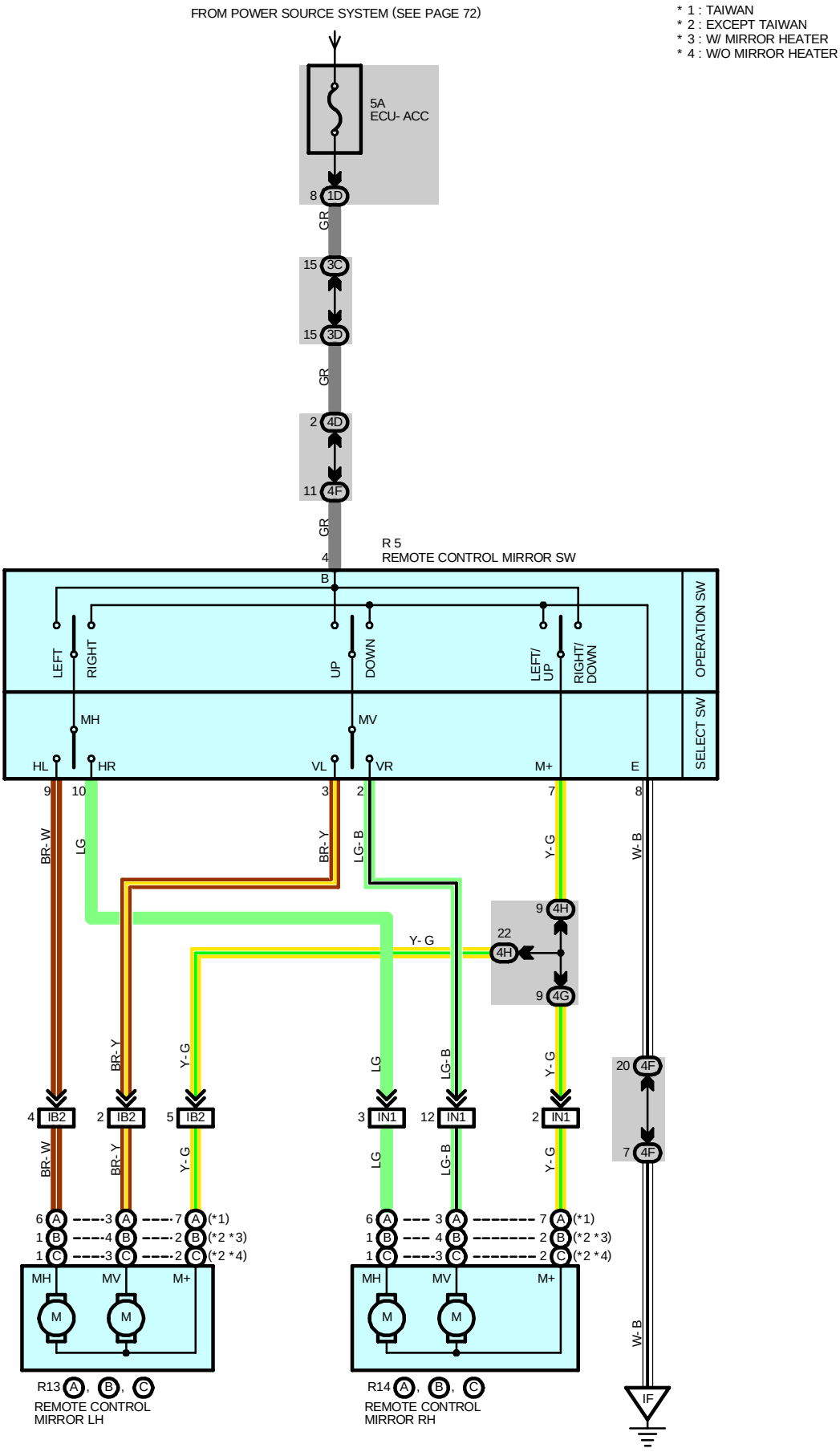

SERVICE HINTS

R5 REMOTE CONTROL MIRROR SW

7-8 : Continuity with the operation SW at **UP** or **LEFT** position
4-7 : Continuity with the operation SW at **DOWN** or **RIGHT** position
4-GROUND : Approx. **12** volts with the ignition SW at **ACC** or **ON** position

: PARTS LOCATION

Code		See Page	Code		See Page	Code		See Page
R5		47 (Column Shift)	R13	B	51	R14	B	51
		49 (Floor Shift)		C	51		C	51
R13	A	51	R14	A	51			

: JUNCTION BLOCK AND WIRE HARNESS CONNECTOR

Code	See Page	Junction Block and Wire Harness (Connector Location)
1D	27	Cowl Wire and Driver Side J/B (Lower Finish Panel)
3C	34	Cowl Wire and J/B No.3 (Left Kick Panel)
3D		
4D	38	Cowl Wire and J/B No.4 (Right Kick Panel)
4F	39	Instrument Panel Wire and J/B No.4 (Right Kick Panel)
4G		
4H		

: CONNECTOR JOINING WIRE HARNESS AND WIRE HARNESS

Code	See Page	Joining Wire Harness and Wire Harness (Connector Location)
IB2	56 (Column Shift)	Front Door LH Wire and Instrument Panel Wire (Left Kick Panel)
	60 (Floor Shift)	
IN1	58 (Column Shift)	Front Door RH Wire and Instrument Panel Wire (Right Kick Panel)
	62 (Floor Shift)	

: GROUND POINTS

Code	See Page	Ground Points Location
IF	56 (Column Shift)	Left Kick Panel
	60 (Floor Shift)	

REAR WINDOW DEFOGGER AND MIRROR HEATER

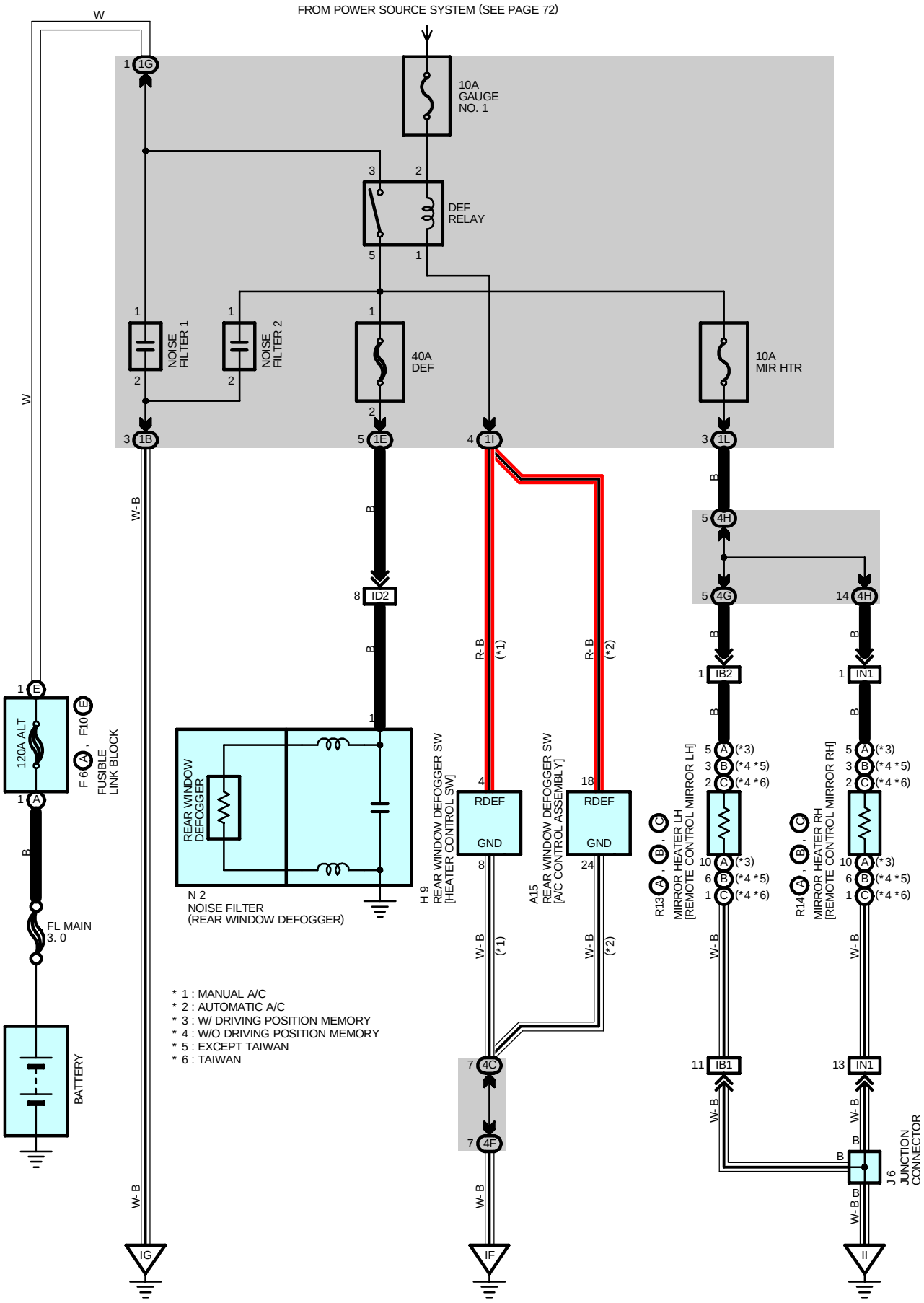

SERVICE HINTS

DEF RELAY

5-3 : Closed with the ignition SW at **ON** position and rear window defogger SW at **ON** position

A15 REAR WINDOW DEFOGGER SW [A/C CONTROL ASSEMBLY] (AUTOMATIC A/C)

18-GROUND : Continuity with the ignition SW at **ON** position and rear window defogger SW at **ON** position
24-GROUND : Always continuity

H9 REAR WINDOW DEFOGGER SW [HEATER CONTROL SW] (MANUAL A/C)

4-GROUND : Continuity with the ignition SW at **ON** position and rear window defogger SW at **ON** position
8-GROUND : Always continuity

: PARTS LOCATION

Code		See Page	Code		See Page	Code		See Page
A15		46 (Column Shift)	H9		49 (Floor Shift)	R13	B	51
		48 (Floor Shift)	J6		47 (Column Shift)		C	51
F6	A	44			49 (Floor Shift)	R14	A	51
F10	E	44	N2		51		B	51
H9		47 (Column Shift)	R13	A	51		C	51

: JUNCTION BLOCK AND WIRE HARNESS CONNECTOR

Code	See Page	Junction Block and Wire Harness (Connector Location)
1B	27	Cowl Wire and Driver Side J/B (Lower Finish Panel)
1E	and	
1G	27	Engine Room Main Wire and Driver Side J/B (Lower Finish Panel)
1I	27	Cowl Wire and Driver Side J/B (Lower Finish Panel)
1L	26	Instrument Panel Wire and Driver Side J/B (Lower Finish Panel)
4C	38	Cowl Wire and J/B No.4 (Right Kick Panel)
4F	39	Instrument Panel Wire and J/B No.4 (Right Kick Panel)
4G		
4H		

: CONNECTOR JOINING WIRE HARNESS AND WIRE HARNESS

Code	See Page	Joining Wire Harness and Wire Harness (Connector Location)
IB1	56 (Column Shift)	Front Door LH Wire and Instrument Panel Wire (Left Kick Panel)
	60 (Floor Shift)	
IB2	56 (Column Shift)	
	60 (Floor Shift)	
ID2	56 (Column Shift)	Floor No.1 Wire and Cowl Wire (Left Kick Panel)
	60 (Floor Shift)	
IN1	58 (Column Shift)	Front Door RH Wire and Instrument Panel Wire (Right Kick Panel)
	62 (Floor Shift)	

: GROUND POINTS

Code	See Page	Ground Points Location
IF	56 (Column Shift)	Left Kick Panel
	60 (Floor Shift)	
IG	56 (Column Shift)	Cowl Side Panel LH
	60 (Floor Shift)	
II	56 (Column Shift)	Right Kick Panel
	60 (Floor Shift)	

RADIO AND PLAYER (7 SPEAKER)

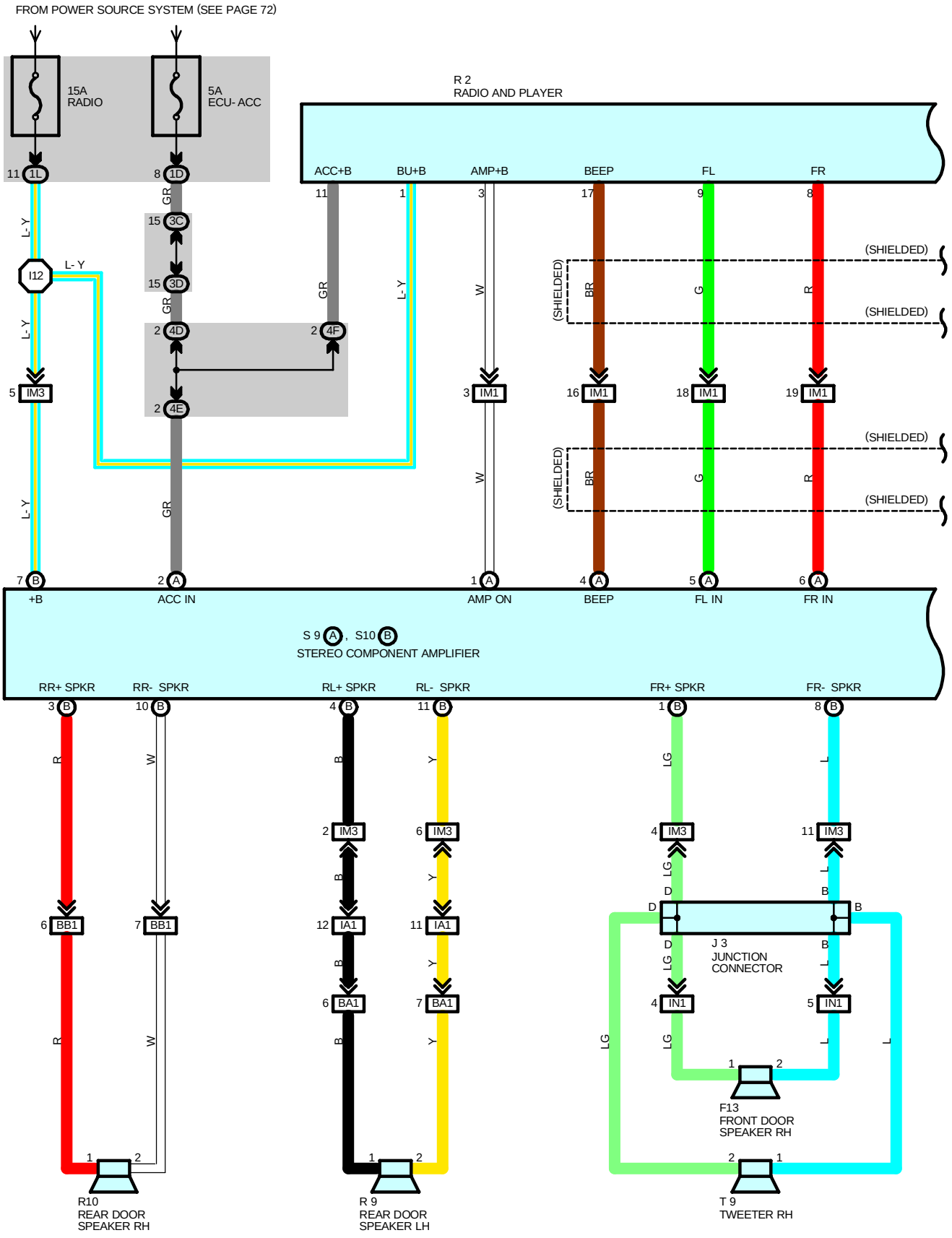

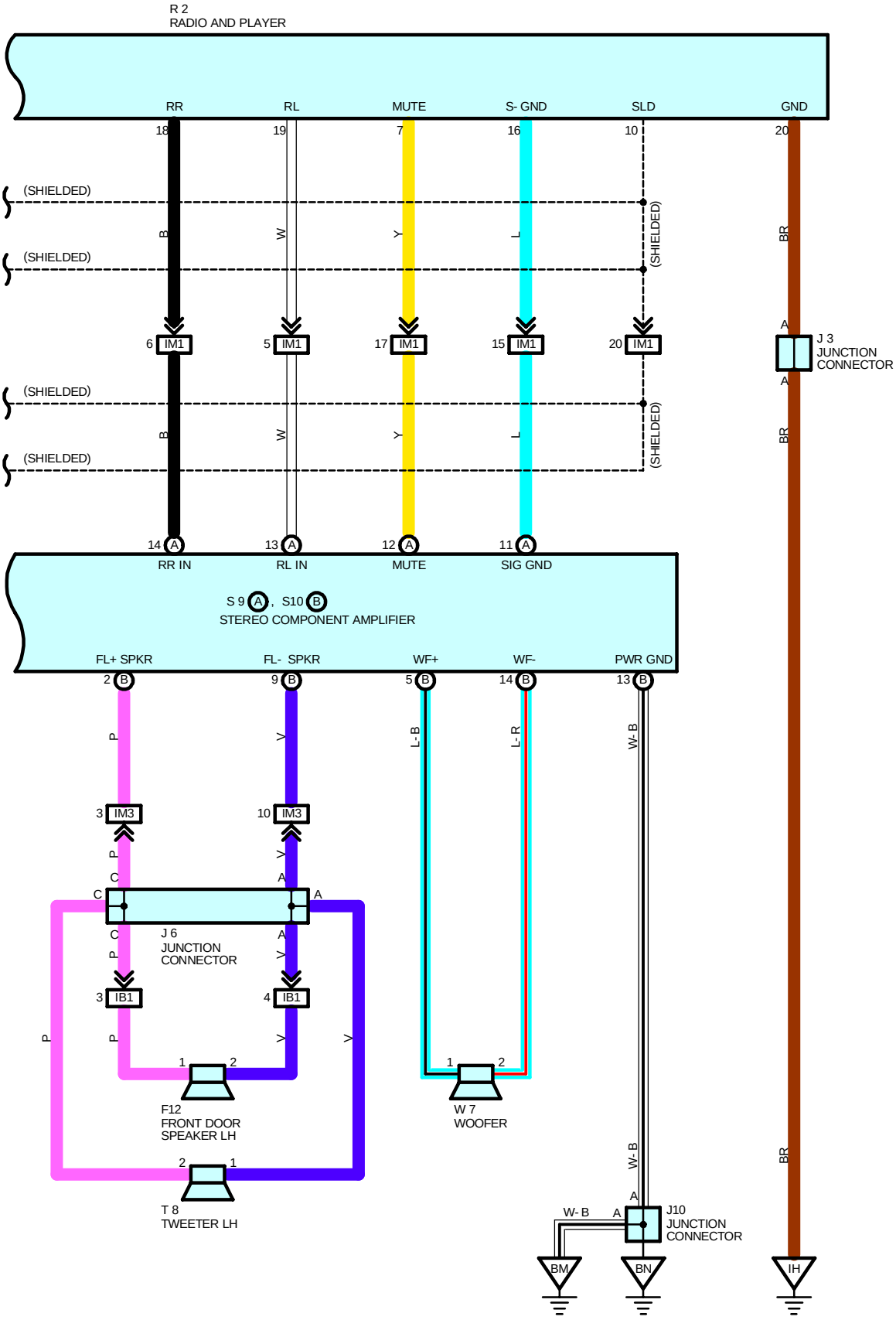
R 2
RADIO AND PLAYER
RR
RL
MUTE
S- GND
SLD
GND
18
19
7
16
10
20
(SHIELDED)
(SHIELDED)
(SHIELDED)
(SHIELDED)
(SHIELDED)
B
W
Y
L
BR
6 IM1
5 IM1
17 IM1
15 IM1
20 IM1
A
J 3
JUNCTION
CONNECTOR
A
14 A
13 A
12 A
11 A
RR IN
RL IN
MUTE
SIG GND
S 9 A , S10 B
STEREO COMPONENT AMPLIFIER
FL+ SPKR
FL- SPKR
WF+
WF-
PWR GND
2 B
9 B
5 B
14 B
13 B
P
V
L- B
L- R
W- B
3 IM3
10 IM3
C
A
J 6
JUNCTION
CONNECTOR
3 IB1
4 IB1
1
2
F12
FRONT DOOR
SPEAKER LH
W 7
WOOFER
T 8
TWEETER LH
W- B
J10
JUNCTION
CONNECTOR
BM
BN
IH

RADIO AND PLAYER (7 SPEAKER)

SERVICE HINTS

S9 (A), S10 (B) STEREO COMPONENT AMPLIFIER

(A) 2-GROUND : Approx. **12** volts with the ignition SW **ON** or **ACC** position
(B) 7-GROUND : Always approx. **12** volts
(B)13-GROUND : Always continuity

: PARTS LOCATION

Code	See Page	Code	See Page	Code	See Page
F12	50	J10	50	S10 B	51
F13	50	R2	47 (Column Shift)	T8	47 (Column Shift)
J3	47 (Column Shift)		49 (Floor Shift)		49 (Floor Shift)
	49 (Floor Shift)	R9	51	T9	47 (Column Shift)
J6	47 (Column Shift)	R10	51		49 (Floor Shift)
	49 (Floor Shift)	S9 A	51	W7	51

: JUNCTION BLOCK AND WIRE HARNESS CONNECTOR

Code	See Page	Junction Block and Wire Harness (Connector Location)
1D	27	Cowl Wire and Driver Side J/B (Lower Finish Panel)
1L	26	Instrument Panel Wire and Driver Side J/B (Lower Finish Panel)
3C	34	Cowl Wire and J/B No.3 (Left Kick Panel)
3D		
4D	38	Cowl Wire and J/B No.4 (Right Kick Panel)
4E	39	Floor No.2 Wire and J/B No.4 (Right Kick Panel)
4F	39	Instrument Panel Wire and J/B No.4 (Right Kick Panel)

: CONNECTOR JOINING WIRE HARNESS AND WIRE HARNESS

Code	See Page	Joining Wire Harness and Wire Harness (Connector Location)
IA1	56 (Column Shift)	Floor No.1 Wire and Instrument Panel Wire (Left Kick Panel)
	60 (Floor Shift)	
IB1	56 (Column Shift)	Front Door LH Wire and Instrument Panel Wire (Left Kick Panel)
	60 (Floor Shift)	
IM1	58 (Column Shift)	Floor No.2 Wire and Instrument Panel Wire (Right Kick Panel)
	62 (Floor Shift)	
IM3	58 (Column Shift)	
	62 (Floor Shift)	
IN1	58 (Column Shift)	Front Door RH Wire and Instrument Panel Wire (Right Kick Panel)
	62 (Floor Shift)	
BA1	64	Rear Door No.2 Wire and Floor No.1 Wire (Under the Left Center Pillar)
BB1	64	Rear Door No.1 Wire and Floor No.2 Wire (Under the Right Center Pillar)

: GROUND POINTS

Code	See Page	Ground Points Location
IH	56 (Column Shift)	Instrument Panel Brace RH
	60 (Floor Shift)	
BM	64	Back Panel Center
BN	64	Rear Quarter Inner RH

: SPLICE POINTS

Code	See Page	Wire Harness with Splice Points	Code	See Page	Wire Harness with Splice Points
I12	58 (Column Shift)	Instrument Panel Wire	I12	62 (Floor Shift)	Instrument Panel Wire

RADIO AND PLAYER (6 SPEAKER)

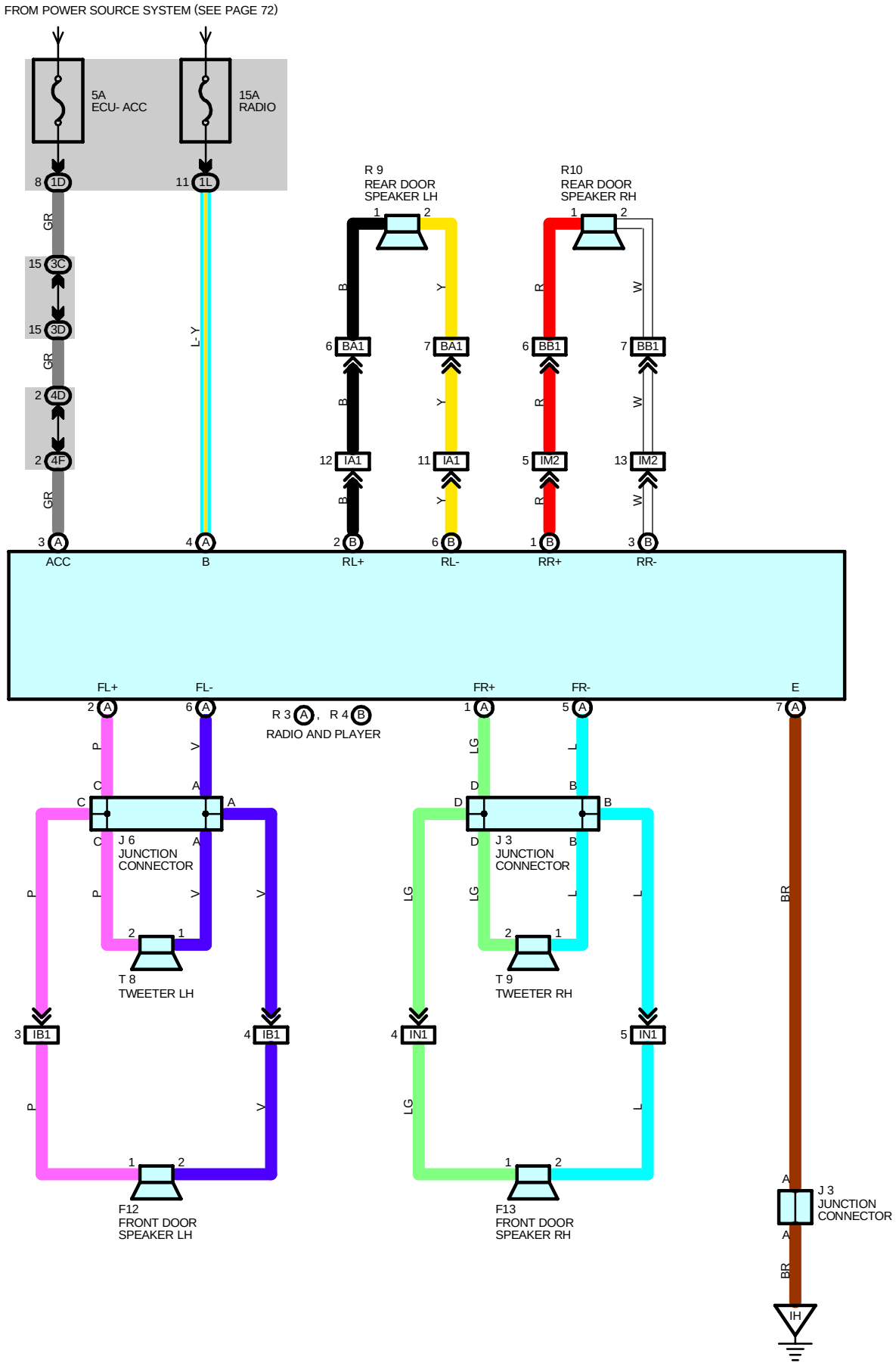

SERVICE HINTS

R3 (A) RADIO AND PLAYER

(A) 4-GROUND : Always approx. **12** volts
(A) 3-GROUND : Approx. **12** volts with the ignition SW **ON** or **ACC** position
(A) 7-GROUND : Always continuity

: PARTS LOCATION

Code	See Page	Code		See Page	Code	See Page
F12	50	R3	A	47 (Column Shift)	T8	47 (Column Shift)
F13	50			49 (Floor Shift)		49 (Floor Shift)
J3	47 (Column Shift)	R4	B	47 (Column Shift)	T9	47 (Column Shift)
	49 (Floor Shift)			49 (Floor Shift)		49 (Floor Shift)
J6	47 (Column Shift)	R9		51		
	49 (Floor Shift)	R10		51		

: JUNCTION BLOCK AND WIRE HARNESS CONNECTOR

Code	See Page	Junction Block and Wire Harness (Connector Location)
1D	27	Cowl Wire and Driver Side J/B (Lower Finish Panel)
1L	26	Instrument Panel Wire and Driver Side J/B (Lower Finish Panel)
3C	34	Cowl Wire and J/B No.3 (Left Kick Panel)
3D		
4D	38	Cowl Wire and J/B No.4 (Right Kick Panel)
4F	39	Instrument Panel Wire and J/B No.4 (Right Kick Panel)

: CONNECTOR JOINING WIRE HARNESS AND WIRE HARNESS

Code	See Page	Joining Wire Harness and Wire Harness (Connector Location)
IA1	56 (Column Shift)	Floor No.1 Wire and Instrument Panel Wire (Left Kick Panel)
	60 (Floor Shift)	
IB1	56 (Column Shift)	Front Door LH Wire and Instrument Panel Wire (Left Kick Panel)
	60 (Floor Shift)	
IM2	58 (Column Shift)	Floor No.2 Wire and Instrument Panel Wire (Right Kick Panel)
	62 (Floor Shift)	
IN1	58 (Column Shift)	Front Door RH Wire and Instrument Panel Wire (Right Kick Panel)
	62 (Floor Shift)	
BA1	64	Rear Door No.2 Wire and Floor No.1 Wire (Under the Left Center Pillar)
BB1	64	Rear Door No.1 Wire and Floor No.2 Wire (Under the Right Center Pillar)

: GROUND POINTS

Code	See Page	Ground Points Location
IH	56 (Column Shift)	Instrument Panel Brace RH
	60 (Floor Shift)	

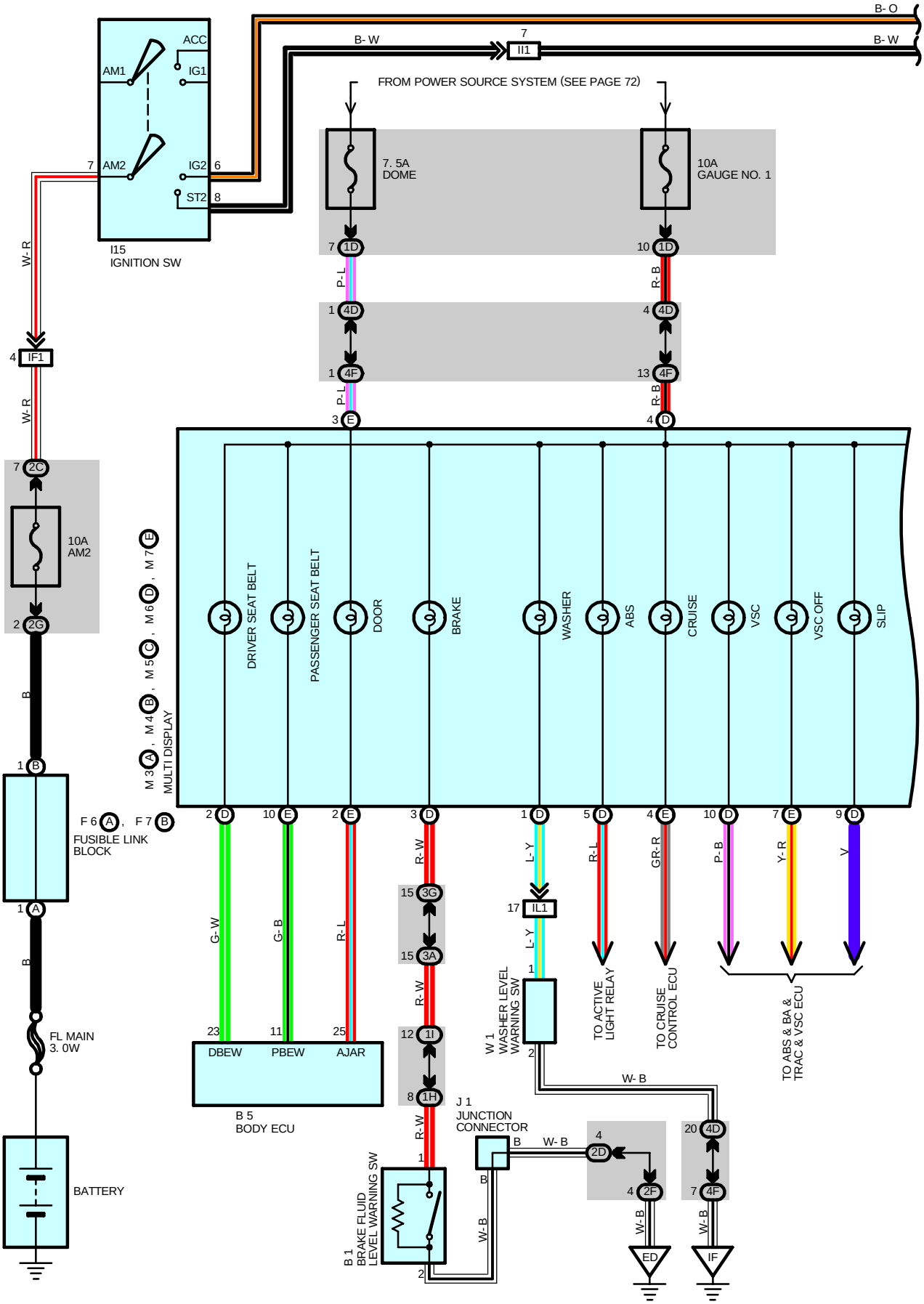
B- O
B- W
7
I11
B- W
FROM POWER SOURCE SYSTEM (SEE PAGE 72)
ACC
AM1
IG1
7
AM2
IG2
6
ST2
8
I15
IGNITION SW
7. 5A
DOME
10A
GAUGE NO. 1
7 1D
10 1D
P- L
R- B
1 4D
4 4D
1 4F
13 4F
P- L
R- B
3 E
4 D
W- R
4 IF1
W- R
7 2C
10A
AM2
2 2G
B
1 B
1 A
B
FL MAIN
3. 0W
BATTERY
F 6 A , F 7 B
FUSIBLE LINK
BLOCK
M 3 A , M 4 B , M 5 C , M 6 D , M 7 E
MULTI DISPLAY
DRIVER SEAT BELT
PASSENGER SEAT BELT
DOOR
BRAKE
WASHER
ABS
CRUISE
VSC
VSC OFF
SLIP
2 D
10 E
2 E
3 D
1 D
5 D
4 E
10 D
7 E
9 D
G- W
G- B
R- L
R- W
L- Y
R- L
GR- R
P- B
Y- R
V
15 3G
15 3A
17 IL1
L- Y
1
W 1
WASHER LEVEL
WARNING SW
2
TO ACTIVE
LIGHT RELAY
TO CRUISE
CONTROL ECU
TO ABS & BA &
TRAC & VSC ECU
23
11
25
DBEW
PBEW
AJAR
B 5
BODY ECU
R- W
12 1I
8 1H
J 1
JUNCTION
CONNECTOR
B
W- B
4 2D
20 4D
4 2F
7 4F
W- B
W- B
ED
IF
R- W
1
B
W- B
B 1
BRAKE FLUID
LEVEL WARNING SW
2

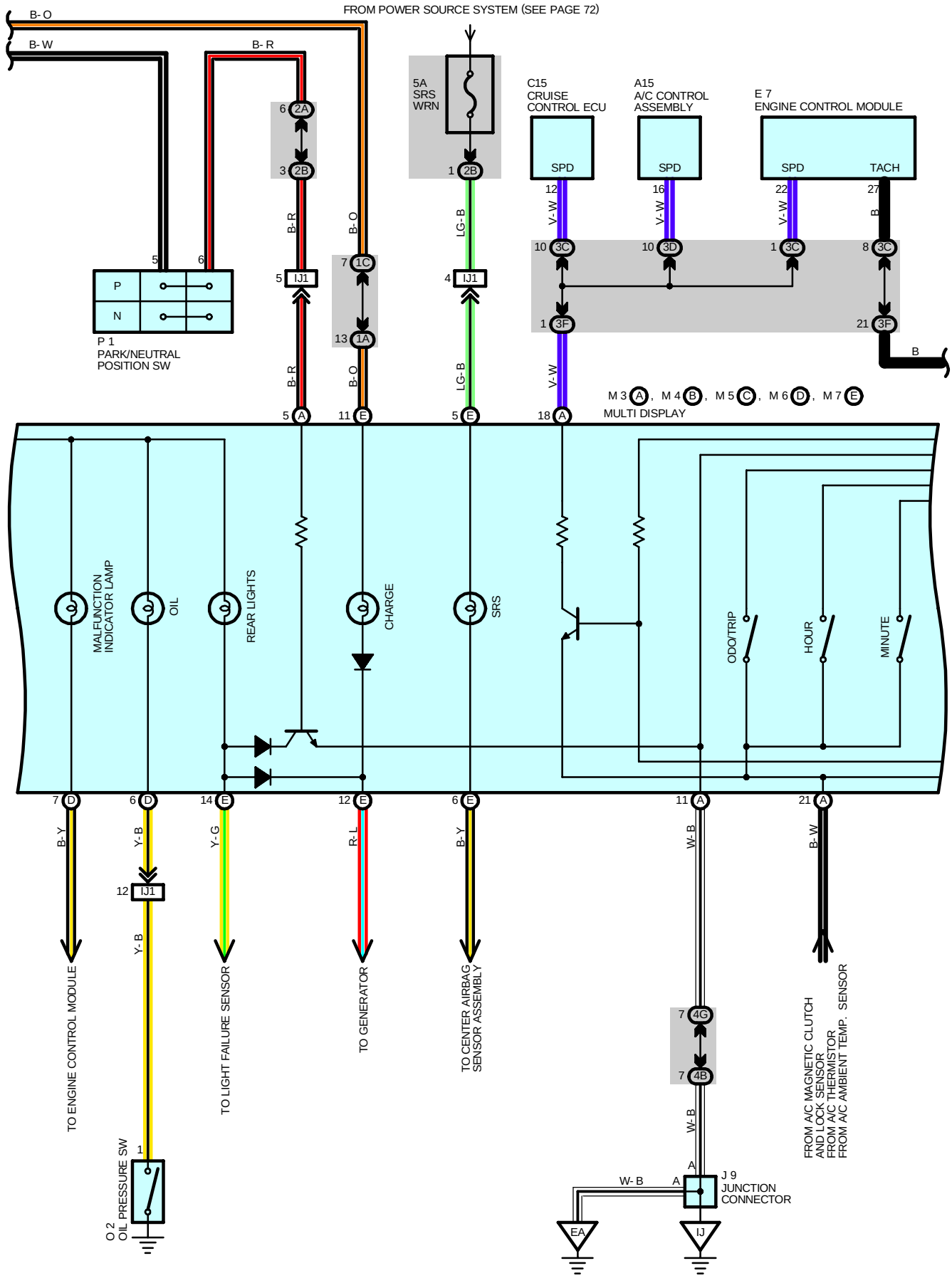
FROM POWER SOURCE SYSTEM (SEE PAGE 72)
B- O
B- W
B- R
5A
SRS
WRN
C15
CRUISE
CONTROL ECU
A15
A/C CONTROL
ASSEMBLY
E 7
ENGINE CONTROL MODULE
SPD
TACH
P
N
P 1
PARK/NEUTRAL
POSITION SW
IJ1
M 3 A , M 4 B , M 5 C , M 6 D , M 7 E
MULTI DISPLAY
MALFUNCTION
INDICATOR LAMP
OIL
REAR LIGHTS
CHARGE
SRS
ODO/TRIP
HOUR
MINUTE
TO ENGINE CONTROL MODULE
TO LIGHT FAILURE SENSOR
TO GENERATOR
TO CENTER AIRBAG
SENSOR ASSEMBLY
FROM A/C MAGNETIC CLUTCH
AND LOCK SENSOR
FROM A/C THERMISTOR
FROM A/C AMBIENT TEMP. SENSOR
O 2
OIL PRESSURE SW
J 9
JUNCTION
CONNECTOR
EA
IJ

COMBINATION METER

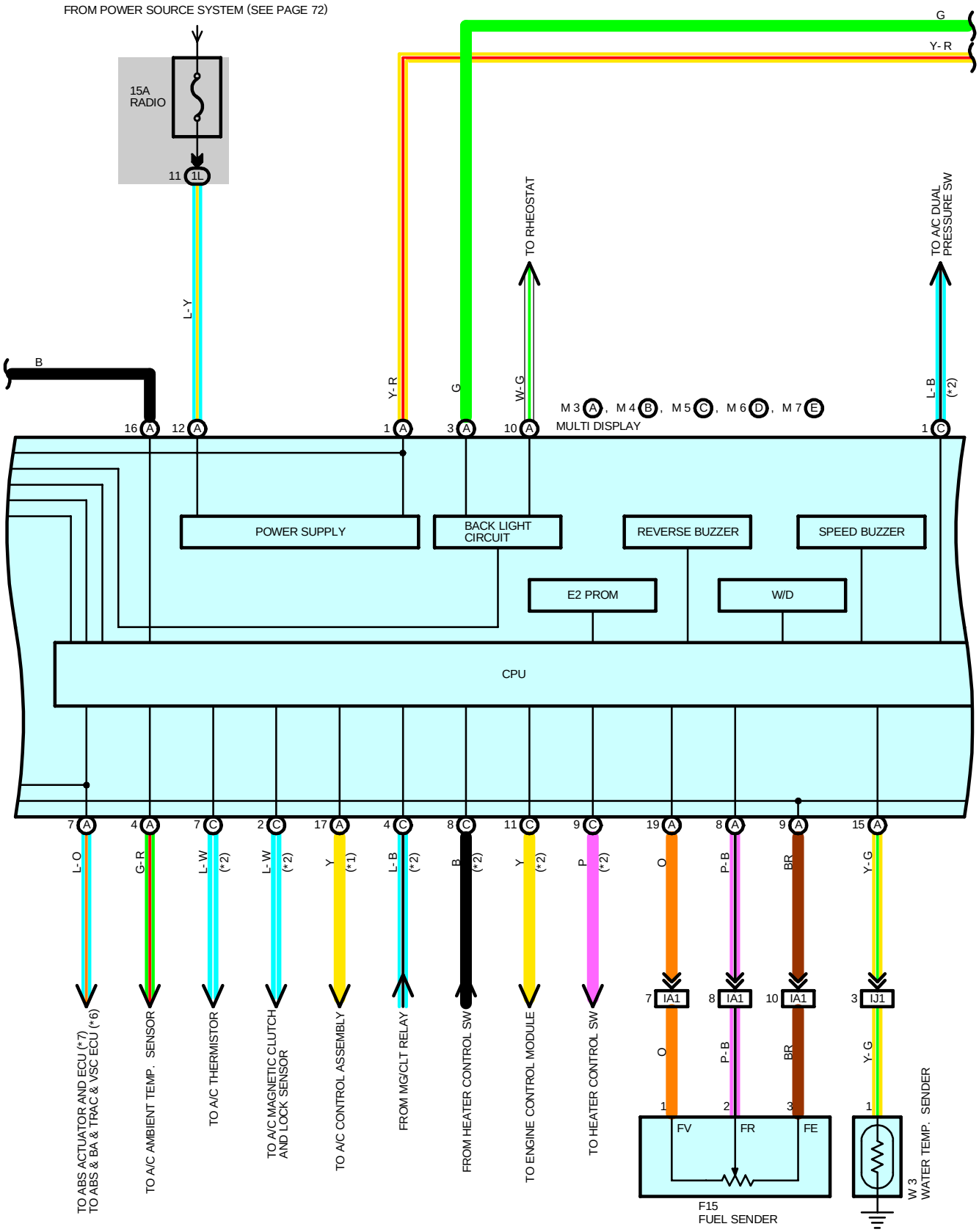

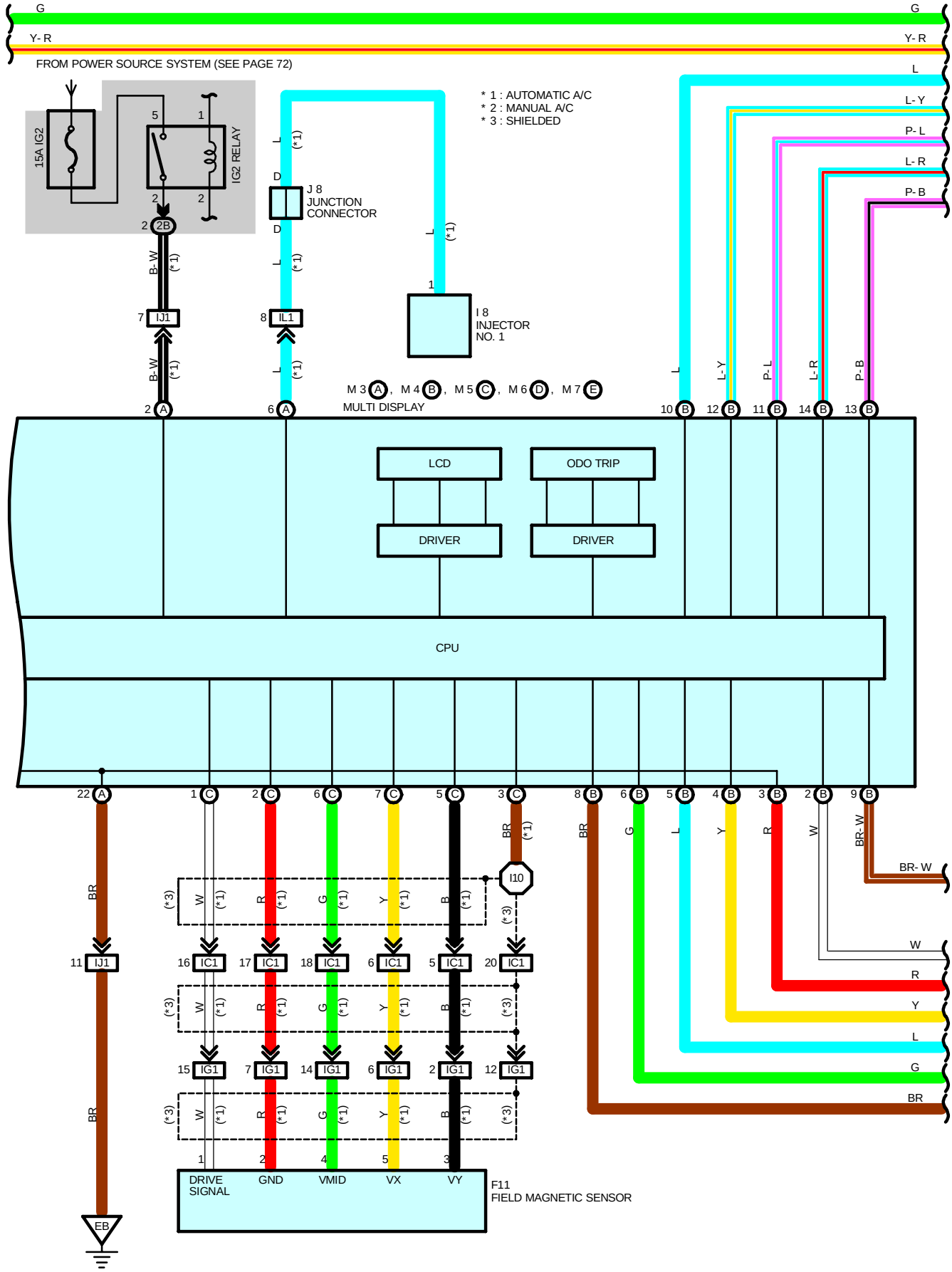
G
Y- R
FROM POWER SOURCE SYSTEM (SEE PAGE 72)
15A IG2
IG2 RELAY
* 1 : AUTOMATIC A/C
* 2 : MANUAL A/C
* 3 : SHIELDED
J 8
JUNCTION
CONNECTOR
I 8
INJECTOR
NO. 1
M 3 A , M 4 B , M 5 C , M 6 D , M 7 E
MULTI DISPLAY
LCD
ODO TRIP
DRIVER
DRIVER
CPU
L
L- Y
P- L
L- R
P- B
BR- W
W
R
Y
L
G
BR
I10
IJ1
IL1
IC1
IG1
EB
DRIVE
SIGNAL
GND
VMID
VX
VY
F11
FIELD MAGNETIC SENSOR

COMBINATION METER

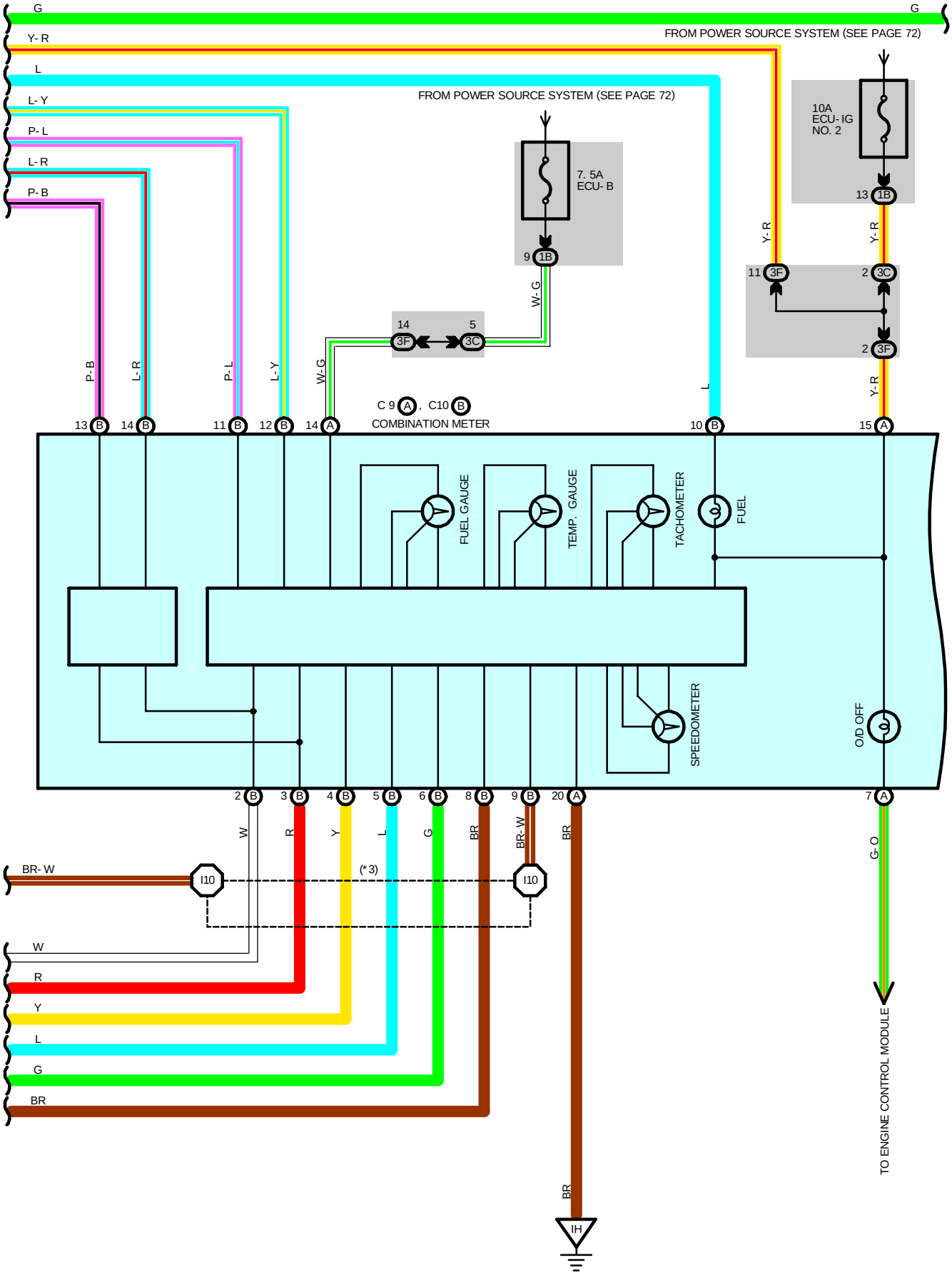

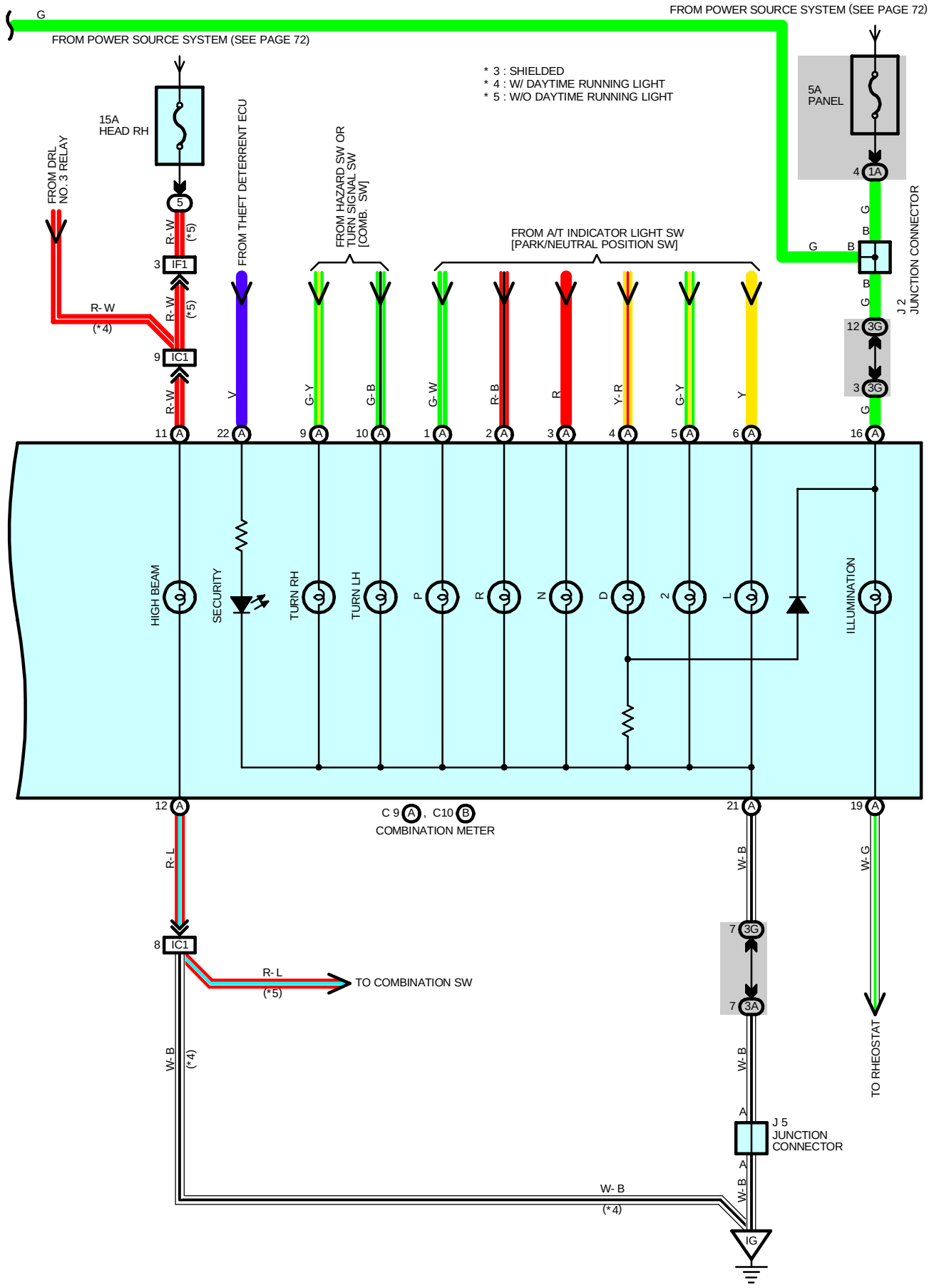
G
FROM POWER SOURCE SYSTEM (SEE PAGE 72)
FROM POWER SOURCE SYSTEM (SEE PAGE 72)
* 3 : SHIELDED
* 4 : W/ DAYTIME RUNNING LIGHT
* 5 : W/O DAYTIME RUNNING LIGHT
15A
HEAD RH
FROM DRL
NO. 3 RELAY
FROM THEFT DETERRENT ECU
FROM HAZARD SW OR
TURN SIGNAL SW
[COMB. SW]
FROM A/T INDICATOR LIGHT SW
[PARK/NEUTRAL POSITION SW]
5A
PANEL
J 2
JUNCTION CONNECTOR
R- W
(*4)
R- W
(*5)
IF1
IC1
HIGH BEAM
SECURITY
TURN RH
TURN LH
P
R
N
D
2
L
ILLUMINATION
C 9 A , C10 B
COMBINATION METER
R- L
(*5)
TO COMBINATION SW
W- B
(*4)
W- B
W- G
TO RHEOSTAT
J 5
JUNCTION
CONNECTOR
W- B
(*4)
IG

COMBINATION METER

SERVICE HINTS

B1 BRAKE FLUID LEVEL WARNING SW

1-2 : Closed with the float down

M3 (A), M4 (B), M5 (C), M6 (D), M7 (E) MULTI DISPLAY

(B)7-GROUND : Approx. **12** volts with the ignition SW at **ST** position and the shift lever at **P** or **N** position
(D)4-GROUND : Approx. **12** volts with the ignition SW at **ON** position
(A)12, (E)3-GROUND : Always approx. **12** volts
(A)11, (A)22-GROUND : Always continuity

O2 OIL PRESSURE SW

1-GROUND : Closed with the oil pressure above approx. **20** kpa (**2.8** psi, **0.2** kgf/cm^2)

W3 WATER TEMP. SENDER

1-GROUND : Approx. **160**- **240** Ω (**50**˚C ,**122**˚F)
Approx. **17.1**- **20.4** Ω (**120**˚C,**288**˚F)

C9 (A), C10 (B) COMBINATION METER

(A)14, (A)16-GROUND :
Always approx. **12** volts
(A)15-GROUND : Approx. **12** volts with the ignition SW at **ON** position
(A)21-GROUND : Always continuity

○ : PARTS LOCATION

Code		See Page	Code	See Page	Code		See Page
A15		46 (Column Shift)	F11	50	M3	A	47 (Column Shift)
		48 (Floor Shift)	F15	50			49 (Floor Shift)
B1		44	I8	45	M4	B	47 (Column Shift)
B5		46 (Column Shift)	I15	47 (Column Shift)			49 (Floor Shift)
		48 (Floor Shift)		49 (Floor Shift)	M5	C	47 (Column Shift)
C9	A	46 (Column Shift)	J1	47 (Column Shift)			49 (Floor Shift)
		48 (Floor Shift)		49 (Floor Shift)	M6	D	47 (Column Shift)
C10	B	46 (Column Shift)	J2	47 (Column Shift)			49 (Floor Shift)
		48 (Floor Shift)		49 (Floor Shift)	M7	E	47 (Column Shift)
C15		46 (Column Shift)	J5	47 (Column Shift)			49 (Floor Shift)
		48 (Floor Shift)		49 (Floor Shift)	O2		45
E7		46 (Column Shift)	J8	47 (Column Shift)	P1		45
		48 (Floor Shift)		49 (Floor Shift)	W1		45
F6	A	44	J9	47 (Column Shift)	W3		45
F7	B	44		49 (Floor Shift)			

⬭ : RELAY BLOCKS

Code	See Page	Relay Blocks (Relay Block Location)
5	25	Engine Room R/B No.5 (Engine Compartment Left)

: JUNCTION BLOCK AND WIRE HARNESS CONNECTOR

Code	See Page	Junction Block and Wire Harness (Connector Location)
1A	26	Instrument Panel Wire and Driver Side J/B (Lower Finish Panel)
1B	27	Cowl Wire and Driver Side J/B (Lower Finish Panel)
1C		
1D		
1H	27	Engine Room Main Wire and Driver Side J/B (Lower Finish Panel)
1I	27	Cowl Wire and Driver Side J/B (Lower Finish Panel)
1L	26	Instrument Panel Wire and Driver Side J/B (Lower Finish Panel)
2A	30	Engine Wire and Engine Room J/B (Engine Compartment Left)
2B		
2C	30	Engine Room Main Wire and Engine Room J/B (Engine Compartment Left)
2D		
2F		
2G	30	Engine Wire and Engine Room J/B (Engine Compartment Left)
3A	34	Cowl Wire and J/B No.3 (Left Kick Panel)
3C		
3D		
3F	35	Instrument Panel Wire and J/B No.3 (Left Kick Panel)
3G		
4B	38	Cowl Wire and J/B No.4 (Right Kick Panel)
4D		
4F	39	Instrument Panel Wire and J/B No.4 (Right Kick Panel)
4G		

: CONNECTOR JOINING WIRE HARNESS AND WIRE HARNESS

Code	See Page	Joining Wire Harness and Wire Harness (Connector Location)
IA1	56 (Column Shift)	Floor No.1 Wire and Instrument Panel Wire (Left Kick Panel)
	60 (Floor Shift)	
IC1	56 (Column Shift)	Cowl Wire and Instrument Panel Wire (Left Kick Panel)
	60 (Floor Shift)	
IF1	56 (Column Shift)	Engine Room Main Wire and Cowl Wire (Left Side of Instrument Panel)
	60 (Floor Shift)	
IG1	56 (Column Shift)	Roof Wire and Cowl Wire (Front Left Pillar)
	60 (Floor Shift)	
II1	58 (Column Shift)	Engine Wire and Cowl Wire (Behind the Glove Box)
	62 (Floor Shift)	
IJ1	58 (Column Shift)	Engine Wire and Instrument Panel Wire (Right Kick Panel)
	62 (Floor Shift)	
IL1	58 (Column Shift)	Cowl Wire and Instrument Panel Wire (Right Kick Panel)
	62 (Floor Shift)	

COMBINATION METER

 **: GROUND POINTS**

Code	See Page	Ground Points Location
EA	54	Front Side of Right Fender
EB	54	Surge Tank RH
ED	54	Front Side of Left Fender
IF	56 (Column Shift) 60 (Floor Shift)	Left Kick Panel
IG	56 (Column Shift) 60 (Floor Shift)	Cowl Side Panel LH
IH	56 (Column Shift) 60 (Floor Shift)	Instrument Panel Brace RH
IJ	56 (Column Shift) 60 (Floor Shift)	Cowl Side Panel RH

 **: SPLICE POINTS**

Code	See Page	Wire Harness with Splice Points	Code	See Page	Wire Harness with Splice Points
I10	58 (Column Shift)	Instrument Panel Wire	I10	62 (Floor Shift)	Instrument Panel Wire

RADIATOR FAN AND CONDENSER FAN

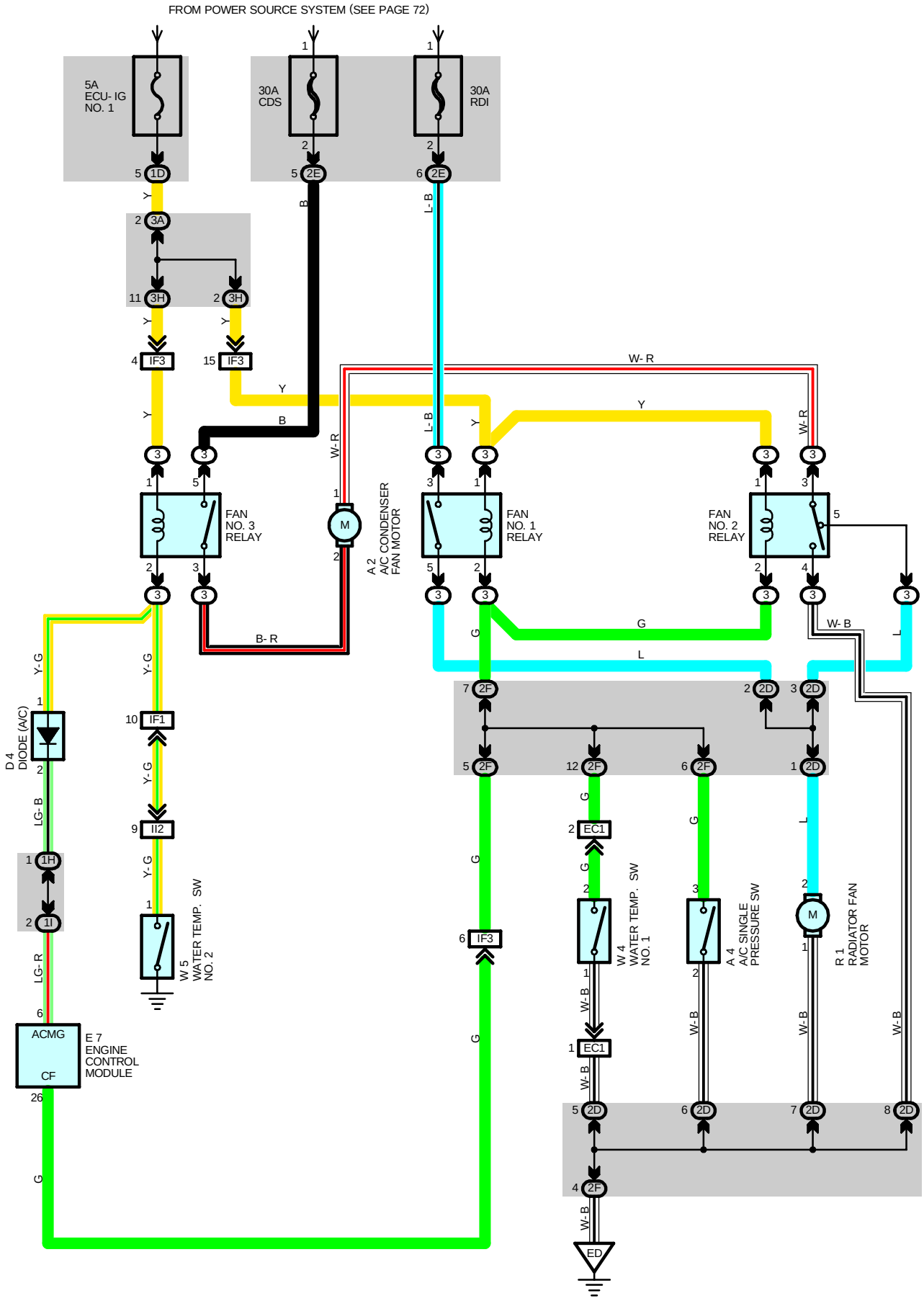

SYSTEM OUTLINE

The radiator fan motor and A/C condenser fan motor operates according to the water temp. SW NO.1, water temp. SW NO.2, A/C single pressure SW, and the A/C system condition. The FAN NO.1 relay, FAN NO.2 relay, FAN NO.3 relay are turned on/off, to operate the fan motors at low speed (In series), or high speed (In parallel).

1. LOW SPEED OPERATION

Either when the A/C system is operating, or when the water temp. SW NO.2 is on, the radiator fan motor and A/C condenser fan motor operates at low speed.

2. HIGH SPEED OPERATION

Either when the A/C system is operating, or when the water temp. SW NO.2 is on, if the water temp. SW NO.1 or A/C single pressure SW is on, the radiator fan motor and A/C condenser fan motor operates at high speed.

SERVICE HINTS

A3 A/C SINGLE PRESSURE SW

3-2 : Open above approx. **15.5** kgf/cm^2 (**224** psi, **1520** kpa)
Close below approx. **12.5** kgf/cm^2 (**181** psi, **1225** kpa)

: PARTS LOCATION

Code	See Page	Code	See Page	Code	See Page
A2	44	D4	48 (Floor Shift)	R1	45
A4	44	E7	46 (Column Shift)	W4	45
D4	46 (Column Shift)		48 (Floor Shift)	W5	45

: RELAY BLOCKS

Code	See Page	Relay Blocks (Relay Block Location)
3	24	Engine Room R/B No.3 (Near the Radiator Fan)

: JUNCTION BLOCK AND WIRE HARNESS CONNECTOR

Code	See Page	Junction Block and Wire Harness (Connector Location)
1D	27	Cowl Wire and Driver Side J/B (Lower Finish Panel)
1H	27	Engine Room Main Wire and Driver Side J/B (Lower Finish Panel)
1I	27	Cowl Wire and Driver Side J/B (Lower Finish Panel)
2D	30	Engine Room Main Wire and Engine Room J/B (Engine Compartment Left)
2E		
2F		
3A	34	Cowl Wire and J/B No.3 (Left Kick Panel)
3H	35	

: CONNECTOR JOINING WIRE HARNESS AND WIRE HARNESS

Code	See Page	Joining Wire Harness and Wire Harness (Connector Location)
EC1	54	Engine Room Main Wire and Engine Room No.3 Wire (Near the Radiator Fan)
IF1	56 (Column Shift)	Engine Room Main Wire and Cowl Wire (Left Side of Instrument Panel)
	60 (Floor Shift)	
IF3	56 (Column Shift)	
	60 (Floor Shift)	
II2	58 (Column Shift)	Engine Wire and Cowl Wire (Behind the Glove Box)
	62 (Floor Shift)	

: GROUND POINTS

Code	See Page	Ground Points Location
ED	54	Front Side of Left Fender

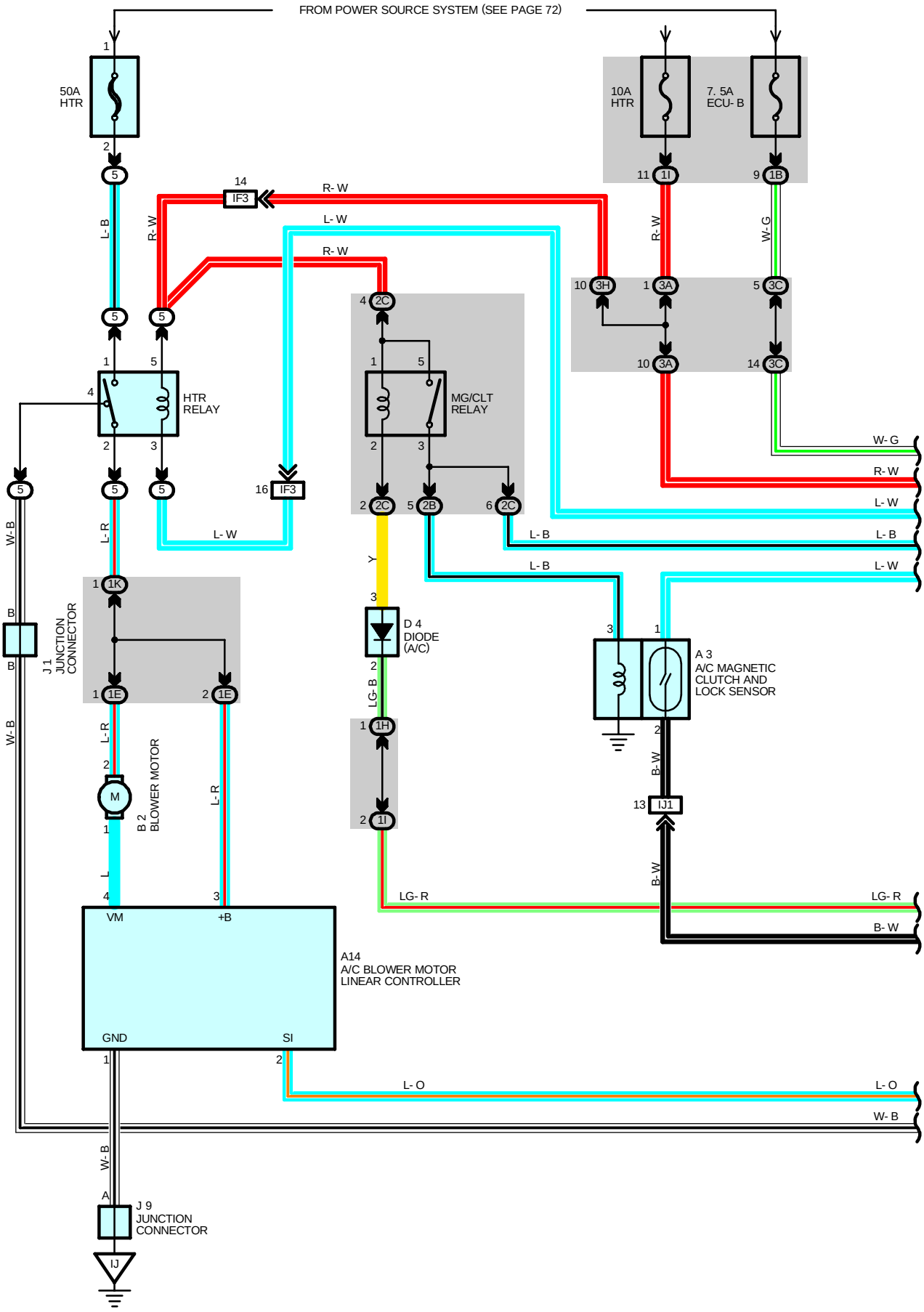
FROM POWER SOURCE SYSTEM (SEE PAGE 72)
50A HTR
10A HTR
7. 5A ECU- B
HTR RELAY
MG/CLT RELAY
D 4 DIODE (A/C)
A 3 A/C MAGNETIC CLUTCH AND LOCK SENSOR
J 1 JUNCTION CONNECTOR
B 2 BLOWER MOTOR
A14 A/C BLOWER MOTOR LINEAR CONTROLLER
J 9 JUNCTION CONNECTOR
VM
+B
GND
SI
R- W
L- W
L- B
W- G
L- R
L- O
W- B
LG- R
B- W
LG- B
Y

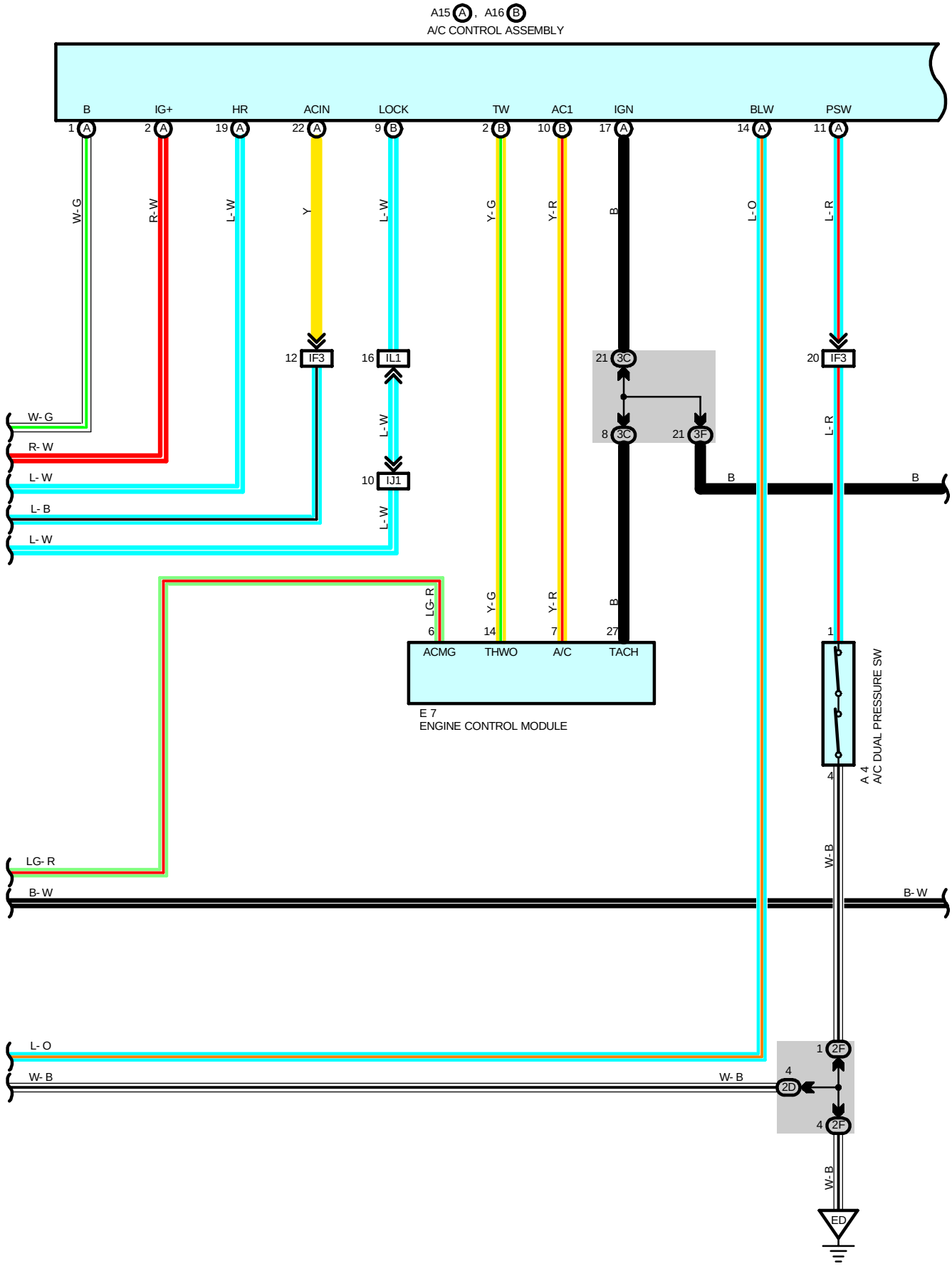
A15 A , A16 B
A/C CONTROL ASSEMBLY
B
IG+
HR
ACIN
LOCK
TW
AC1
IGN
BLW
PSW
1 A
2 A
19 A
22 A
9 B
2 B
10 B
17 A
14 A
11 A
W- G
R- W
L- W
Y
L- W
Y- G
Y- R
B
L- O
L- R
12 IF3
16 IL1
21 3C
20 IF3
8 3C
21 3F
L- W
L- R
10 IJ1
B
B
W- G
R- W
L- W
L- B
L- W
LG- R
Y- G
Y- R
B
6
14
7
27
1
ACMG
THWO
A/C
TACH
E 7
ENGINE CONTROL MODULE
A 4
A/C DUAL PRESSURE SW
4
W- B
LG- R
B- W
B- W
L- O
W- B
W- B
1 2F
4 2D
4 2F
W- B
ED

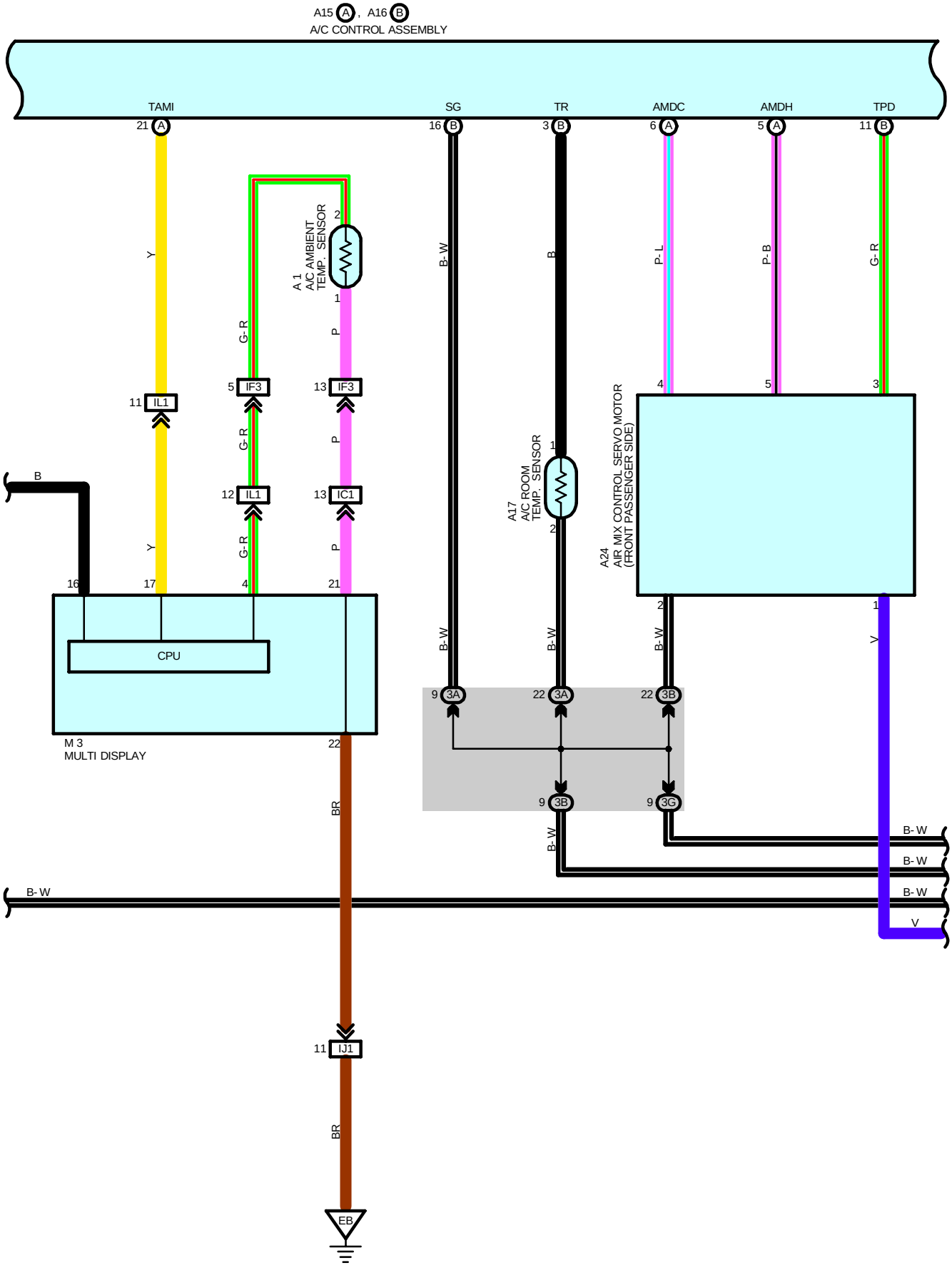
A15 A , A16 B
A/C CONTROL ASSEMBLY
TAMI
SG
TR
AMDC
AMDH
TPD
21 A
16 B
3 B
6 A
5 A
11 B
Y
B-W
B
P-L
P-B
G-R
A 1
A/C AMBIENT TEMP. SENSOR
2
1
P
G-R
5 IF3
13 IF3
11 IL1
G-R
P
12 IL1
13 IC1
G-R
P
Y
16
17
4
21
B
CPU
M 3
MULTI DISPLAY
22
BR
11 IJ1
BR
EB
A17
A/C ROOM TEMP. SENSOR
1
2
A24
AIR MIX CONTROL SERVO MOTOR (FRONT PASSENGER SIDE)
4
5
3
2
1
B-W
V
9 3A
22 3A
22 3B
9 3B
9 3G
B-W
B-W
B-W
B-W
V

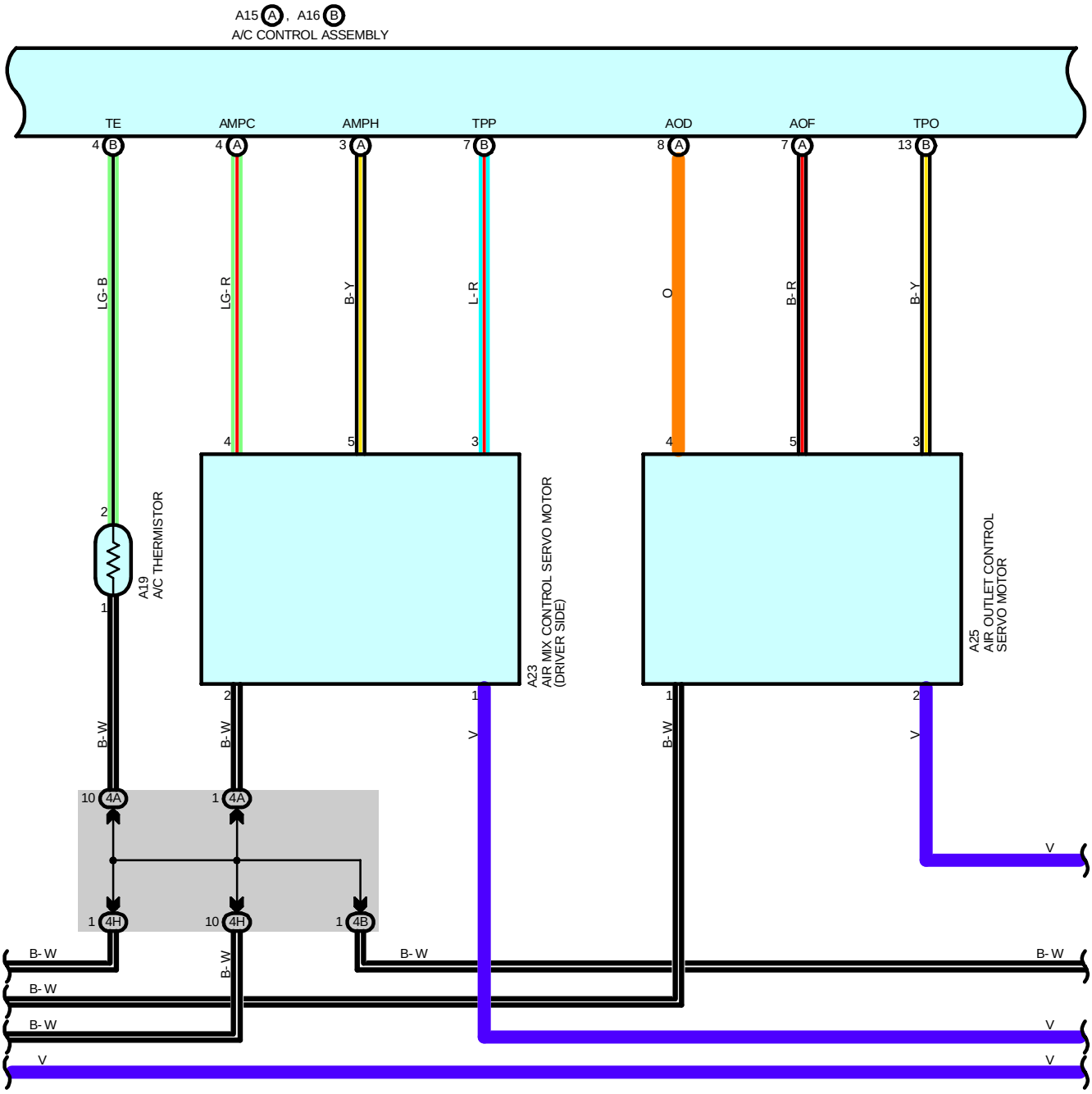
A15 A, A16 B
A/C CONTROL ASSEMBLY
TE
AMPC
AMPH
TPP
AOD
AOF
TPO
LG- B
LG- R
B- Y
L- R
O
B- R
B- Y
A19
A/C THERMISTOR
A23
AIR MIX CONTROL SERVO MOTOR
(DRIVER SIDE)
A25
AIR OUTLET CONTROL
SERVO MOTOR
B- W
V
4A
4H
4B

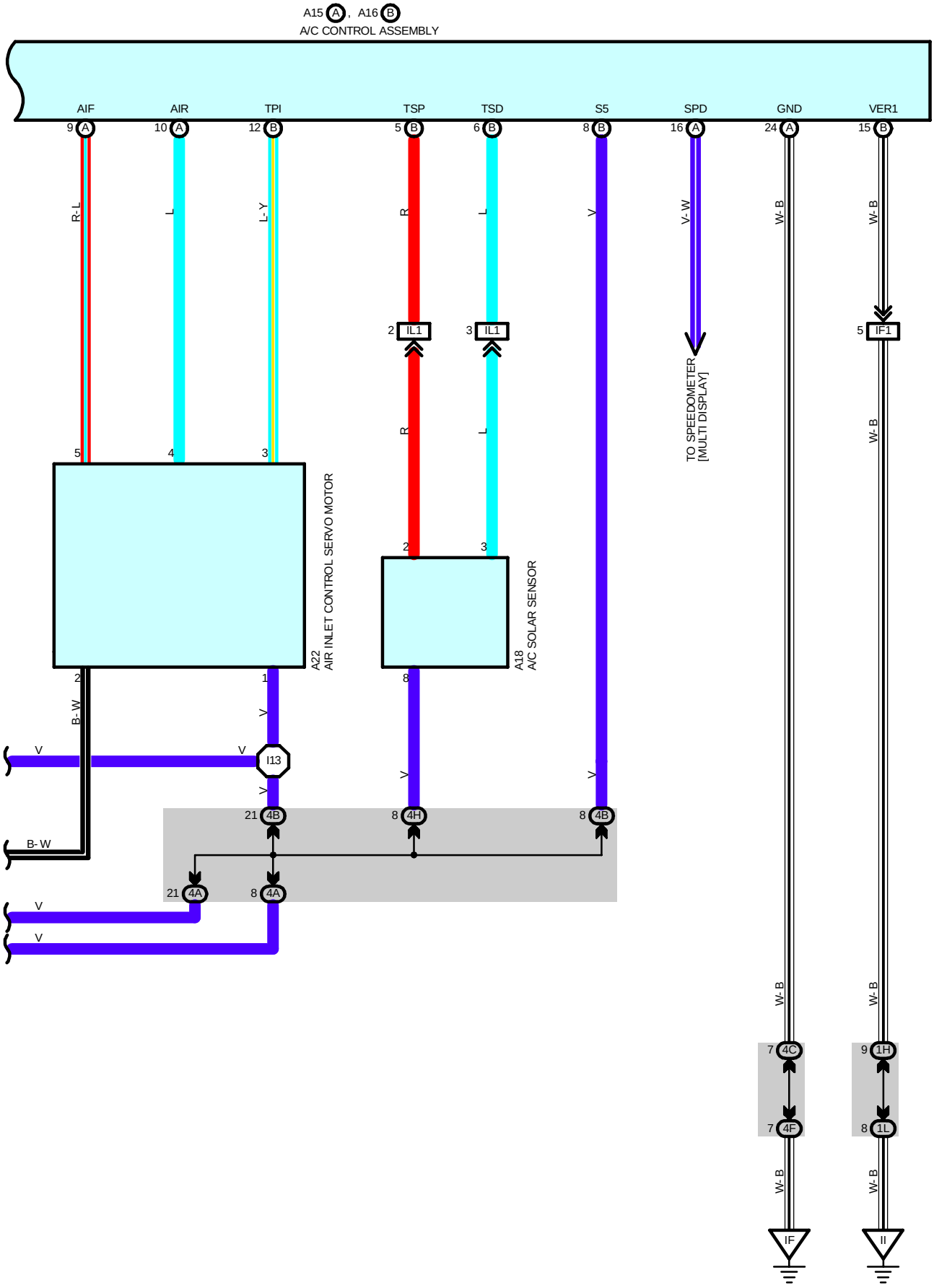
A15 A, A16 B
A/C CONTROL ASSEMBLY
AIF
AIR
TPI
TSP
TSD
S5
SPD
GND
VER1
9 A
10 A
12 B
5 B
6 B
8 B
16 A
24 A
15 B
R-L
L
L-Y
R
L
V
V-W
W-B
W-B
2 IL1
3 IL1
5 IF1
W-B
TO SPEEDOMETER [MULTI DISPLAY]
5
4
3
2
3
A22
AIR INLET CONTROL SERVO MOTOR
A18
A/C SOLAR SENSOR
2
1
8
B-W
V
V
V
I13
V
V
21 4B
8 4H
8 4B
B-W
21 4A
8 4A
V
V
W-B
W-B
7 4C
9 1H
7 4F
8 1L
W-B
W-B
IF
II

SERVICE HINTS

A3 A/C DUAL PRESSURE SW

1-4 : Open above approx. **2.0** kgf/cm^2 (**29** psi, **196** kpa) or **32** kgf/cm^2 (**464** psi, **3140** kpa)

A15 (A), A16 (B) A/C CONTROL ASSEMBLY

(A) 1-GROUND : Always approx. **12** volts
(A) 2-GROUND : Approx. **12** volts with the ignition SW at **ON** position
(A)24-GROUND : Always continuity

: PARTS LOCATION

Code	See Page	Code	See Page	Code	See Page
A1	44	A18	48 (Floor Shift)	B2	48 (Floor Shift)
A3	44	A19	46 (Column Shift)	D4	46 (Column Shift)
A4	44		48 (Floor Shift)		48 (Floor Shift)
A14	46 (Column Shift)	A22	46 (Column Shift)	E7	46 (Column Shift)
	48 (Floor Shift)		48 (Floor Shift)		48 (Floor Shift)
A15 A	46 (Column Shift)	A23	46 (Column Shift)	J1	47 (Column Shift)
	48 (Floor Shift)		48 (Floor Shift)		49 (Floor Shift)
A16 B	46 (Column Shift)	A24	46 (Column Shift)	J9	47 (Column Shift)
	48 (Floor Shift)		48 (Floor Shift)		49 (Floor Shift)
A17	46 (Column Shift)	A25	46 (Column Shift)	M3	47 (Column Shift)
	48 (Floor Shift)		48 (Floor Shift)		49 (Floor Shift)
A18	46 (Column Shift)	B2	46 (Column Shift)		

: RELAY BLOCKS

Code	See Page	Relay Blocks (Relay Block Location)
5	25	Engine Room R/B No.5 (Engine Compartment Left)

: JUNCTION BLOCK AND WIRE HARNESS CONNECTOR

Code	See Page	Junction Block and Wire Harness (Connector Location)
1B	27	Cowl Wire and Driver Side J/B (Lower Finish Panel)
1E		
1H	27	Engine Room Main Wire and Driver Side J/B (Lower Finish Panel)
1I	27	Cowl Wire and Driver Side J/B (Lower Finish Panel)
1K	27	Engine Room Main Wire and Driver Side J/B (Lower Finish Panel)
1L	26	Instrument Panel Wire and Driver Side J/B (Lower Finish Panel)
2B	30	Engine Wire and Engine Room J/B (Engine Compartment Left)
2C	30	Engine Room Main Wire and Engine Room J/B (Engine Compartment Left)
2D		
2F		
3A	34	Cowl Wire and J/B No.3 (Left Kick Panel)
3B		
3C		
3F	35	Instrument Panel Wire and J/B No.3 (Left Kick Panel)
3G		
3H	35	Cowl Wire and J/B No.3 (Left Kick Panel)
4A	38	Cowl Wire and J/B No.4 (Right Kick Panel)
4B		
4C		
4F	39	Instrument Panel Wire and J/B No.4 (Right Kick Panel)
4H		

: CONNECTOR JOINING WIRE HARNESS AND WIRE HARNESS

Code	See Page	Joining Wire Harness and Wire Harness (Connector Location)
IC1	56 (Column Shift) 60 (Floor Shift)	Cowl Wire and Instrument Panel Wire (Left Kick Panel)
IF1	56 (Column Shift) 60 (Floor Shift)	Engine Room Main Wire and Cowl Wire (Left Side of Instrument Panel)
IF3	56 (Column Shift) 60 (Floor Shift)	
IJ1	58 (Column Shift) 62 (Floor Shift)	Engine Wire and Instrument Panel Wire (Right Kick Panel)
IL1	58 (Column Shift) 62 (Floor Shift)	Cowl Wire and Instrument Panel Wire (Right Kick Panel)

: GROUND POINTS

Code	See Page	Ground Points Location
EB	54	Surge Tank RH
ED	54	Front Side of Left Fender
IF	56 (Column Shift) 60 (Floor Shift)	Left Kick Panel
II	56 (Column Shift) 60 (Floor Shift)	Right Kick Panel
IJ	56 (Column Shift) 60 (Floor Shift)	Cowl Side Panel RH

: SPLICE POINTS

Code	See Page	Wire Harness with Splice Points	Code	See Page	Wire Harness with Splice Points
I13	58 (Column Shift)	Cowl Wire	I13	62 (Floor Shift)	Cowl Wire

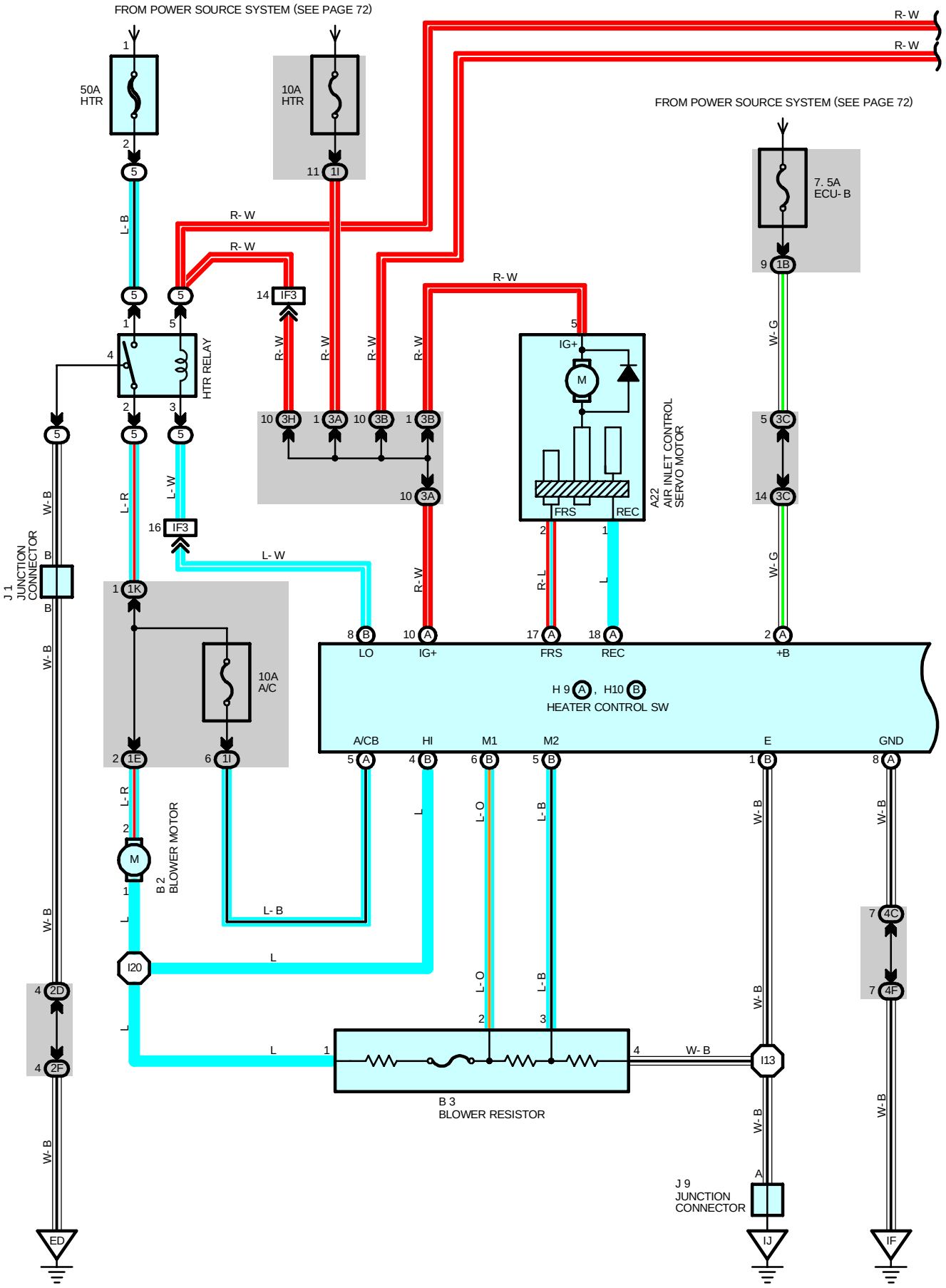
FROM POWER SOURCE SYSTEM (SEE PAGE 72)
R- W
R- W
50A HTR
10A HTR
FROM POWER SOURCE SYSTEM (SEE PAGE 72)
7. 5A ECU- B
L- B
R- W
R- W
HTR RELAY
IF3
IG+
M
FRS
REC
A22 AIR INLET CONTROL SERVO MOTOR
W- G
L- R
L- W
J 1 JUNCTION CONNECTOR
W- B
10A A/C
LO
IG+
FRS
REC
+B
H 9 (A) , H10 (B)
HEATER CONTROL SW
A/CB
HI
M1
M2
E
GND
B 2 BLOWER MOTOR
L- O
L- B
I20
B 3 BLOWER RESISTOR
I13
J 9 JUNCTION CONNECTOR
ED
IJ
IF

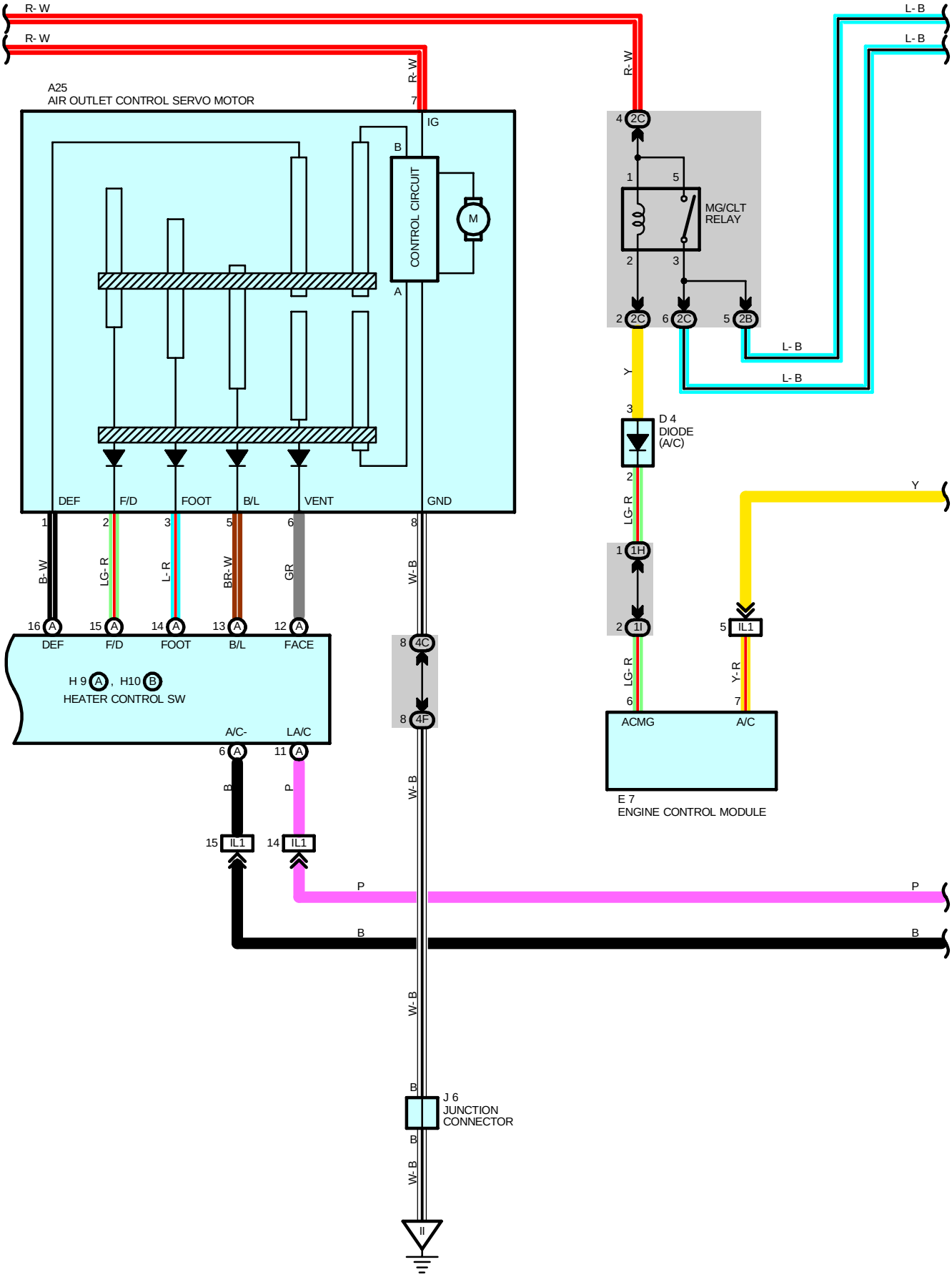
R- W
R- W
R- W
A25
AIR OUTLET CONTROL SERVO MOTOR
7
IG
B
CONTROL CIRCUIT
M
A
DEF
F/D
FOOT
B/L
VENT
GND
1
2
3
5
6
8
B- W
LG- R
L- R
BR- W
GR
W- B
16 A
15 A
14 A
13 A
12 A
DEF
F/D
FOOT
B/L
FACE
H 9 A , H10 B
HEATER CONTROL SW
A/C-
LA/C
6 A
11 A
B
P
15 IL1
14 IL1
8 4C
8 4F
W- B
P
B
W- B
B
J 6
JUNCTION
CONNECTOR
B
W- B
R- W
4 2C
1
5
MG/CLT
RELAY
2
3
2 2C
6 2C
5 2B
L- B
L- B
L- B
Y
3
D 4
DIODE
(A/C)
2
LG- R
1 1H
2 1I
LG- R
6
ACMG
Y
5 IL1
Y- R
7
A/C
E 7
ENGINE CONTROL MODULE
P
B

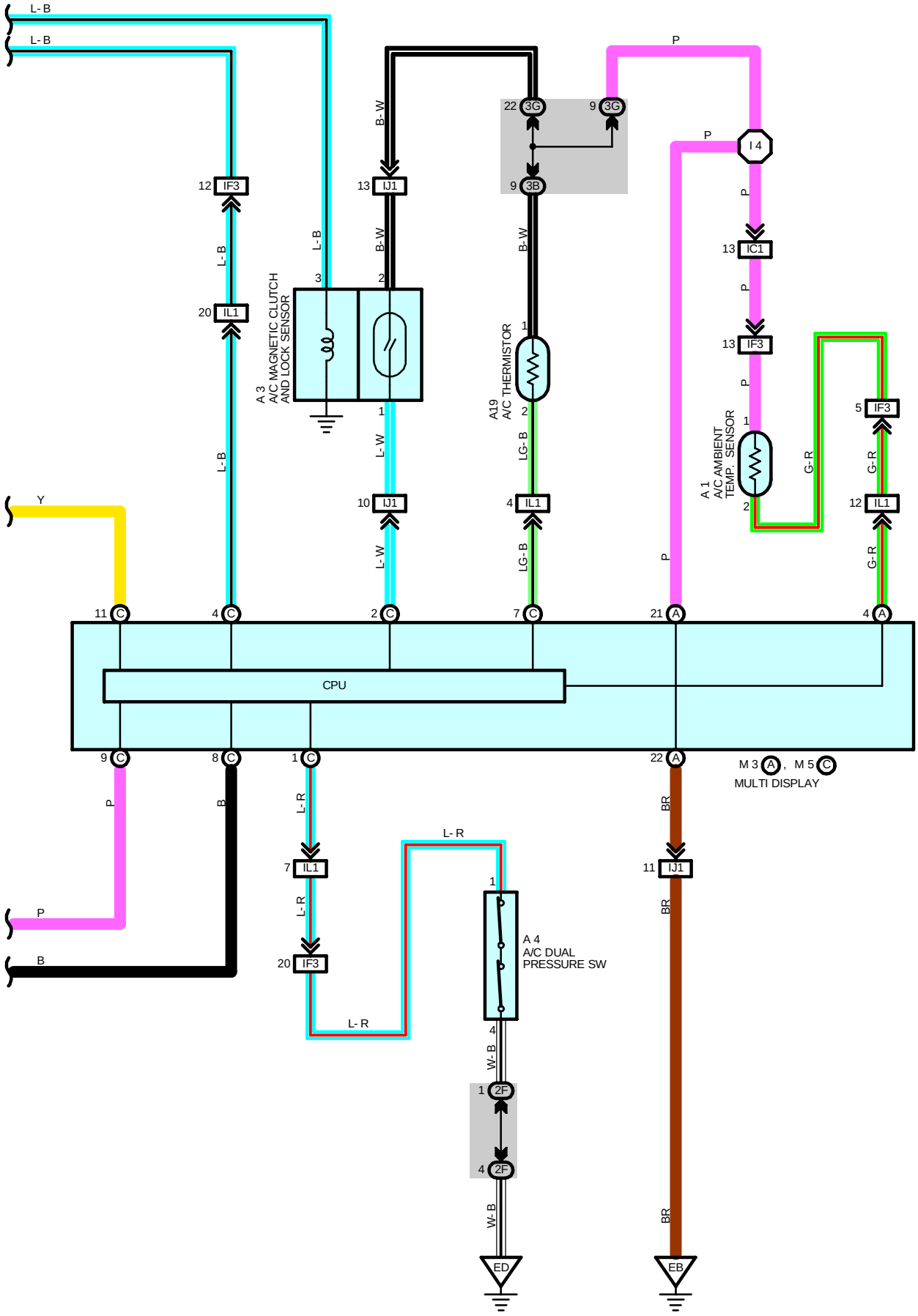
L- B
L- B
12 IF3
20 IL1
L- B
L- B
L- B
3
2
A 3
A/C MAGNETIC CLUTCH
AND LOCK SENSOR
1
13 IJ1
B- W
B- W
10 IJ1
L- W
L- W
22 3G
9 3G
9 3B
B- W
1
2
A19
A/C THERMISTOR
LG- B
4 IL1
LG- B
P
P
I 4
P
13 IC1
P
13 IF3
P
1
2
A 1
A/C AMBIENT
TEMP. SENSOR
G- R
5 IF3
G- R
12 IL1
G- R
Y
11 C
4 C
2 C
7 C
21 A
4 A
CPU
9 C
8 C
1 C
22 A
M 3 A , M 5 C
MULTI DISPLAY
P
B
P
B
L- R
7 IL1
L- R
20 IF3
L- R
L- R
1
A 4
A/C DUAL
PRESSURE SW
4
W- B
1 2F
4 2F
W- B
ED
BR
11 IJ1
BR
BR
EB

SERVICE HINTS

A3 A/C DUAL PRESSURE SW

1-4 : Open above approx. **2.0** kgf/cm^2 (**29** psi, **196** kpa) or **32** kgf/cm^2 (**464** psi, **3140** kpa)

H9 (A), H10 (B) HEATER CONTROL SW

+B-GROUND : Always approx. **12** volts
IG+-GROUND : Approx. **12** volts with the ignition SW at **ON** position
REC-GROUND : Approx. **12** volts with RECIRC SW on
FRS-GROUND : Approx. **12** volts with FRESH SW on
E-GROUND : Always continuity
GND-GROUND : Always continuity

: PARTS LOCATION

Code	See Page	Code	See Page	Code	See Page
A1	44	B3	46 (Column Shift)	J1	49 (Floor Shift)
A3	44		48 (Floor Shift)	J6	47 (Column Shift)
A4	44	D4	46 (Column Shift)		49 (Floor Shift)
A19	46 (Column Shift)		48 (Floor Shift)	J9	47 (Column Shift)
	48 (Floor Shift)	E7	46 (Column Shift)		49 (Floor Shift)
A22	46 (Column Shift)		48 (Floor Shift)	M3 A	47 (Column Shift)
	48 (Floor Shift)	H9 A	47 (Column Shift)		49 (Floor Shift)
A25	46 (Column Shift)		49 (Floor Shift)	M5 C	47 (Column Shift)
	48 (Floor Shift)	H10 B	47 (Column Shift)		49 (Floor Shift)
B2	46 (Column Shift)		49 (Floor Shift)		
	48 (Floor Shift)	J1	47 (Column Shift)		

: RELAY BLOCKS

Code	See Page	Relay Blocks (Relay Block Location)
5	25	Engine Room R/B No.5 (Engine Compartment Left)

: JUNCTION BLOCK AND WIRE HARNESS CONNECTOR

Code	See Page	Junction Block and Wire Harness (Connector Location)
1B	27	Cowl Wire and Driver Side J/B (Lower Finish Panel)
1E		
1H	27	Engine Room Main Wire and Driver Side J/B (Lower Finish Panel)
1I	27	Cowl Wire and Driver Side J/B (Lower Finish Panel)
1K	27	Engine Room Main Wire and Driver Side J/B (Lower Finish Panel)
2B	30	Engine Wire and Engine Room J/B (Engine Compartment Left)
2C	30	Engine Room Main Wire and Engine Room J/B (Engine Compartment Left)
2D		
2F		
3A	34	Cowl Wire and J/B No.3 (Left Kick Panel)
3B		
3C		
3G	35	Instrument Panel Wire and J/B No.3 (Left Kick Panel)
3H	35	Cowl Wire and J/B No.3 (Left Kick Panel)
4C	38	Cowl Wire and J/B No.4 (Right Kick Panel)
4F	39	Instrument Panel Wire and J/B No.4 (Right Kick Panel)

: CONNECTOR JOINING WIRE HARNESS AND WIRE HARNESS

Code	See Page	Joining Wire Harness and Wire Harness (Connector Location)
IC1	56 (Column Shift) 60 (Floor Shift)	Cowl Wire and Instrument Panel Wire (Left Kick Panel)
IF3	56 (Column Shift) 60 (Floor Shift)	Engine Room Main Wire and Cowl Wire (Left Side of Instrument Panel)
IJ1	58 (Column Shift) 62 (Floor Shift)	Engine Wire and Instrument Panel Wire (Right Kick Panel)
IL1	58 (Column Shift) 62 (Floor Shift)	Cowl Wire and Instrument Panel Wire (Right Kick Panel)

: GROUND POINTS

Code	See Page	Ground Points Location
EB	54	Surge Tank RH
ED	54	Front Side of Left Fender
IF	56 (Column Shift) 60 (Floor Shift)	Left Kick Panel
II	56 (Column Shift) 60 (Floor Shift)	Right Kick Panel
IJ	56 (Column Shift) 60 (Floor Shift)	Cowl Side Panel RH

: SPLICE POINTS

Code	See Page	Wire Harness with Splice Points	Code	See Page	Wire Harness with Splice Points
I4	58 (Column Shift) 62 (Floor Shift)	Cowl Wire	I13	62 (Floor Shift)	Cowl Wire
I13	58 (Column Shift)		I20	58 (Column Shift) 62 (Floor Shift)	

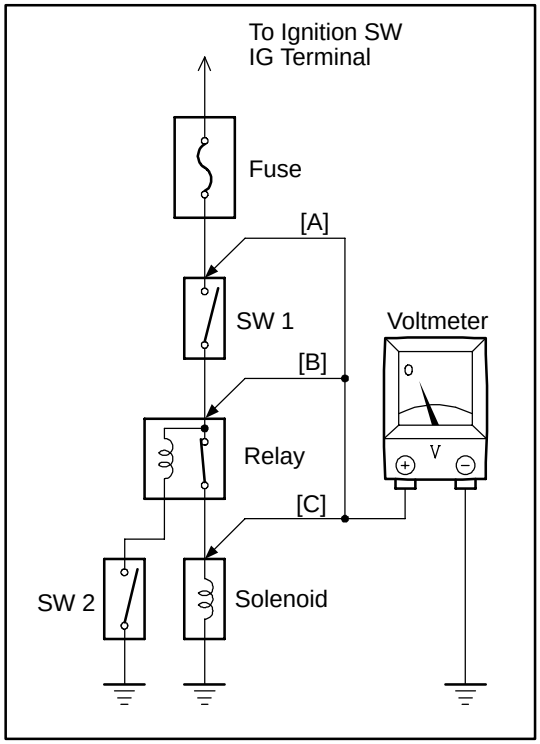

VOLTAGE CHECK

(a) Establish conditions in which voltage is present at the check point.

Example:
[A] - Ignition SW on
[B] - Ignition SW and SW 1 on
[C] - Ignition SW, SW 1 and Relay on (SW 2 off)

(b) Using a voltmeter, connect the negative lead to a good ground point or negative battery terminal, and the positive lead to the connector or component terminal.
This check can be done with a test light instead of a voltmeter.

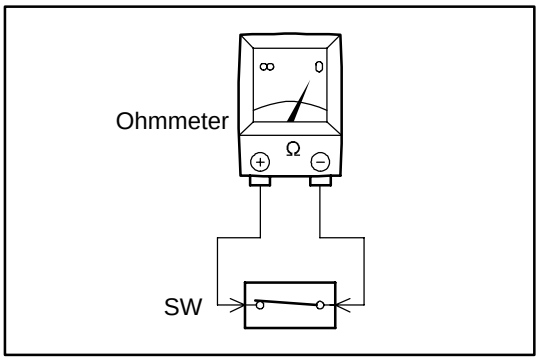

CONTINUITY AND RESISTANCE CHECK

(a) Disconnect the battery terminal or wire so there is no voltage between the check points.

(b) Contact the two leads of an ohmmeter to each of the check points.

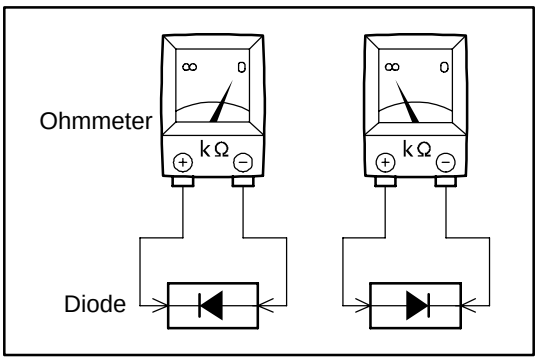

If the circuit has diodes, reverse the two leads and check again.
When contacting the negative lead to the diode positive side and the positive lead to the negative side, there should be continuity.
When contacting the two leads in reverse, there should be no continuity.

(c) Use a volt/ohmmeter with high impedance (10 kΩ/V minimum) for troubleshooting of the electrical circuit.

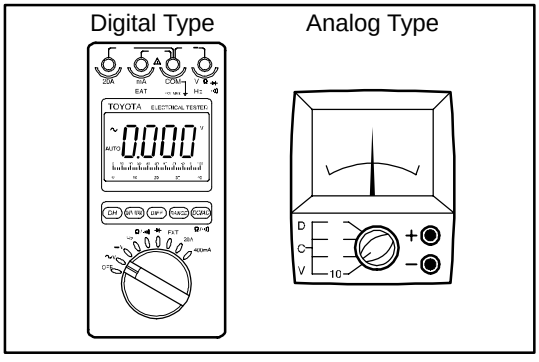

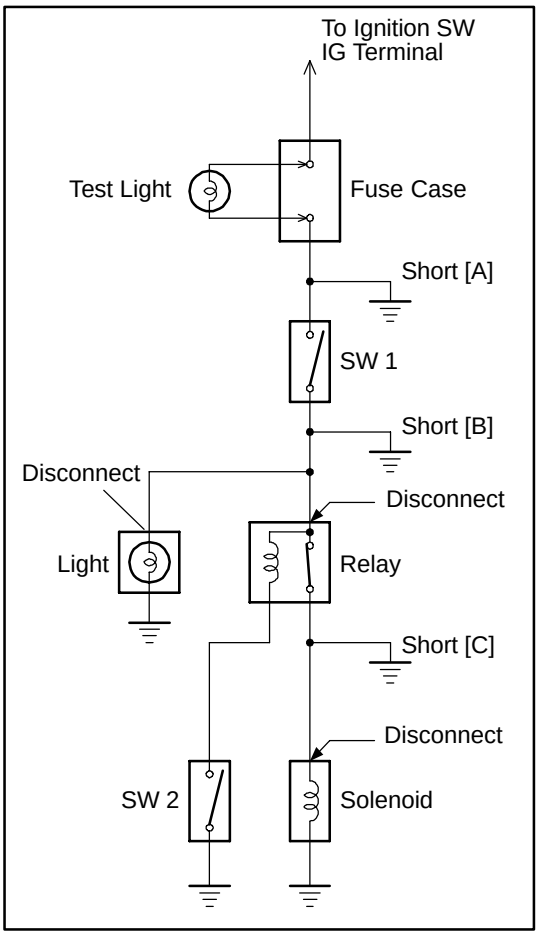

FINDING A SHORT CIRCUIT

(a) Remove the blown fuse and disconnect all loads of the fuse.

(b) Connect a test light in place of the fuse.

(c) Establish conditions in which the test light comes on.

Example:

[A] - Ignition SW on
[B] - Ignition SW and SW 1 on
[C] - Ignition SW, SW 1 and Relay on (Connect the Relay) and SW 2 off (or Disconnect SW 2)

(d) Disconnect and reconnect the connectors while watching the test light.
The short lies between the connector where the test light stays lit and the connector where the light goes out.

(e) Find the exact location of the short by lightly shaking the problem wire along the body.

CAUTION:

(a) Do not open the cover or the case of the ECU unless absolutely necessary. (If the IC terminals are touched, the IC may be destroyed by static electricity.)

(b) When replacing the internal mechanism (ECU part) of the digital meter, be careful that no part of your body or clothing comes in contact with the terminals of leads from the IC, etc. of the replacement part (spare part).

DISCONNECTION OF MALE AND FEMALE CONNECTORS

To pull apart the connectors, pull on the connector itself, not the wire harness.

HINT : Check to see what kind of connector you are disconnecting before pulling apart.

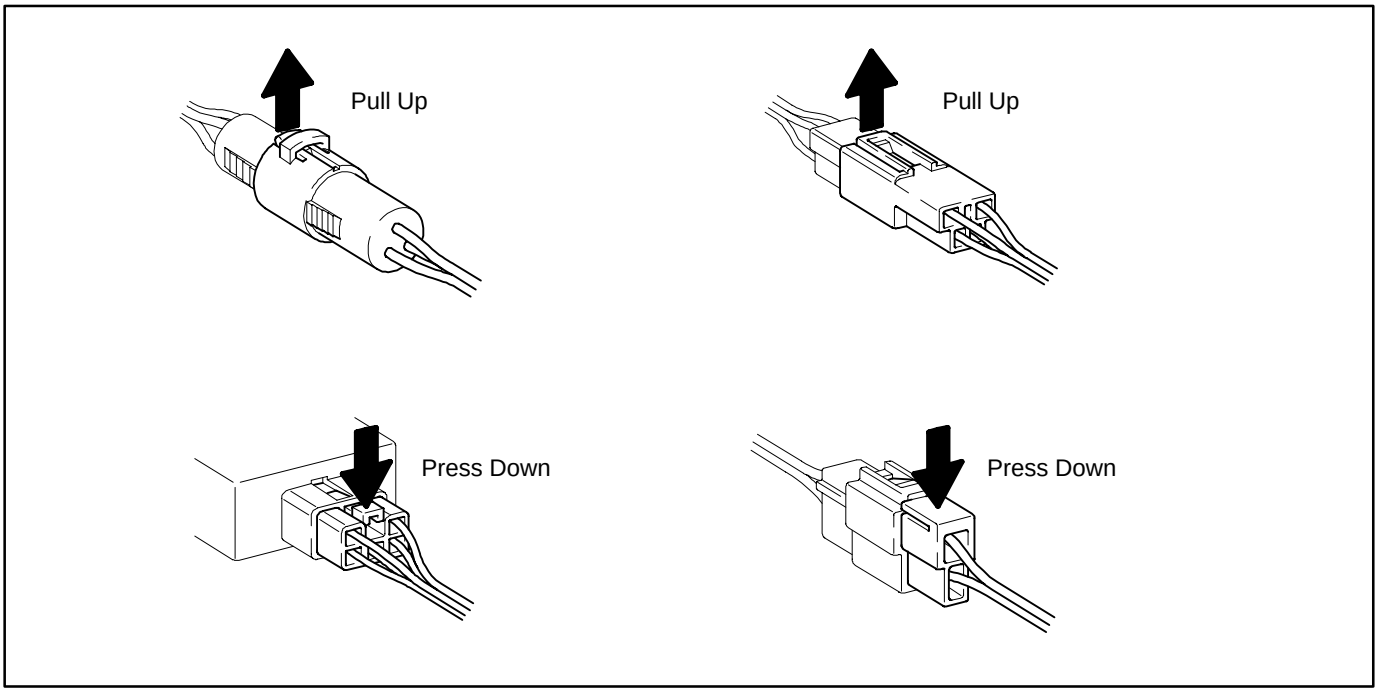

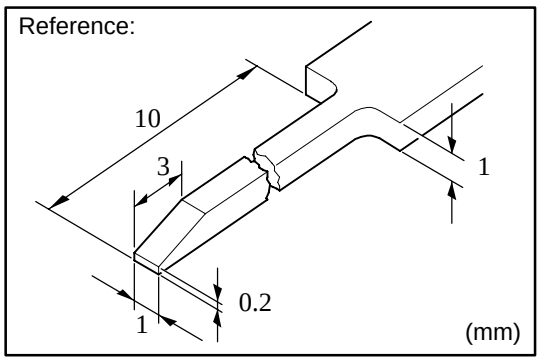

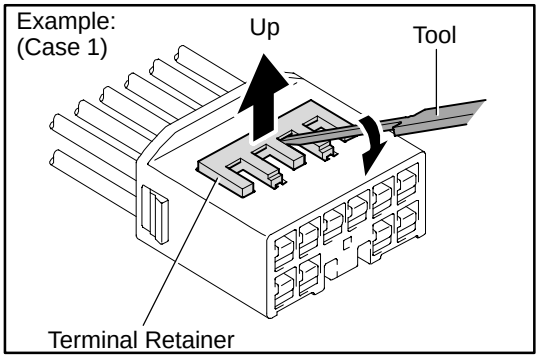

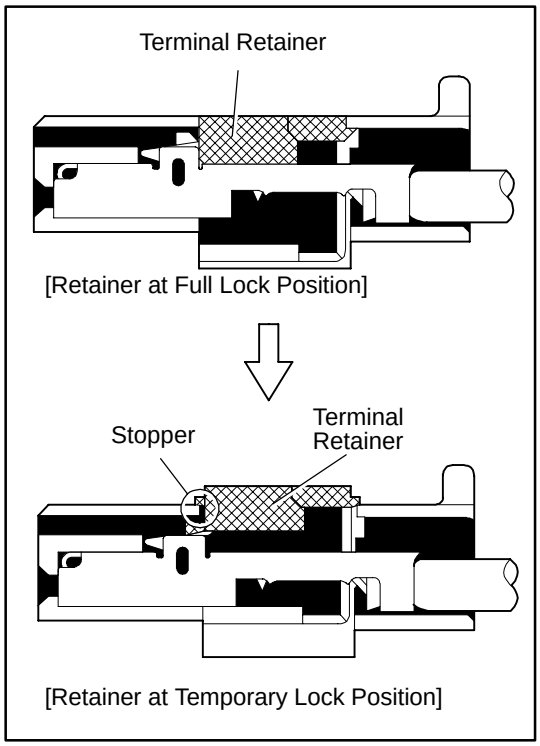

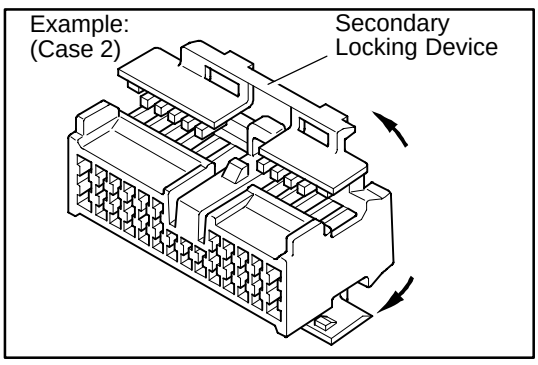

HOW TO REPLACE TERMINAL (with terminal retainer or secondary locking device)

1. PREPARE THE SPECIAL TOOL

   HINT : To remove the terminal from the connector, please construct and use the special tool or like object shown on the left.

2. DISCONNECT CONNECTOR

3. DISENGAGE THE SECONDARY LOCKING DEVICE OR TERMINAL RETAINER.

   (a) Locking device must be disengaged before the terminal locking clip can be released and the terminal removed from the connector.

   (b) Use a special tool or the terminal pick to unlock the secondary locking device or terminal retainer.

   NOTICE:
   Do not remove the terminal retainer from connector body.

   [A] For Non-Waterproof Type Connector

   HINT : The needle insertion position varies according to the connector's shape (number of terminals etc.), so check the position before inserting it.

   "Case 1"

   Raise the terminal retainer up to the temporary lock position.

   "Case 2"

   Open the secondary locking device.

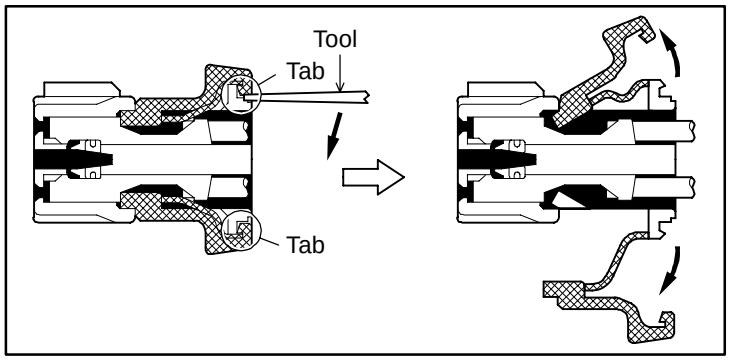

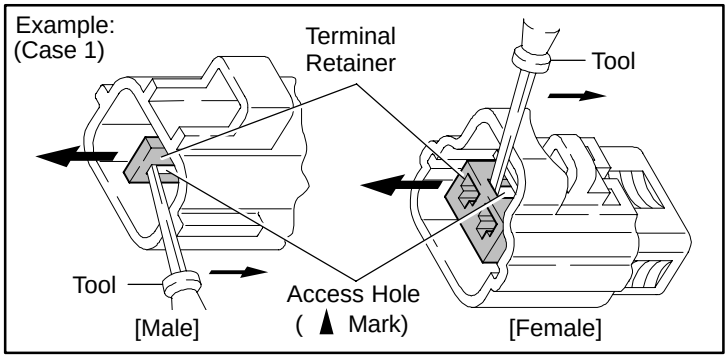

[B] For Waterproof Type Connector

HINT : Terminal retainer color is different according to connector body.

Example:

Terminal Retainer	: Connector Body
Black or White	: Gray
Black or White	: Dark Gray
Gray or White	: Black

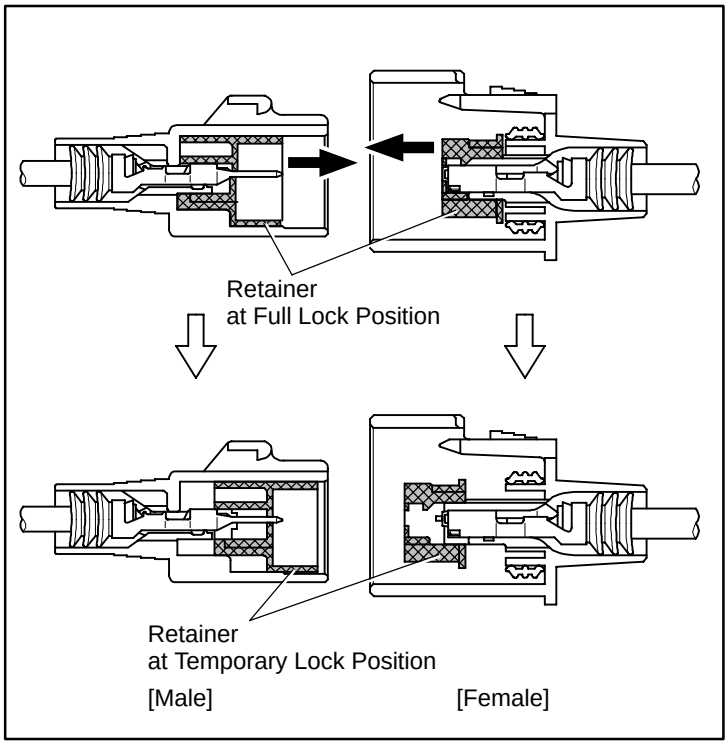

”Case 1”

Type where terminal retainer is pulled up to the temporary lock position (Pull Type).

Insert the special tool into the terminal retainer access hole (▲Mark) and pull the terminal retainer up to the temporary lock position.

HINT : The needle insertion position varies according to the connector’s shape (Number of terminals etc.), so check the position before inserting it.

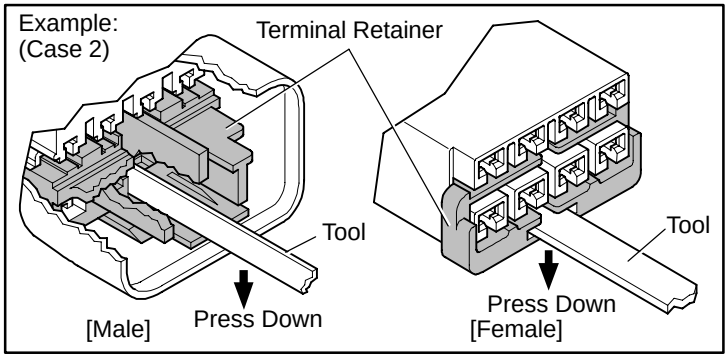

”Case 2”

Type which cannot be pulled as far as Power Lock insert the tool straight into the access hole of terminal retainer as shown.

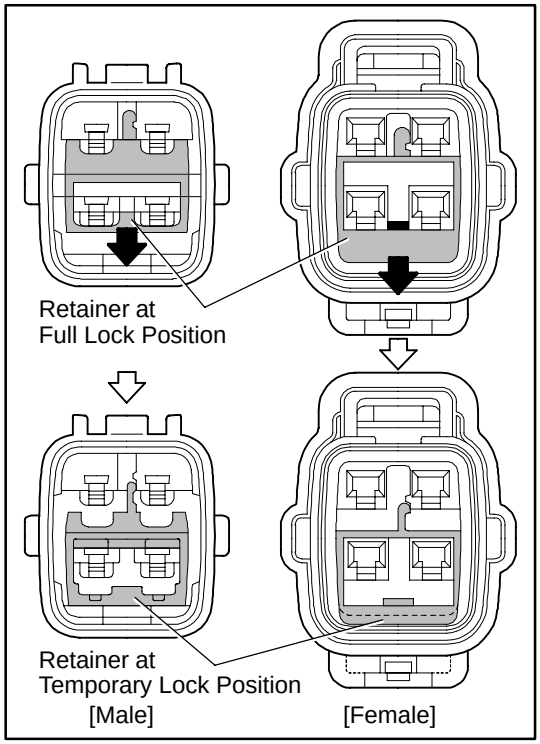

Push the terminal retainer down to the temporary lock position.

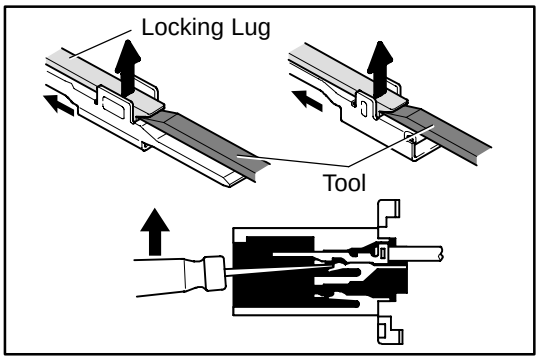

(c) Release the locking lug from terminal and pull the terminal out from rear.

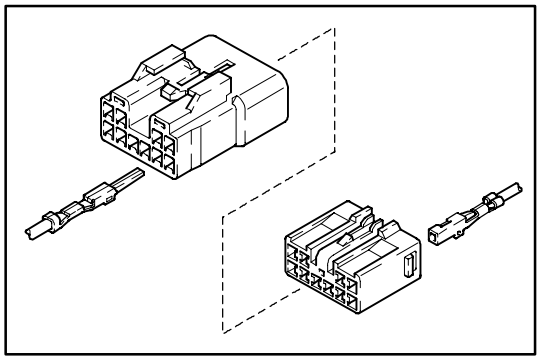

4. INSTALL TERMINAL TO CONNECTOR

(a) Insert the terminal.

HINT:
1. Make sure the terminal is positioned correctly.
2. Insert the terminal until the locking lug locks firmly.
3. Insert the terminal with terminal retainer in the temporary lock position.

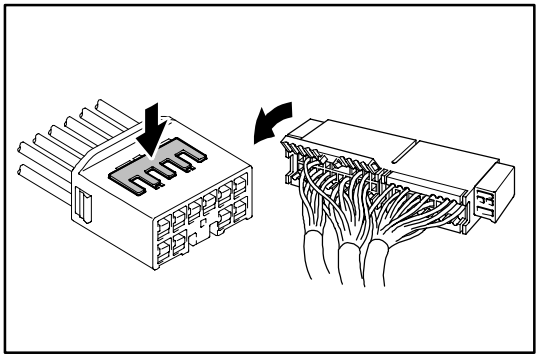

(b) Push the secondary locking device or terminal retainer in to the full lock position.

5. CONNECT CONNECTOR